| REV | DESCRIPTION | DRAWN | DATE |
|---|---|---|---|
| | | APPROVED | DATE |
| | ER 6063 | KDE | 1/19/07 |
| | | | |

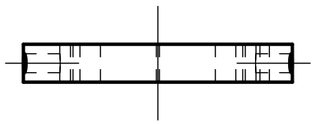

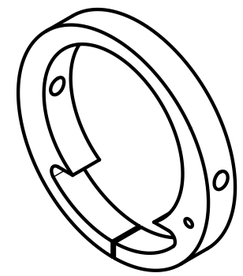

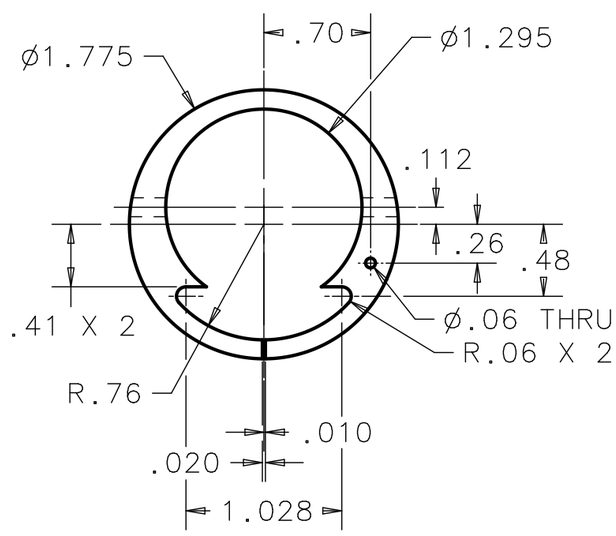


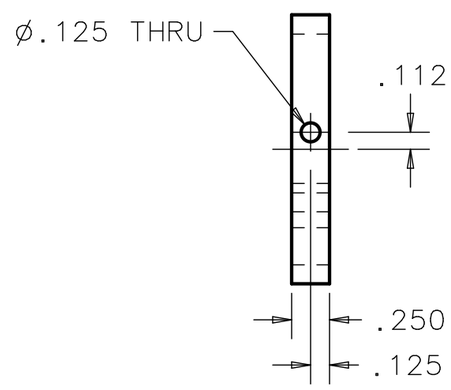


| UNLESS OTHERWISE SPECIFIED | | | ORIGINATOR | C.BOFFO | 19-JAN-2007 |
|---|---|---|---|---|---|
| .XX | .XXX | ANGLES | DRAWN | K.EWALD | 19-JAN-2007 |
| ± .01 | ± .005 | ± .5° | CHECKED | | |
| 1. BREAK ALL SHARP EDGES MAX. | | | APPROVED | | |
| 2. DO NOT SCALE DRAWING. | | | USED ON | | |
| 3. DIMENSIONS BASED UPON ASME Y14.5M-1994 | | | | | |
| 4. MAX. ALL MACH. SURFACES 125 | | | MATERIAL | TEFLON | |
| 5. DRAWING UNITS: U.S. INCH | | | | | |

FERMI NATIONAL ACCELERATOR LABORATORY
UNITED STATES DEPARTMENT OF ENERGY

# ANL-FNAL JOINT FACILITY
# EP STATION
# 1.3GHZ CATHODE BAG SPACER

| SCALE | DRAWING NUMBER | SHEET | REV |
|---|---|---|---|
| 1:1 | 5525.000-MB-442397 | 1 OF 1 | |

CREATED WITH : Ideas12NXSeries | GROUP: TD/DDCIS-DESIGN-COMPUTING

Created: 07:21:33 on 24-01-07 (D-M-Y) By: ewald State: 1-INITIAL