REV	DESCRIPTION	DRAWN	DATE
		APPROVED	DATE
	E.R. NO. 6063		

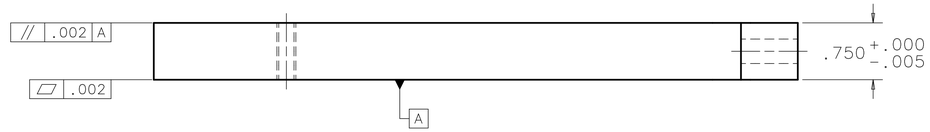

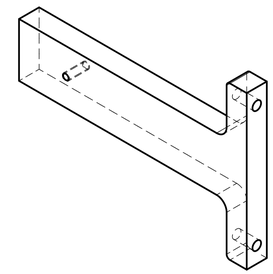

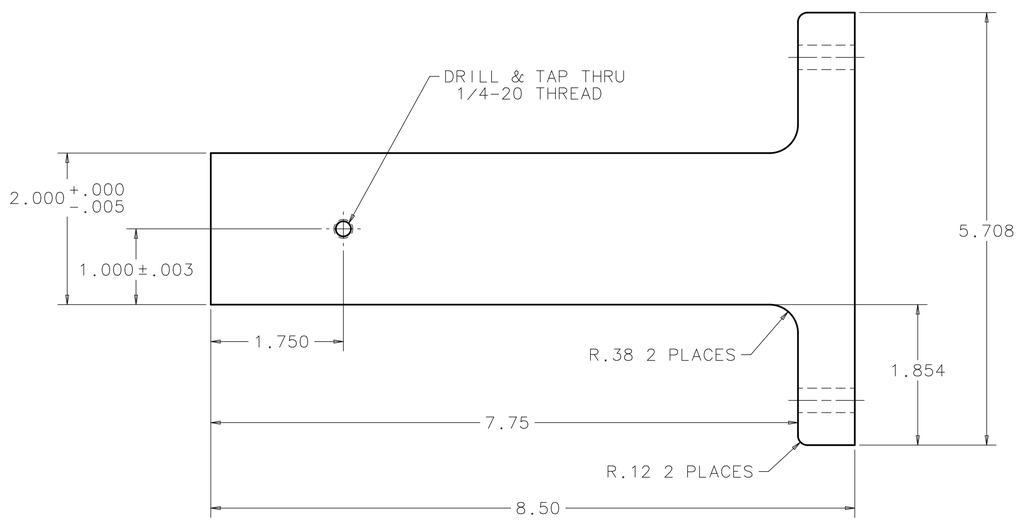

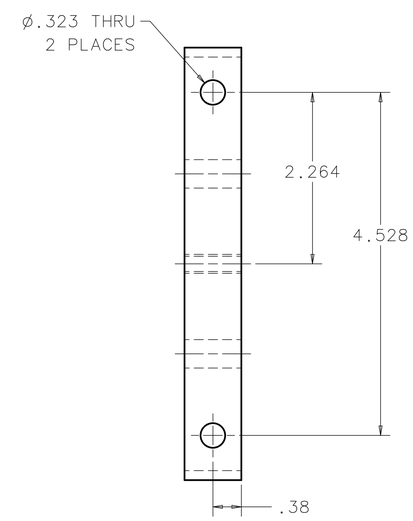

UNLESS OTHERWISE SPECIFIED			ORIGINATOR	C.BOFFO	
.XX	.XXX	ANGLES	DRAWN	K.EWALD	
± .01	± .005	± .1	CHECKED		
1. BREAK ALL SHARP EDGES MAX.			APPROVED		
2. DO NOT SCALE DRAWING.			USED ON		
3. DIMENSIONS BASED UPON ASME Y14.5M-1994					
4. MAX. ALL MACH. SURFACES 125			MATERIAL	ALUMINUM 6061-T6	
5. DRAWING UNITS: U.S. INCH					

FERMI NATIONAL ACCELERATOR LABORATORY
UNITED STATES DEPARTMENT OF ENERGY

CATHODE EXTRACTOR ASSEMBLY
CATHODE CLAMP ASSEMBLY
CATHODE EXTRACTOR LEVER ARM

SCALE	DRAWING NUMBER	SHEET	REV
1:1	5525.000-MD-442385	1 OF 1	

CREATED WITH : Ideas12NXSeries GROUP: TD/DDCIS-DESIGN-COMPUTING