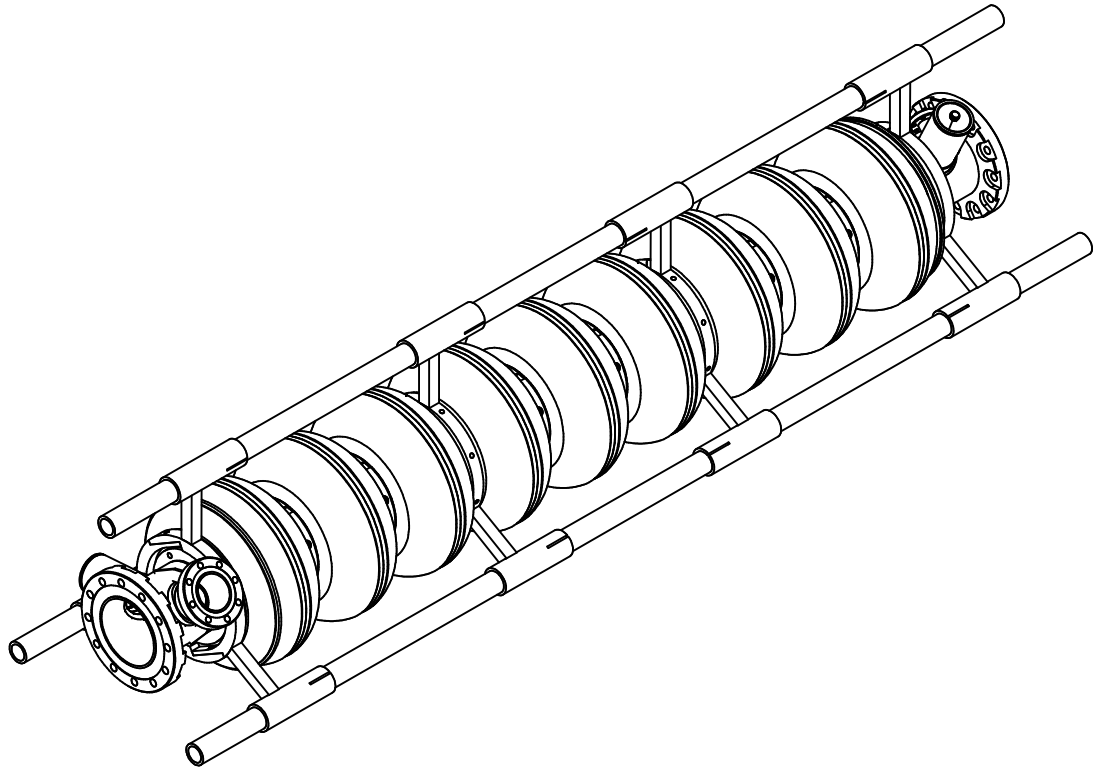

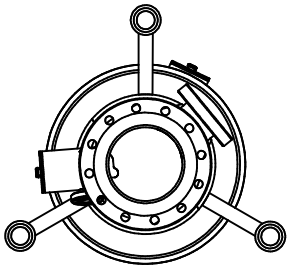

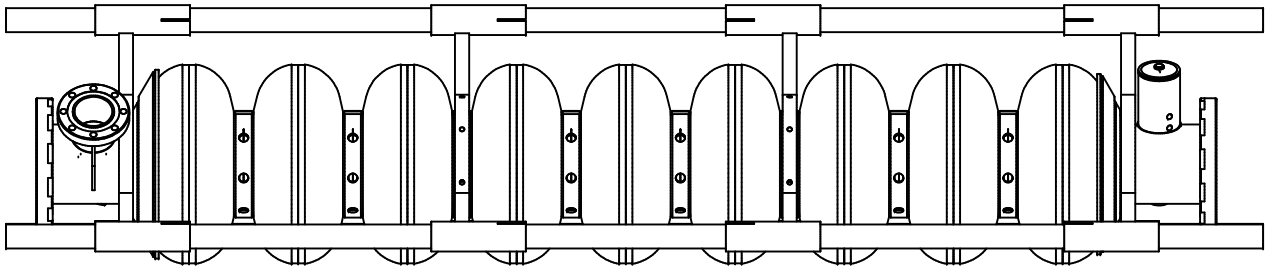

ITEM NO.	NEXT ASSEMBLY	QTY REQD

THIS DRAWING IS THE PROPERTY OF

ARGONNE NATIONAL LABORATORY

TITLE

SUPPORT ASSEMBLY AND CAVITY

RECORD NUMBER			
DRAWN BY S.M.GERBICK	DATE 1/11/2007	GP LEADER	DATE
CHECKED		PROJECT MGR	
RESPONSIBLE ENGINEER		APVD/RELEASED	
MATERIAL		DO NOT SCALE DRAWING	SCALE 1=4

SHEET 1 OF 1 | DRAWING NUMBER | REV

UNLESS OTHERWISE NOTED

ALL DIMENSIONS ARE INCHES

DECIMAL TOLERANCE

.X ±.1

.XX ±.02

.XXX ±.005

ANGULAR TOL ±1/2

FRACTIONAL TOL 1/64

REMOVE ALL BURRS AND SHARP EDGES

SURFACES TO BE IN ACCORDANCE WITH LATEST ANSI B46.1

DIMENSIONS & TOLERANCES IN ACCORDANCE WITH LATEST ASME Y14.5M

SYM	CHANGE	BY	CHKD	DATE	APVD	DATE

MICRO-FILMED DATE