Vacuum Vessel Engineering Note For the Jetline VC-72 Welding Glovebox at MP9

Authors: M. Wong, B. Wands	Date: 23 December 2009

CONTENTS

Descriptions	*Page*
Vacuum Vessel Engineering Note (per Fermilab ES&H Manual Chapter 5033)	**3**
Appendix A – Engineering Note	
1.0 Description and Identification	5
2.0 Geometry	5
3.0 Material Properties	12
4.0 Design Verification	13
5.0 Dome Loading and Failure Modes	15
5.1 Collapse – Closed Form Approximations	15
5.1.1 Ideal Collapse Pressure	15
5.1.2 Probable Actual Minimum Collapse Pressure	15
5.1.3 Collapse Pressure of a Spherical Cap	16
5.2 Collapse – Finiate Element Linear (Bifurcation) Buckling	16
5.2.1 Full Sphere	16
5.2.2 Spherical Cap	17
5.3 Assessing the Collapse Calculation Results	19
6.0 Required Thickness of Spherical Shell due to Internal Pressure	21
7.0 ASME Code Calculations	22
7.1 Required Thickness of Cylindrical Shell	22
7.2 Required Thickness of Bottom Plate	23
8.0 2-d Finite Element Model of Glove Box	24
8.1 Verification	24
8.2 Displacements	25
8.3 Stresses in the Vessel Flanges	26
8.4 Stresses in the Upper Shell/Flange Junction	27
8.5 Stresses in Lower Flange/Shell Junction	29
8.6 Stresses in Dome Flange	30
8.7 Stresses in Bottom Plate	31
8.8 Reinforcement of Penetrations	32
8.8.1 Penetrations in the Acrylic Dome	32
8.8.2 Penetrations in the Cylindrical Shell	32
8.8.3 Penetration in the Bottom Plate	33
9.0 System Relief Verification	34
9.1 Set Pressure of the Exhaust Valve	37
10.0 Operating Procedures	37
11.0 Welding Information	37
Appendix B – Operating Procedures	**38**
Appendix C – Vacuum Test	**40**
References	**41**
Amendment 1	**42**

Vacuum Vessel Engineering Note
(per Fermilab ES&H Manual Chapter 5033)

Prepared by	Mayling Wong	Date	24-Mar-2009	Div/Sec	TD/SRF Dev.
	Bob Wands				PPD/MD/EA
Reviewed by	Michael Sarychev	Date	24-Mar-2009	Div/Sec	PPD/MD/D0
Div/Sec Head		Date		Div/Sec	

1. Identification and Verification of Compliance

Fill in the Fermilab Engineering Conformance Label information below:

This vessel conforms to Fermilab ES&H Manual Chapter 5033

Vessel Title	MP9 Welding Glovebox
Vessel Number	IND-131
Vessel Drawing Number	Jetline Drawing VC-72-77364
Internal MAWP	3.0 psi
External MAWP	14.7 psi
Working Temperature Range	60 °F 80 °F
Design/Manufacturer	Jetline Engineering
Date of Manufacture	December 2008
Acceptance Date	January 2009

Director's signature (or designee) if vessel is for manned area and requires an exception to the provisions of this chapter.

Amendment No.	Reviewed by:	Date:
1	Michael Sarychev	23-Dec-2009

Laboratory location code	FIMS #416
Laboratory property number	---
Purpose of vessel	Provides oxygen-free environment for welding titatnium assemblies for the 1.3-GHz SRF dressed cavities

List all pertinent drawings

Drawing No.	Location of Original
VC-72-77364	Jetline Engineering
79230-72-ri-ASS	Jetline Engineering

Electronic copies of all drawings are placed in the ILC Document Management System online: http://ilc-dms.fnal.gov/Workgroups/CryomoduleDocumentation/mp9-glove-box/

2. Design Verification

See design calculations in the Note's Appendix A.

3. System Venting Verification

Can this vessel be pressurized either internally or externally? [X] Yes [ ] No
If "Yes", to what pressure? Internal MAWP < 1.0 psig

List all reliefs and settings. Provide a schematic of the relief system components and appropriate calculations or test results to prove that the vessel will not be subjected to pressures greater than 110% beyond the maximum allowable internal or external pressure.

Manufacturer	**Relief**	**Pressure Setting**	**Flow Rate**	**Size**
Jetline Engineering	Exhaust Valve	0.31 psi	<330 CFH Ar	1.25-inch

Relief valve shown in schematic (Figure A23)

4. Operating Procedure Section

Is an operating procedure necessary for the safe operation of this vessel?
[ ] Yes [X] No *(If "Yes", it must be appended)*

Is a testing procedure necessary for the safe acceptance testing (acceptance testing) of this vessel?
[ ] Yes [X] No
If "Yes", the written procedure must be approved by the division head prior to testing and supplied with this Engineering Note.

5. Welding Information

Is the vessel code-stamped? [ ] Yes [X] No
If "No," append WPS, PQR, and WPQ.

6. Exceptional, Existing, Used and Non-Manned Area Vessels

Is this vessel or any part thereof in the above categories? [ ]Yes [X] No
If "Yes" follow the Engineering Note requirements for documentation and append to note.

Appendix A – Engineering Note

1.0 Description and Identification

A welding glovebox has been manufactured to weld the assemblies for the titanium vessel of the 1.3-GHz SRF dressed cavities. The glove box provides an oxygen-free environment for titanium welding. Low-pressure argon is pumped into the glovebox during operation. To speed up the removal of oxygen, the glove box is evacuated. The welding glove box is located at MP9.

This engineering note shows that the glove box conforms to FESHM 5033 - "Vacuum Vessel Safety." [1] The vacuum vessel is designed to the pressures and temperatures shown in Table A1:

Table A1 – Design and Operating Pressures and Temperatures

	Design	Operating
External pressure (psig)	14.7	0.0
Internal pressure (psig)	< 1.0	<0.1
Minimum temperature (°F)	60	Room temperature
Maximum temperature (°F)	80	Room temperature

Table A2 lists all available drawings from the vendor. The original drawings are located at the vendor. Figure A1 shows the top-level drawing of the glove box (VC-72-77364). A PDF file of the drawings is also included online in the MP9 Glovebox folder of the ILC Document Management System:

http://ilc-dms.fnal.gov/Workgroups/CryomoduleDocumentation/mp9-glove-box/

Table A2 – Engineering Drawings for the Vacuum Vessel of CM1

Drawing No.	Rev.	Title
VC-72-77364	-	Vacuum Chamber – 72" with Turntable & ZB75
730-72-1	-	Dome – Vacuum Assist Welding Chamber
730-72-2B	-	13-1/2 Riser for 72" VC

2.0 Geometry

The geometry of the vessel was taken from Jetline drawings #VC-72-77364 (Figure A1) and #730-72-1 (Figure A2). The geometry of the riser was taken from Jetline drawing #730-72-2B (Figure A3). Not all vessel dimensions are available from these drawings; some were measured manually after the dome was removed from the vessel.

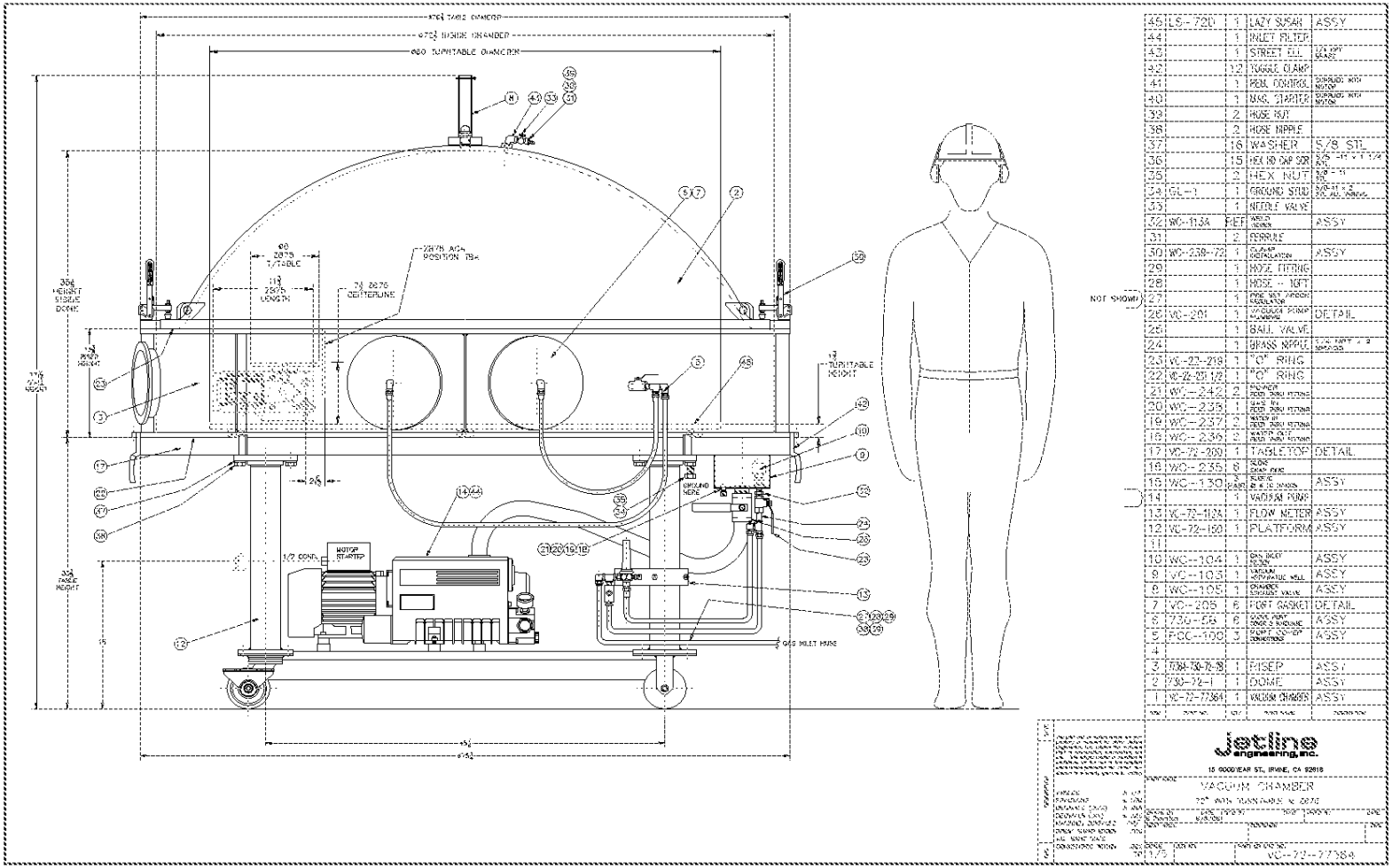

Figure A1 – Jetline Welding Glovebox (Drawing VC-72-77364)

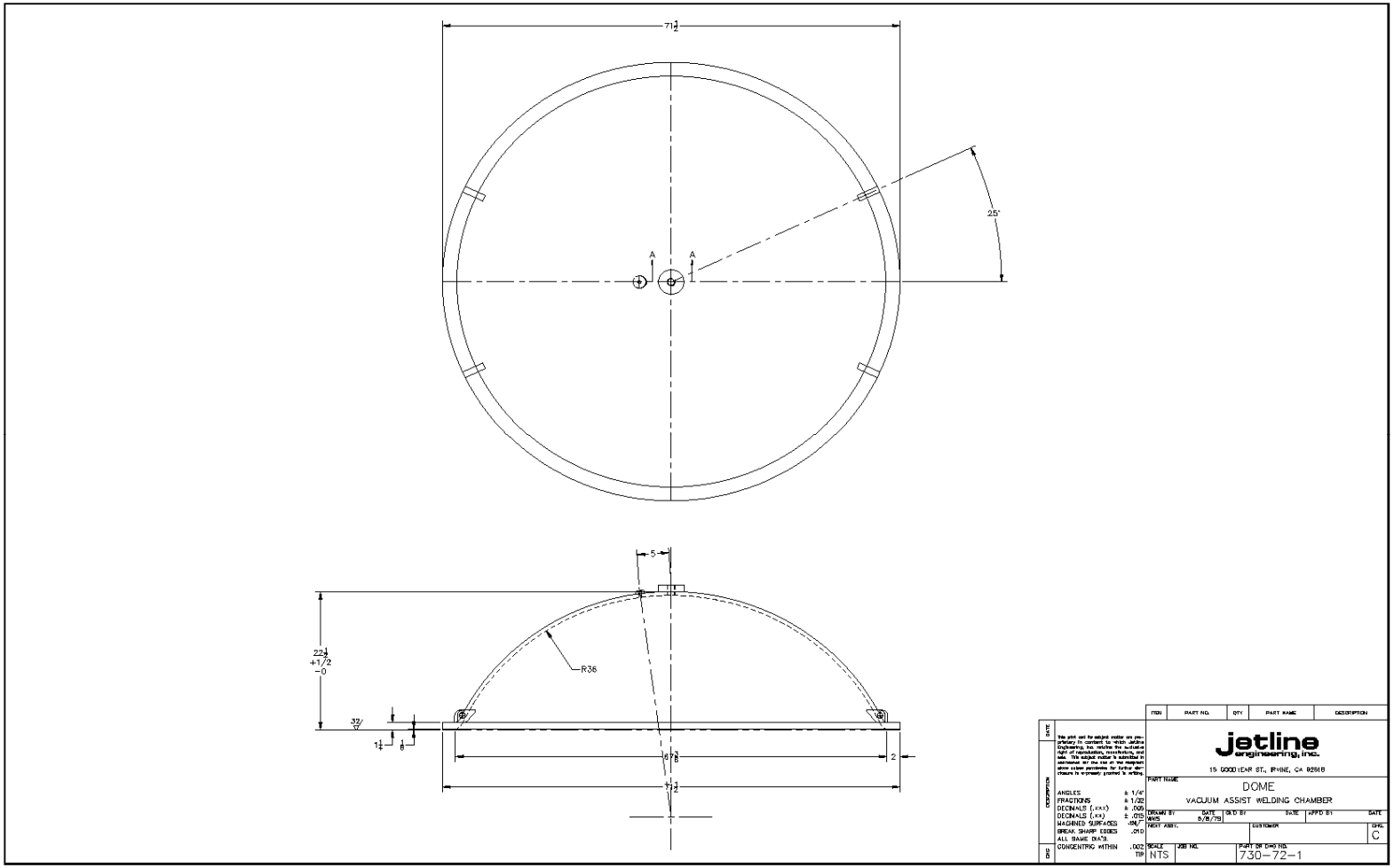

Figure A2 – Glovebox's Dome (730-72-1)

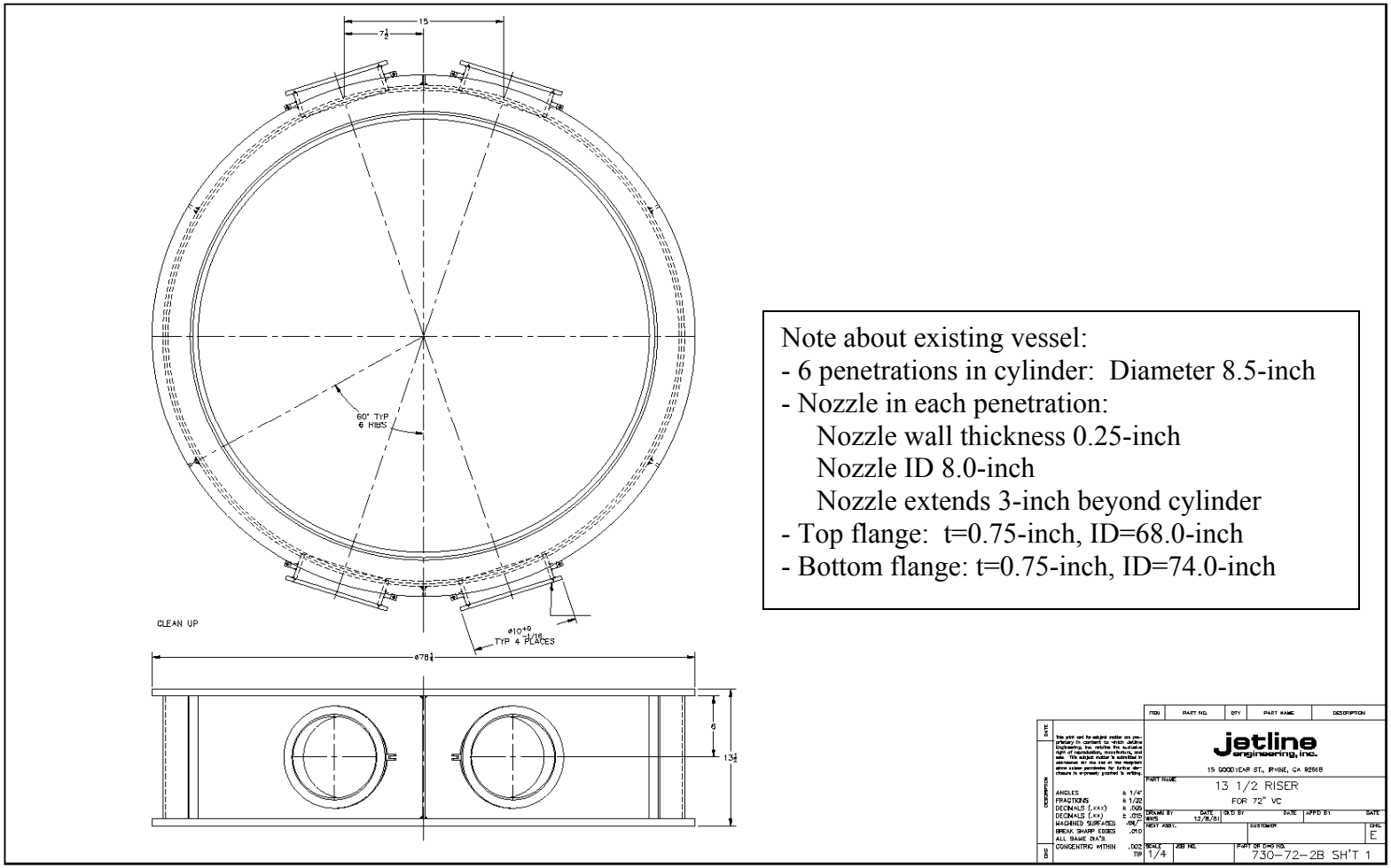

Figure A3 – Glovebox's Riser (Drawing 730-72-2B)

The dome is a spherical cap, with a radius of 36 inches, a thickness of 0.75 inches, and spanning approximately 140 degrees. It is reinforced at its base by a flange, to which it is glued. No details of the glue joint are available.

The riser assembly of the vessel consists of a cylinder with a flange on the top and a flange on the bottom. The cylinder has an inner diameter of 72.50 inches, a wall thickness of 0.25-inch, and a height of 12-inches. The cylinder has six penetrations of 8.5-inches in diameter (note that the drawing only shows four penetrations). Each penetration has a nozzle that is 0.25-inch thick and an inner diameter of 8.0-inch. Each nozzle extends roughly 3-inches beyond the outer wall of the cylinder. The top flange is 0.75-inch thick, has an inner diameter of 68.0-inches and has an outer diameter of 76.25-inches. The bottom flange is 0.75-inch thick, has an inner diameter of 71.5-inches and has an outer diameter of 76.25-inches.

The bottom plate, or the tabletop, is 2-inches in thickness and has on outer diameter of 76.25-inches. There is a single penetration of 6.375-inch in diameter, with its center lying 5.44-inches from the outer edge of the tabletop.

The dome geometry and the details of the two penetrations in the top of the dome are shown in Figure A4. The remaining vessel geometry that is used in the FEA is shown in Figure A5.

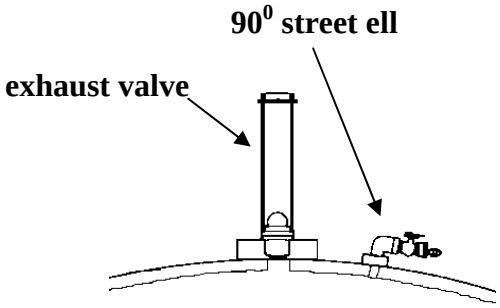

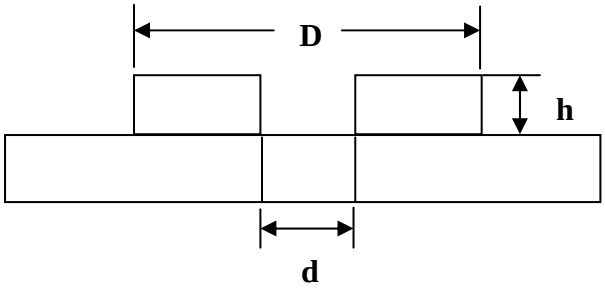

Penetration Reinforcement Details

	D	d	h
Exhaust valve	4”	1.25”	1”
90^0 street ell	1.5”	0.5”	
7/16”			

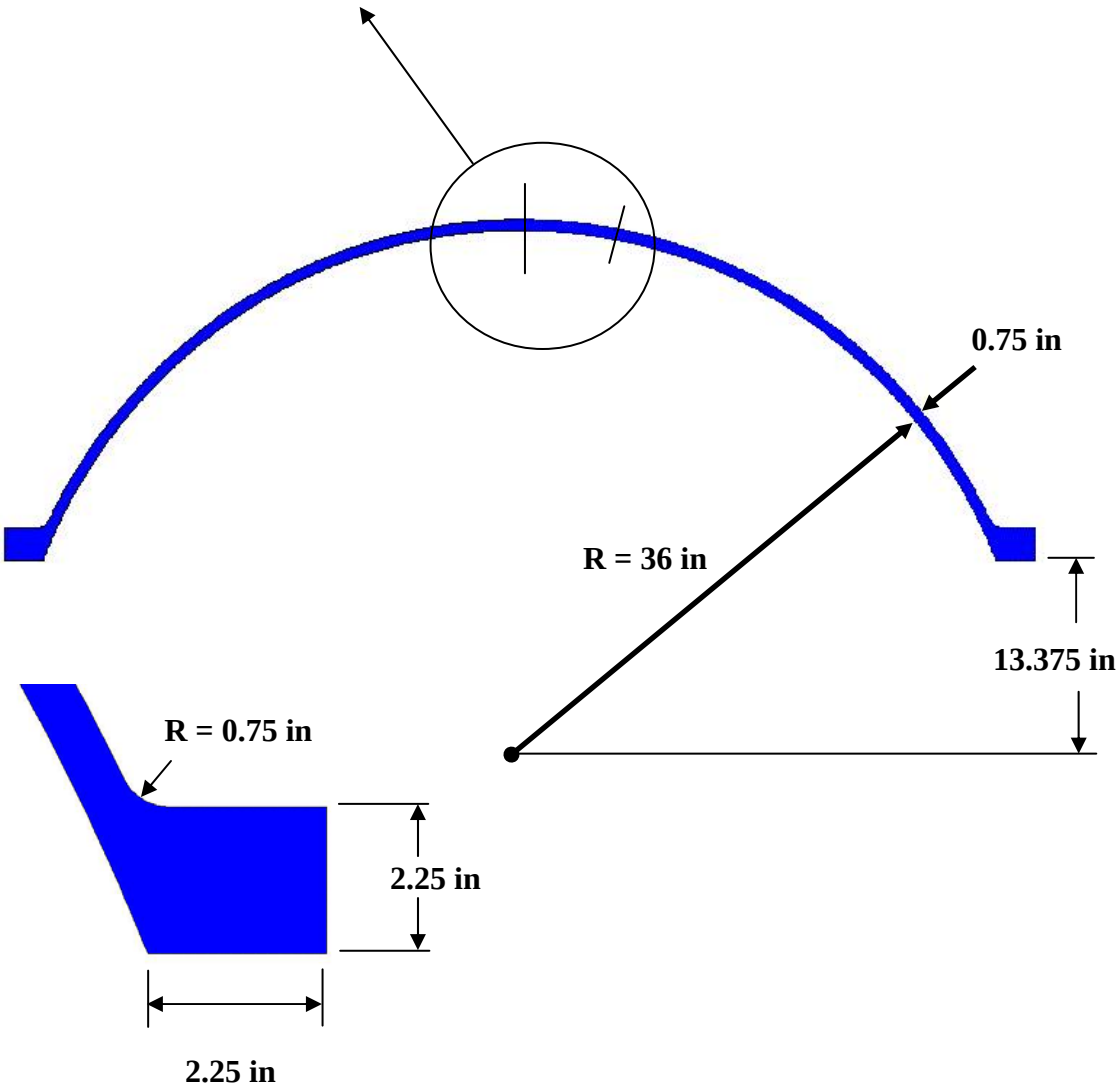

Figure A4 – Dome Geometry

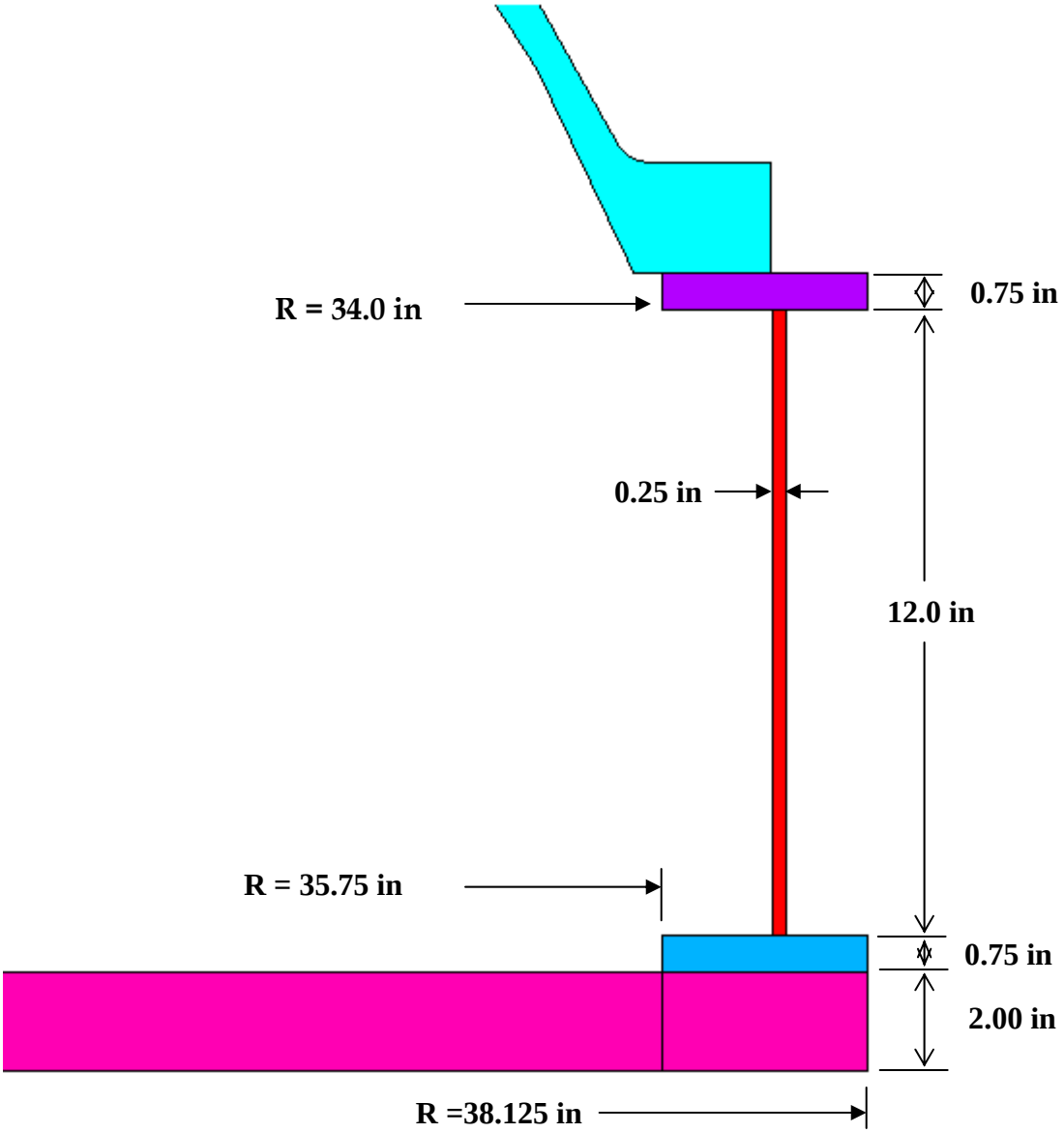

Figure A5 - 2-d section of glove box

3.0 Material Properties

The dome is made of 0.75-inch acrylic plastic (Plexiglass™). The mechanical strength of typical acrylics is several thousand psi; however, it is recommended that working stresses not exceed 1500 psi to avoid surface crazing.[2] It is also recommended that, to avoid long-term failure by creep or fatigue, elastic working strains not exceed 0.3%.[3]

Table A3 - Typical Properties of Acrylic Plastic

Property				
Young's Modulus	**Poisson's ratio**	**Specific Gravity**	**Flexural Strength**	**Compressive Strength**
470000 psi	**0.4**	**1.2**	**10000 psi**	**15000 psi**

The remainder of the vessel is made from an unspecifed hot rolled carbon steel. From ASME BPVC[4] (The Code) Section II, Part D, the minimum strength of carbon steel is SA-285 Grade A, with a maximum allowable stress of 12.9 ksi. Table A4 lists its properties.

Table A4 – Material Properties of SA-285 Carbon Steel

Young's Modulus (psi)	**Min. Tensile Strength (psi)**	**Min. Yield Strength (psi)**	**Max. Allowable Stress (S) (psi)**
29000000	**45000**	**24000**	**12900**

4.0 Design Verification

The design of the vacuum vessel follows the applicable rules of the ASME Boiler and Pressure Vessel Code (the Code) Section VIII, Divisions 1 and 2 [4] as listed in FESHM 5033 – "Vacuum Vessel Safety." The design is shown to follow the Code rules as stated in Section VIII, Div. 1, U-2. Since the vessel contains designs and materials that are not Code-approved, the design was analyzed using a combination of guidelines from Division 1 and Division 2. Table A5 summarizes the analysis by showing the design factor and the applicable Code guidelines for each component.

Table A5 – Summary of Glovebox Analysis

	Component	Code Sec VIII guidelines			Design Factor
5.0	Dome – collapse pressure	Div 2, Part 5	Calculated: 234 psi	Required: 14.7 psi	16
	Dome - internal pressure	-- [5]	Allowed: 12.9 ksi	Calculated: 0.08 ksi	161
	Cylindrical shell - wall thickness for external pressure	Div 1, UG-28	Actual: 0.25 inch	Required: 0.11 inch	2
	Cylindrical shell - wall thickness for internal pressure	Div 1, UG-27	Actual: 0.25 inch	Required: 0.012 inch	20
	Bottom plate - thickness	Div 1, UG-34	Actual: 2.0 inch	Required: 1.0 inch	2
	Top vessel flange - stresses	--	Allowed: 12.9 ksi	Calculated: 11.3 ksi	1.1
	Bottom vessel flange - stresses	--	Allowed: 12.9 ksi	Calculated: 10.1 ksi	1.3
	Top cylinder/flange junction – primary local membrane stresses	Div 2, Part 5	Allowed: 19.3 ksi	Calculated: 3 ksi	6.4
	Top cylinder/flange junction – secondary bending stresses	Div 2, Part 5	Allowed: 38.7 ksi	Calculated: 24.4 ksi	1.6
	Bottom cylinder/flange junction - primary local membrane stresses	Div 2, Part 5	Allowed: 19.3 ksi	Calculated: 13.7 ksi	1.4

	Bottom cylinder/flange junction – secondary bending stresses	Div 2, Part 5	Allowed: 38.7 ksi	Calculated: 3.5 ksi	11
	Dome flange - stresses (% strain)	-- [5]	Allowed: 1500 psi (0.3%)	Calculated: 1218 psi (0.26%)	1.2 (1.2)
	Bottom plate - bending stresses	Div 2, Part 5	Allowed: 19.3 ksi	Calculated: 5.2 ksi	3.7
	Dome's 1.25" opening - reinforcement	Div 1, UG-37	Available: 2.75 in^2	Required: 0.47 in^2	5.9
	Dome's 0.5" opening - reinforcement	Div 1, UG-37	Available: 0.44 in^2	Required: 0.187 in^2	2.4
	Cylinder opening - reinforcement	Div 1, UG-37	Available: 0.56 in^2	Required: 0.44 in^2	1.3
	Bottom plate opening - reinforcement	Div 1, UG-37	Available: 6.4 in^2	Required: 3.2 in^2	2.0

5.0 Dome Loading and Failure Modes

The dome may fail by either collapse, or by creep or fracture. Collapse is dependent on the spherical geometry and material modulus, and occurs globally, over the entire surface of the dome. Creep and fracture are local failure modes associated with the discontinuity stresses at the flange/dome junction.

This section considers only collapse, using closed-form approximations, and 3-d finite element models. Internal pressure is considered in Section 6. Local failure is addressed in Section 7, using the results of a 2-d FEA of the vessel.

5.1 Collapse – Closed Form Approximations

The collapse load was calculated by both approximate formulas, and finite element models.

Three formulae are available from Reference 5 to calculated the collapse of a spherical shell. All are found in Table 32, Case 22.

5.1.1 Ideal Collapse Pressure

The "ideal" collapse pressure (i.e., the collapse pressure of a sphere with no geometric imperfections) is found from

$$q' = 2Et^2/(12r^3(1-\upsilon^2))$$

where q' = collapse pressure - psi
E = Young's modulus = 470000 psi
t = thickness of sphere = 0.75 in
r = radius of sphere = 36.75 (outer radius)
υ = Poisson's ratio = 0.4

Substituting into the equation, the "ideal" collapse pressure is 260 psi.

5.1.2 Probable Actual Minimum Collapse Pressure

The probable minimum collapse pressure, taking into consideration geometric imperfections, is found from

$$q' = 0.365Et^2/r^2$$

Substituting gives a probable minimum collapse pressure of 75 psi.

5.1.3 Collapse Pressure of a Spherical Cap

For a spherical cap, half-central angle φ between 20 and 60^0, r/t between 400 and 2000, the collapse pressure is found from the following empirical relationship:

$$q' = (1 - 0.00875(\varphi - 20^0)(1 - 0.000175(r/t))(0.3E(t/r)^2$$

For the glove box geometry, $\varphi = 68^0$, and r/t = 48. Both of these values fall outside of the limitations of this correlation. However, the calculation is completed for information.

Substituting give a collapse pressure for the spherical cap of 35 psi.

5.2 Collapse - Finite Element Linear (Bifurcation) Buckling

Finite element models were made to simulate a full sphere, and a spherical cap. In all models, ten-node tetrahedral solid elements were used.

5.2.1 Full Sphere

A half model of a sphere of inner radius 36 inches was created and constrained at the midplane against rotations and vertical displacements. The finite element model is shown in Fig. A5. The buckled shape is shown in Fig. A6.

The calculated linear buckling pressure for this model is 240 psi. This is within 8% of the value predicted by the full sphere collapse calculation from Reference 5. It should be noted that the FE model predicts a lower buckling pressure.

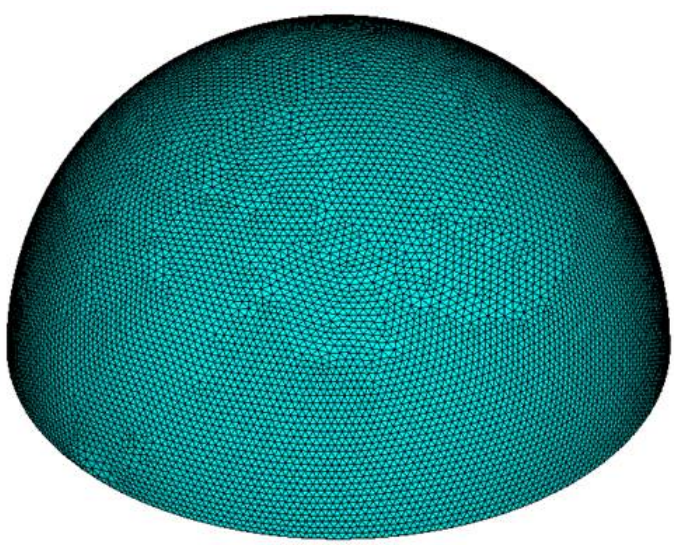

Figure A5. Half-symmetric FE model of full sphere

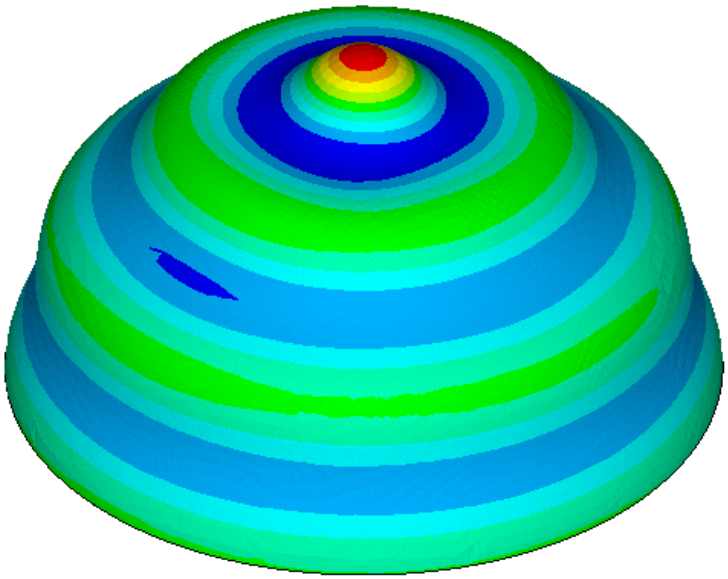

Figure A6. Lowest buckling mode shape of spherical FE model

5.2.2 Spherical Cap

The full sphere model was modified to represent a spherical cap of the dome dimensions. This model is shown in Fig. A7.

In running this model, two different boundary conditions were applied to simulate the stiffening effect of the flange:

1. The nodes at the cut were constrained against vertical displacement and rotation, but were allowed to move radially (neglects flange radial stiffening effect).
2. The nodes at the cut were constrained against vertical displacement and rotation, as well as radial displacement.

The calculated collapse pressure when radial flange displacements are allowed is 234 psi. The buckled shape for this case is shown in Fig. A8.

The calculated collapse pressure when radial flange displacements are constrained is 244 psi. The buckled shape for this case is shown in Fig. A9.

The buckled shapes are identical for both models, and both show a much different shape than that of the collapsed full sphere.

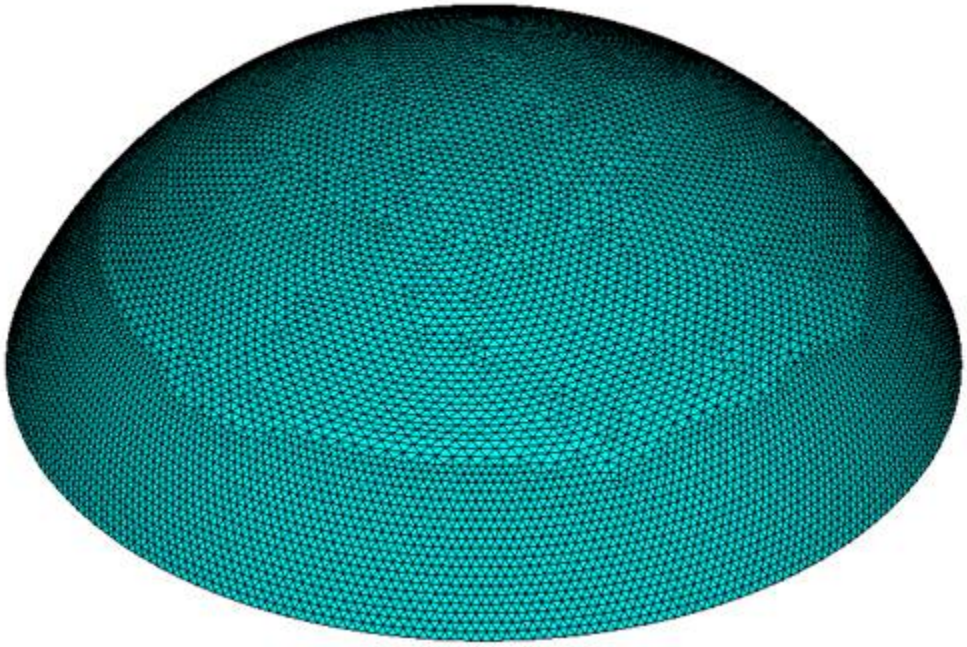

Figure A7. FE model spherical cap

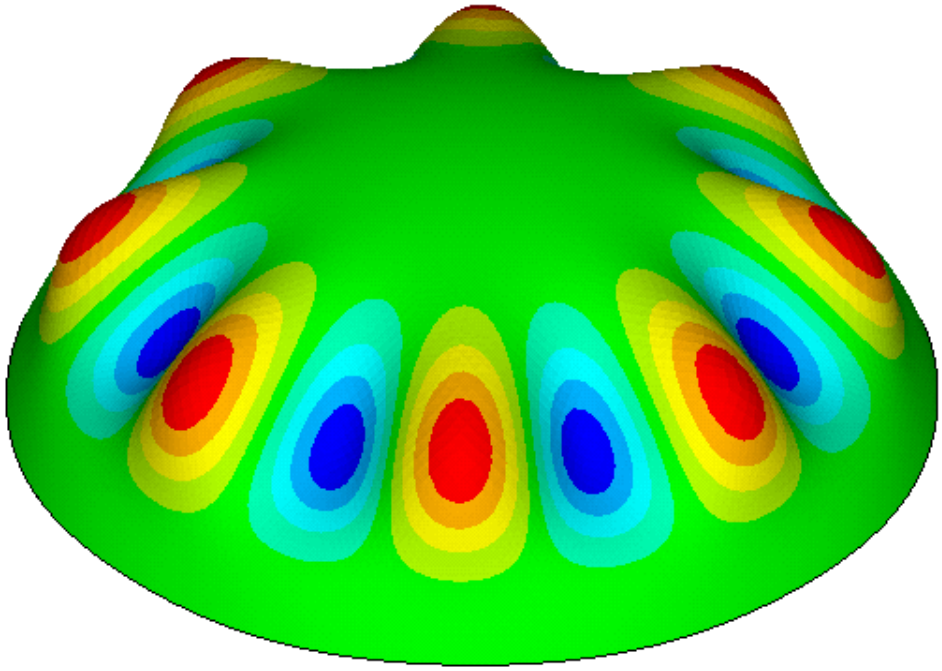

Figure A8. Buckled shape of sphere – rotations constrained but radial displacement allowed in flange region

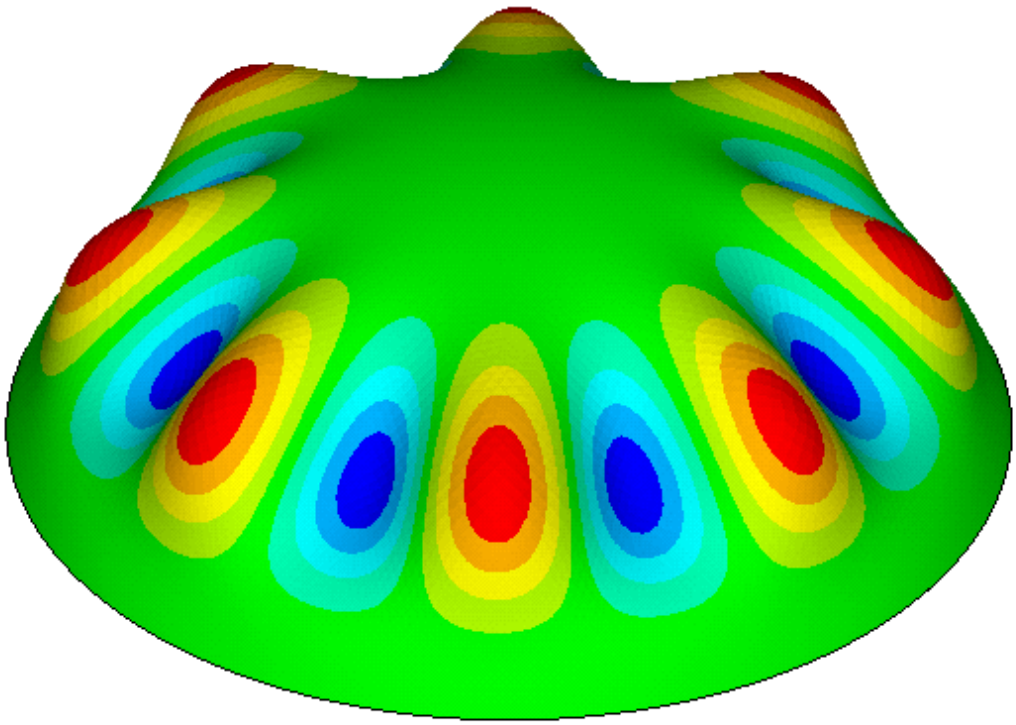

Figure A9. Buckled shape of sphere – rotation and radial displacement constrained in flange region

5.3 Assessing the Collapse Calculation Results

The designs factors calculated by each of the methods in this section are summarized in Table A6. The design factor is calculated as collapse pressure divided by 14.7 psi.

Table A6 - Summary of Collapse Calculations

Method	Calculated Buckling Pressure	Design Factor
Ref. 3 - full sphere, ideal	260	17.7
Ref. 3 - full sphere, probable	75	5.1
Ref. 3 - spherical cap	35	2.4
FEA - full sphere	240	16.3
FEA – spherical cap, radial flange motion allowed	234	15.9
FEA – spherical cap, radial flange motion constrained	244	16.6

The calculations from Reference 5 give the lowest buckling pressures, but in the worst case (collapse of a spherical cap) still suggest a design factor of greater than 2.

It is acknowledged that the spherical cap correlation was applied to a geometry that is outside of the applicable limits of the equation. But it should also be noted that the FE results do not support the notion of a large difference between the full sphere and the spherical cap collapse pressures. This may be due to the presence of the flange (simulated with constraints in the FE model), or it may be excessive conservatism in the Reference 5 spherical cap correlation itself.

The FE result for a full sphere is close (within 8%) to that predicted by the "ideal" calculation of Reference 5, and implies that the FE models work well in this regime.

The FEA results are best used with Part 5 of ASME Section VIII, Div. 2, to establish a "Code" allowable external working pressure. From 5.4.1.2,

"If a bifurcation (i.e., linear) buckling analysis is performed using an elastic stress analysis without geometric nonlinearities in the solution to determine the pre-stress in the component, a minimum design factor of $\phi_B = 2/\beta_{cr}$ shall be used."

For spherical shells, $\beta_{cr} = 0.124$, giving a design factor of 16. Applying this design factor to the lowest buckling pressure of the two spherical cap FE models gives a maximum allowable external working pressure of 234/16 = 14.6 psi. This is acceptably close to the actual operating pressure of 14.7 psi.

To summarize, all calculations suggest design factors of greater than two, and the FE model which most conservatively simulates the actual cap gives results which satisfy the Section VIII, Div. 2, Part 5 requirement for a design factor of 16.

6.0 Required Thickness of Spherical Shell due to Internal Pressure

The internal MAWP of the vessel is 1.0-psi. For the acrylic plastic dome, the meridional (σ_1) and hoop (σ_2) stresses due to internal pressure can be calculated using the same equation[5]:

$$\sigma_1 = \sigma_2 = \frac{qR_2}{2t}$$

$$\sigma_1 = \sigma_2 = 24.25 \text{ psi}$$

Where q = internal pressure = 1.0 psi
R_2 = second principal radius of curvature (inner radius plus half of the wall thickness) = 36.375 inch
t = wall thickness = 0.75 inch

The stresses in the dome due to internal pressure are far less than the maximum allowable stress of 12.9 ksi.

7.0 ASME Code Calculations

ASME Section VIII, Div. 1 calculations can be done to look at the required thickness of the cylindrical shell and the bottom plate. The shell thickness required for internal pressure is also examined.

7.1 Required Thickness of Cylindrical Shell

The required thickness of a cylindrical shell subjected to *external pressure* is determined by the procedures of the Code, Div. 1, UG-28. This method is a cut-and-try approach, where a thickness is assumed and the corresponding external allowable pressure calculated.

For our geometry: $D_o = 73$ in
$t = 0.11$ in (trial thickness)
$L = 12.75$ in (C/L to C/L of flanges)
$D_o/t = 663.6$
$L/d = 0.175$

From Fig. G in Subpart 3 of Section II, Part D, the factor A = 0.0005. From Table CS-2, B = 7300. The allowable pressure P_a is found from

$$P_a = 4B/3(D_o/t)$$

$$P_a = 14.7 \text{ psi}$$

Therefore, the required thickness of the cylindrical shell due to external pressure is 0.11 inches, which is much less than the actual thickness of 0.25 in.

The required thickness due to *internal pressure* is calculated following UG-27 for a cylindrical shell. For our geometry:

P = 1.0 psi (internal pressure)
R = 36.25 inch (inner radius of cylinder)
S = 12.9 ksi (maximum allowable stress for SA-285)
E = 0.70 (weld joint efficiency for a double butt weld)

Considering circumferential stress, the minimum required wall thickness is:

$$t_{circum} = \frac{PR}{SE - 0.6P}$$

$$t_{circum} = 0.004 \text{ inch}$$

Considering longitudinal stress, the minimum required wall thickness is:

$$t_{longit} = \frac{PR}{2SE + 0.4P}$$

$$t_{longit} = 0.002 \text{ inch}$$

The minimum required wall thickness for the cylinder is the greater of the two calculated stresses, which is 0.004-inch. This is far less than the actual wall thickness of 0.25-inch.

7.2 Required Thickness of Bottom Plate

The bottom plate is clamped to the bottom flange, and the surface between them sealed with an o-ring. This type of seal is self-energizing, and requires no preload. Therefore, the clamping process produces no edge moments. For this case, the required thickness of the head is determined by the formula of UG-34(c)(2):

$$t = d(CP/SE)^{1/2}$$

where: d = diameter of head (from Fig. UG-34)
C = factor for attachment of head to flange (from Fig. UG-34)
S = allowable stress in tension = 12.9 ksi
E = weld efficiency = 1 (no welds in head)

The geometry of the bottom plate and flange do not fit well with any of the geometries of Fig. UG-34, which makes the determination of d and C problematic.

The most obvious conservative choice for d is the outside diameter of the head, which is 78.75 inches.

Selecting an appropriate C, which is a factor that reduces head thickness to account for the assistance of edge moments at the shell, is more difficult. Deflection of the head is clearly resisted by the shell and flange, making the use of C = 1 (the maximum value) too conservative.

Values of C from Fig. UG-34 range from 0.1 for smoothly transitioning integral construction to 0.75 for designs where pipe threads are used to attach the head to shell. Many geometries have a C of 0.3 – 0.33.

Substituting d = 78.75, C = 0.5 into the equation gives t = 1.76 inches. The actual thickness is 2 inches.

The 2-d FEA of section 5.0 predicts that the required thickness of the plate is 1 in based on primary stresses at the plate center, and it is this value that is used for t in the reinforcement calculations for the bottom plate.

8.0 2-d Finite Element Model of Glove Box

A 2-d axisymmetric model was created which included the dome, vessel top flange, vessel bottom flange, and the bottom plate. Vertical support was provided at the outer circumference of the bottom plate. This is an approximation to the actual discreet support. Precise geometry was not available, and hand-measured values were used. This model is shown in Fig. A10

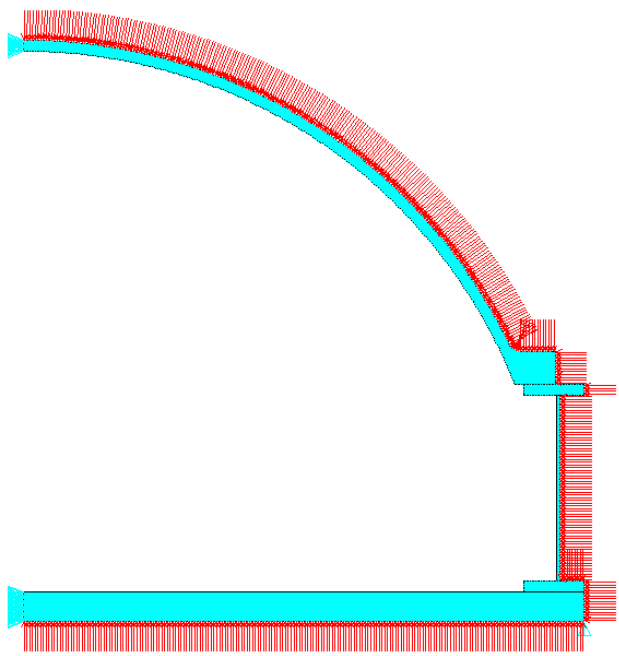

Figure A10. Axisymmetric model of glove box

8.1 Verification

The hoop stress in an externally pressurized sphere is

$$\sigma_h = Pr/2t$$

where P = external pressure = 14.7 psi
r = radius of sphere = 36.75 in
t = thickness of sphere = 0.75

The expected hoop stress, far from the flange, should then be 360 psi. Fig. A11 shows that the hoop stress through the thickness of the dome at its center, as calculated by the FE model, ranges from 368 psi to 375 psi, for an average of 371 psi. This is within 3% of the expected value.

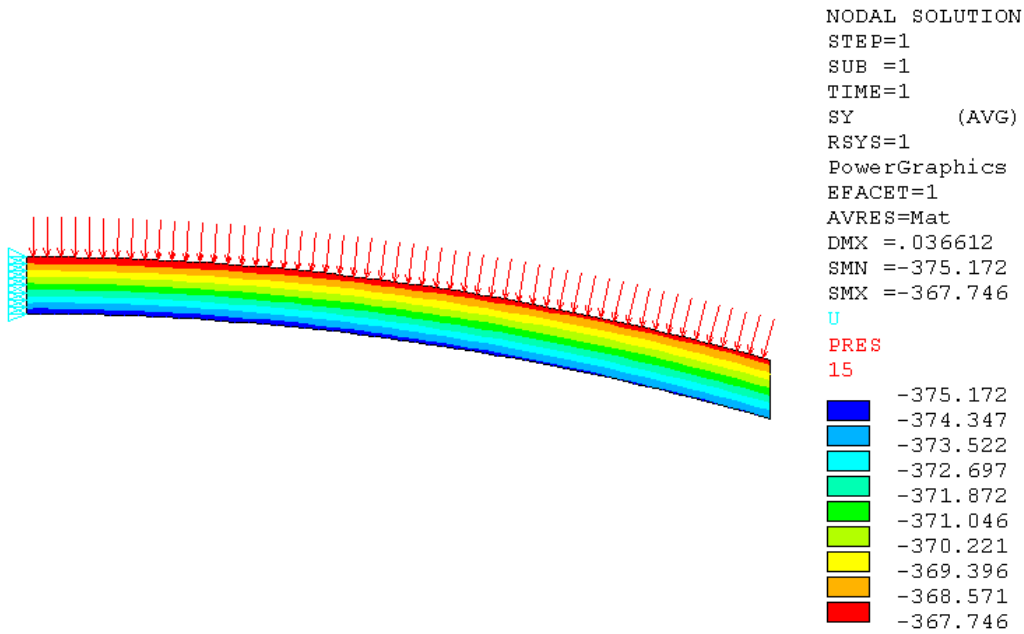

Figure A11. Hoop stress in dome at top

8.2 Displacements

The vertical displacements are shown in Fig. A12. The largest displacement is 0.07 inches, relative to the constrained outer radius of the bottom plate, and occurs at the center of the bottom 2 inch thick plate. The maximum dome deflections are 0.033 inches (again, relative to the constrained outer radius of the bottom plate.)

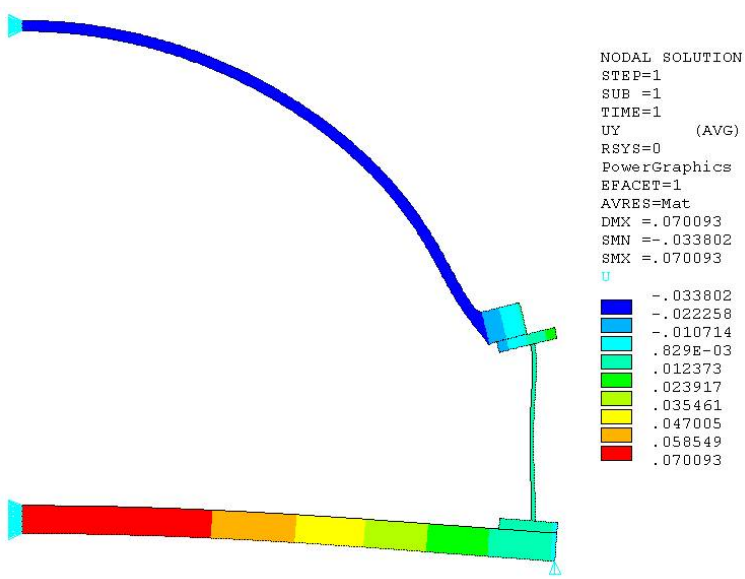

Figure A12. Vertical deflection of glove box components

8.3 Stresses in the Vessel Flanges

The flanges are rotated by the force of the dome and the bottom plate. Figs. A13 and A14 show the resulting stresses for the upper and lower flanges, respectively. The highest stress, associated with the flange/shell junction, is 11.3 ksi, which is below the maximum allowable stress of 12.9 ksi.

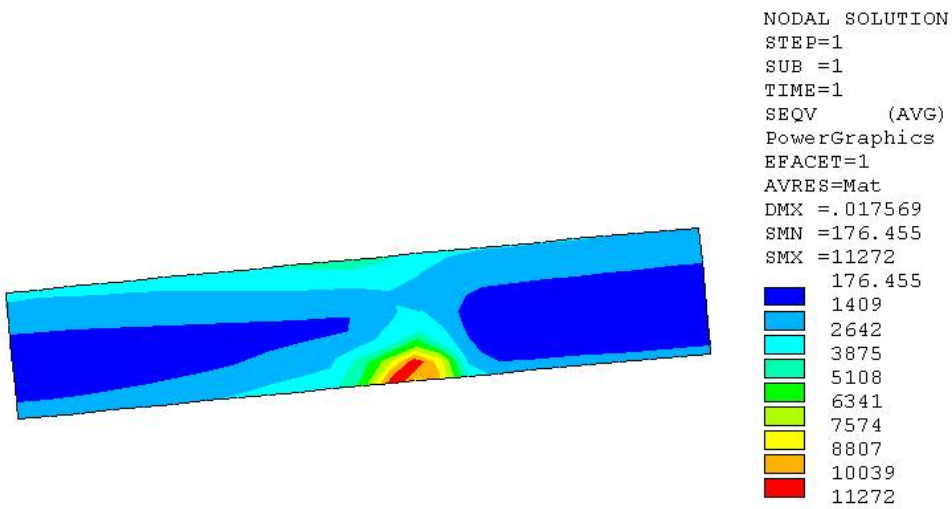

Figure A13. Stress in upper vessel flange

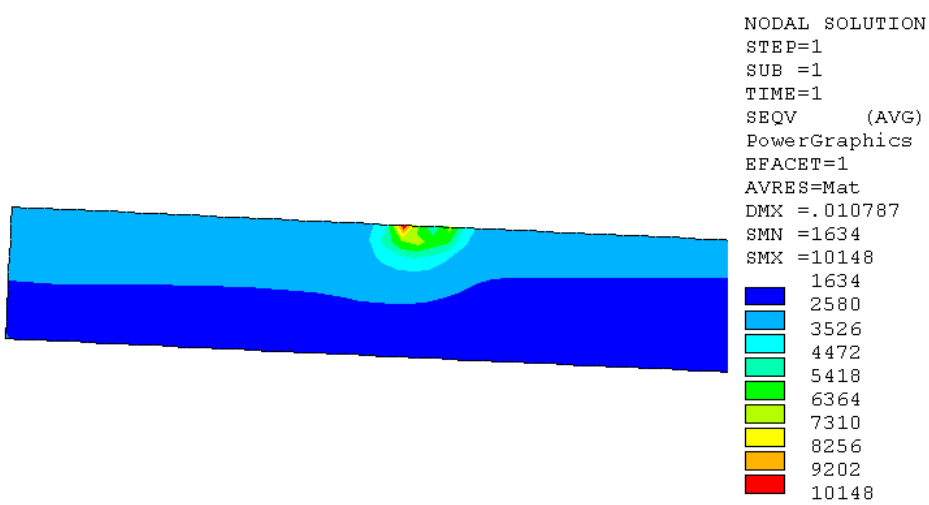

Figure A14. Stress in lower vessel flange

8.4 Stresses in the Upper Shell/Flange Junction

The highest stresses in the carbon steel components occur at the junction of the shell and the upper flange. The results from the finite element model are shown in Fig. A15.

The finite element results include peak stresses at the discontinuity. These stresses are not important in a ductile material not subjected to cyclic loading. To assess the relevant stresses in the junction (primary local membrane and secondary bending, per the ASME Code, Div. 2, Part 5), a stress classification line was established, and the stresses were linearized with an ANSYS procedure. This stress classification line, A-B, is shown in Fig. A16.

The results show that the primary local membrane stress across this section is 3 ksi; the primary local membrane and secondary bending is 24.4 ksi. The limits for these stresses are 1.5(12.9) = 19.35 ksi and 3(12.9) = 38.7 ksi, respectively. Both stresses are well below the Code limits for their stress categories.

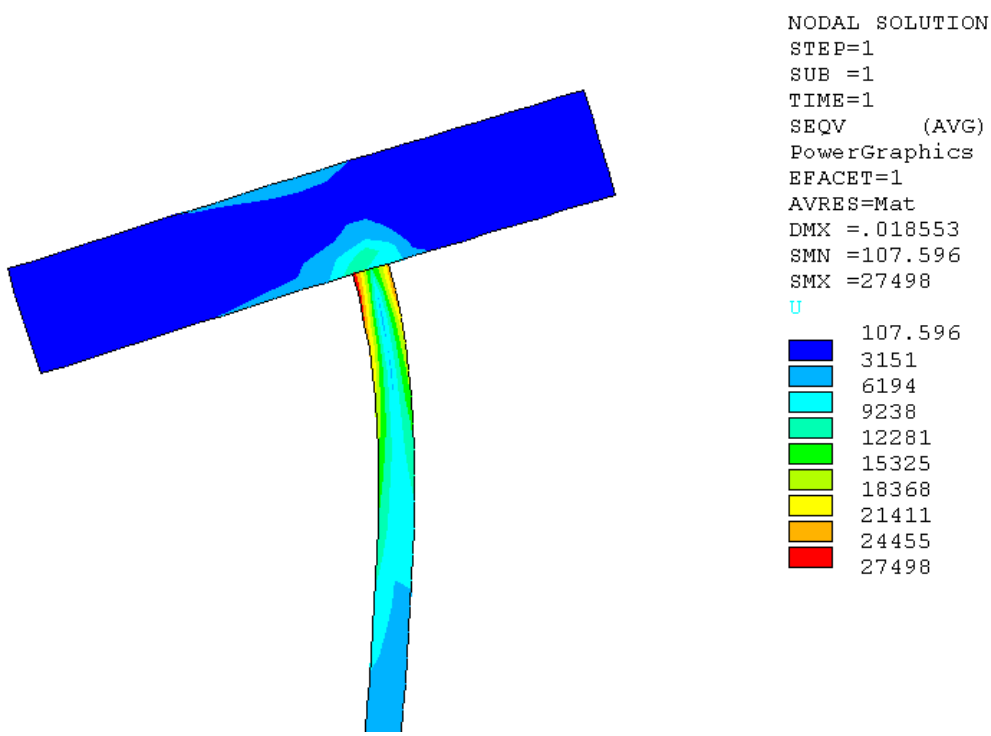

Figure A15. Stresses in upper flange/shell junction

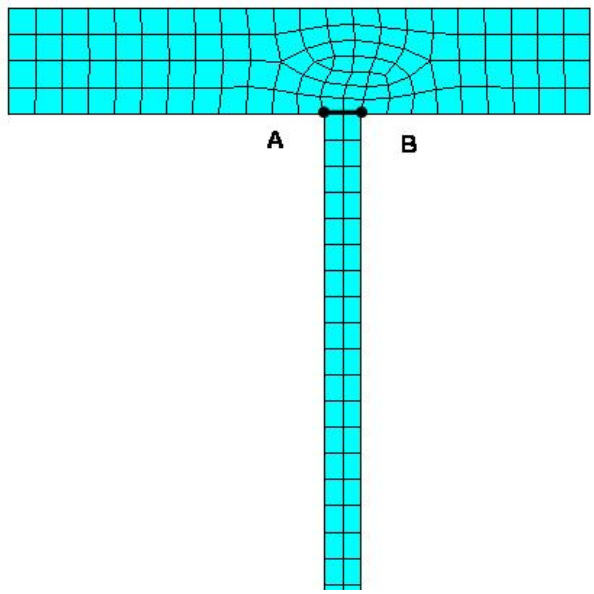

Figure A16. Stress classification line for determining primary local membrane and secondary stresses

8.5 Stresses in Lower Flange/Shell Junction

The stresses in the lower flange/plate junction from the finite element model are shown in Fig. A17. Following the same procedure as that used in the upper flange, the stresses were linearized across the stress classification line A-B of Fig. A18 into primary local membrane and secondary stresses. The linearized stresses are 13.7 ksi, and 3.5 ksi, respectively. Both stresses are well below the Code limits for their stress categories

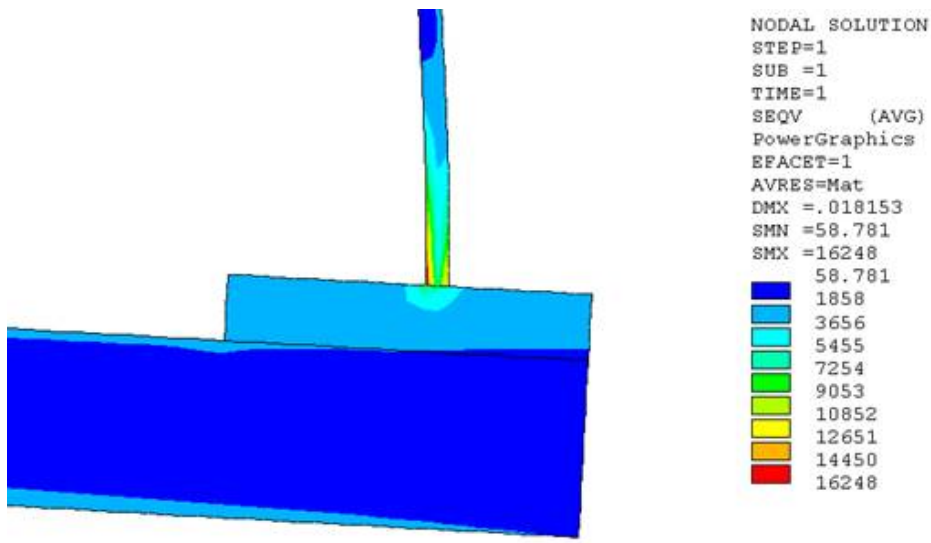

Figure A17. Stresses in Lower Flange/Shell Junction

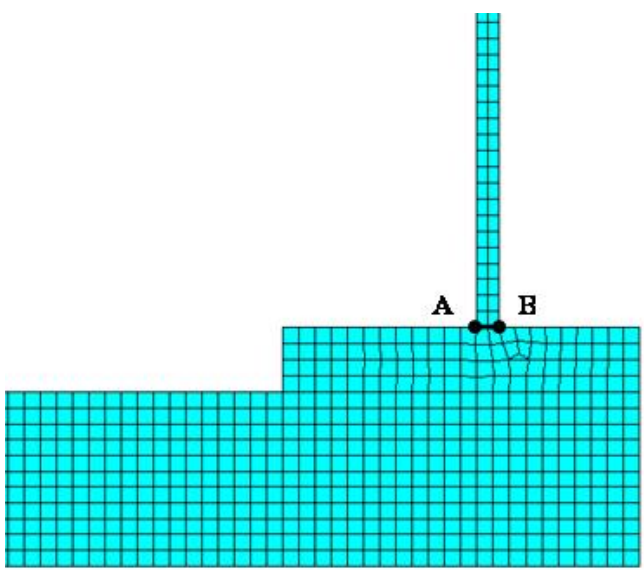

Figure A18. Stress classification line for determining primary local membrane and secondary stresses

8.6 Stresses in Dome Flange

The abrupt change in cross section between the dome and flange, and the rotation of the steel flange to which it is clamped, will produce discontinuity stresses in the dome/flange junction. These stresses are shown in Fig. A19

The maximum calculated FE stress is 1218 psi. This is below the maximum of 1500 psi recommended in Ref. 2.

The elastic strains in the dome/flange region are shown in Fig. A20. The maximum strain is 0.0026 (0.26%), which is below the 0.3% strain recommended by Ref. 3 to prevent creep and fatigue failure.

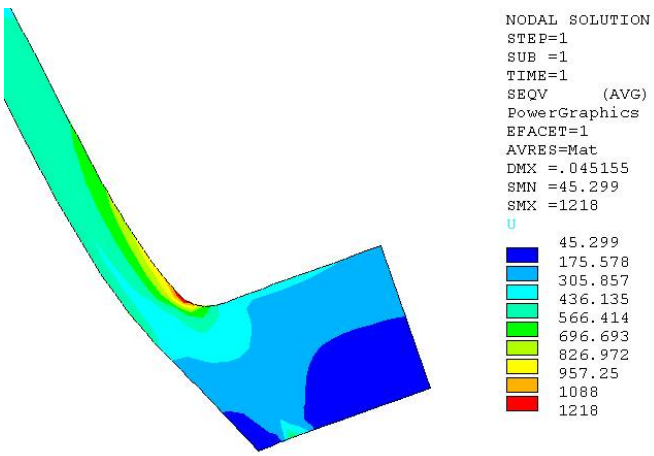

Figure A19. Stresses in dome/flange junction

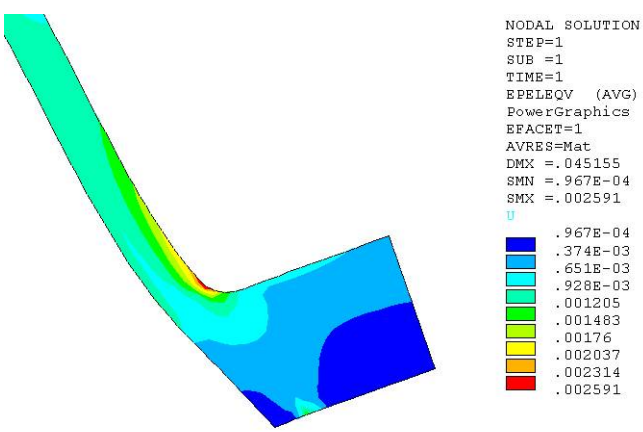

Figure A20. Elastic strains in dome/flange junction

8.7 Stresses in Bottom Plate

The Code calculation of 4.2 predicted that a thickness of 1.76 inches was adequate for the bottom plate. This is confirmed by the finite element stresses, which are shown in Fig. A21.

The bottom plate is most highly stressed at its center. This stress is pure primary bending, which has an allowable of 1.5 S = 19.3 ksi. The calculated bending stress is 5.2 ksi.

The FE results can be used to estimate the proper C for use with the UG-34 equations. Assuming that the bending stresses vary as t^2 , the value of t which gives a primary bending stress of 19.3 ksi is 1 inch. This implies that C = 0.17 for our geometry. This is within the range of C given for the various geometries of Fig. UG-34.

Therefore, the actual required thickness of the bottom plate for penetration reinforcement calculations will be taken as the FEA value of 1 inch.

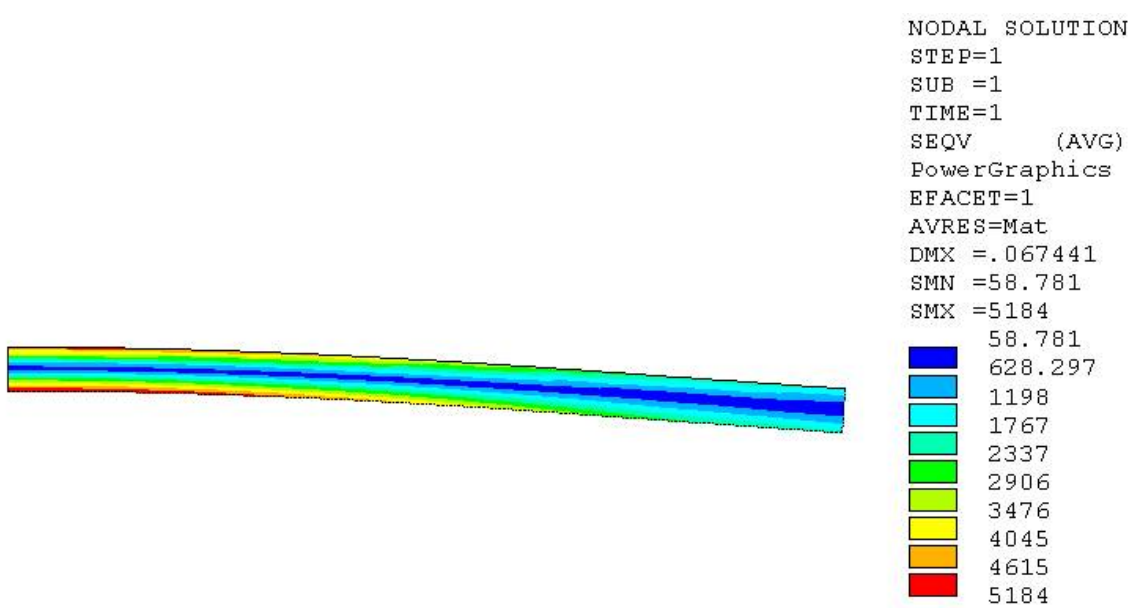

Figure A21. Stresses in bottom plate

8.8 Reinforcement of Penetrations

8.8.1 Penetrations in the Acrylic Dome

The acrylic dome has two penetrations. One is centered at the top of the dome; the other is positioned approximately 5 inches away. Acrylic reinforcement rings are glued to the openings on the outer face of the dome. (see Fig. A4)

From the Code, Div. 1, UG-37(d), the required area of reinforcement for a penetration in a shell subjected to external pressure is

$$A = 0.5(dt_rF + 2t_nt_rF(1-f_{r1}))$$

where d = diameter of opening
t_r = required thickness of shell for pressure load
t_n = nozzle wall thickness (= 0 for glove box)
F = correction factor (= 1 for external pressure)
f_{r1} = nozzle factor

Because there is no nozzle, the expression for required area of reinforcement simplifies to

$$A = 0.5dt_r$$

Referring to Fig. A4, and assuming that $t_r = 0.75$ (the full thickness of the dome), then the required areas of reinforcement for the dome penetrations are 0.47 in^2 and 0.187 in^2, for the 1.25 inch and 0.5 inch penetrations, respectively. The amount of reinforcement provided by the annular rings is found from h(D-d), and is 2.75 in^2 and 0.44 in^2 for the respective openings. For both openings, the available reinforcement exceeds the requirement.

8.8.2. Penetrations in the Cylindrical Shell

The glove box contains six 8 inch diameter penetrations through the 0.25 inch thick shell. The required reinforcement (either inherent in the shell, or provided by additional material) can be found in the procedures of UG-37.

From UG-37(d), and following the arguments of the previous section dealing with the acrylic dome penetrations, the required area of reinforcement is

$$A = 0.5dt_r$$

Using d = 8, and $t_r = 0.11$, A = 0.44 in^2.

The area available for reinforcement from the shell alone is limited to that thickness not required for pressure, and can extend no more than six inches from the hole centerline (otherwise, the flanges are infringed upon.).

The available area is 0.56 in^2, as shown in Fig. A22. This exceeds the required area of 0.44 in^2.

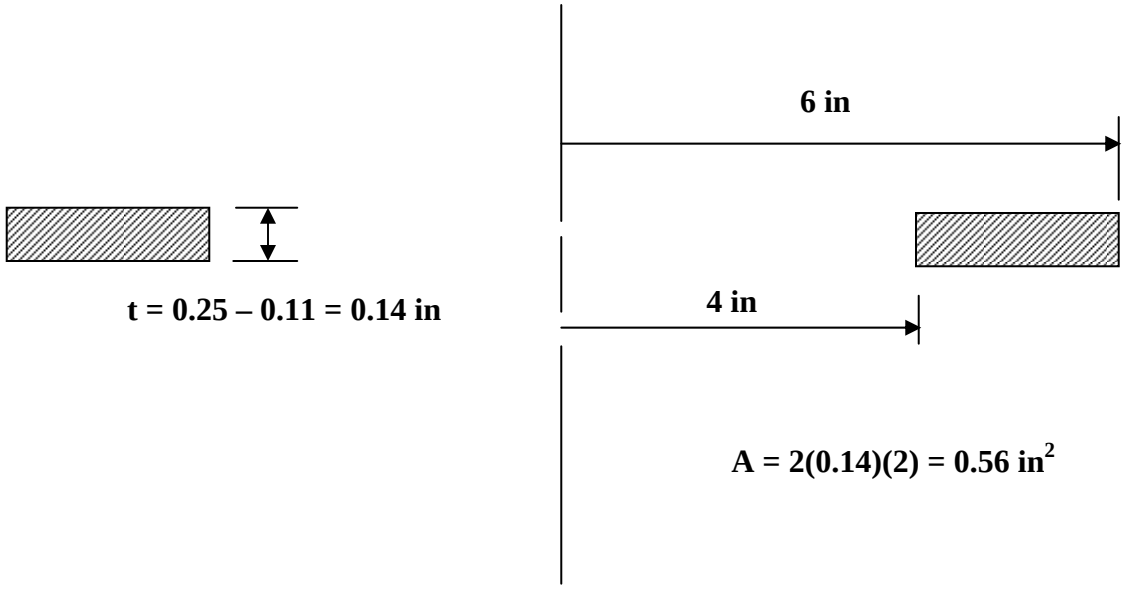

Figure A22. Reinforcement area available for 8 inch penetrations

8.7.3 Penetration in the Bottom Plate

The bottom plate contains a 6.375 inch hole. From UG-39, and recalling that the FEA-derived t of 1 inch for the bottom plate is used, the required area of reinforcement is A = 0.5(6.375)(1) = 3.2 in^2.

The area available for reinforcement is based on material in excess of the 1 inch of required thickness for pressure, and existing within a 6.375 inch radius from the hole centerline. This available area is 6.37 in^2, which exceeds the required area of 3.2 in^2.

9.0 System Relief Verification

The Jetline Welding Glovebox was manufactured with a vacuum system to evacuate the glovebox vessel and an argon supply to provide an oxygen-free environment within the vessel. Figure A23 shows a schematic of the system. The inert gas schematic was provided by the vendor, and the vessel with the vacuum system added by FNAL.

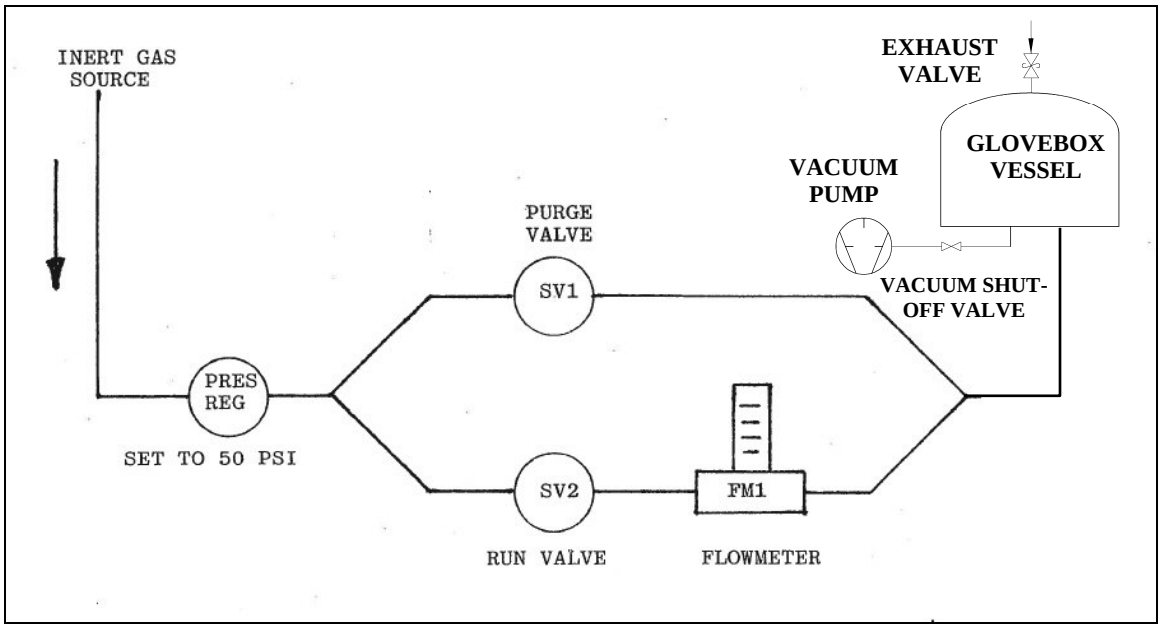

Figure A23 – Schematic of Argon and Vacuum System

The maximum setting on the pressure regulator is 400-psi. The argon supply line has an inner diameter of 0.25-inch. Information about the valves in the argon line were not provided by the vendor. The exhaust valve consists of a 1.25-inch inner diameter tube. An acrylic ball (diameter 1.0-inch) rests on an o-ring (inner diameter 0.75-inch) within the tube. When the glovebox is evacuated, the ball rests on o-ring and seals the exhaust valve. During argon flow, the ball is lifted off of the o-ring.

In order to determine if the exhaust valve is sized correctly, the venting calculations were made with the assumption that there are no restrictions in the supply line due to the valves or the flowmeter. In other words, by not taking into account the valves or the flowmeter, a flow rate of argon is calculated that is larger than the true flow rate. Even this conservative calculation will show that the exhaust valve is sized adequately.

The maximum argon flow rate from the pressure regulator through the exhaust valve on the vessel was calculated. The information and assumptions that were used to make the calculation:

- Maximum pressure at the regulator is 400-psig
- Argon supply line length is assumed to be 10-feet

- Argon supply line diameter is 0.25-inch
- Exhaust line length is 7-inch
- Exhaust line diameter is 1.25-inch
- Argon temperature is 70°F. At 400-psig, its density is 2.97-lbm/ft^3 and its absolute viscosity is 0.023-cP

From Crane[6], the pressure drop between the pressure regulator and the exit at the exhaust valve is calculated using the equation:

$$\Delta P = 3.62 \frac{K\rho q^2}{d^4}$$

Where

K = total resistant coefficient of argon system
q = argon flow rate
ρ = 2.97-lbm/ft^3 (argon density at 70°F, 400-psig)
d = 0.25-inch (argon line diameter)

The total resistant coefficient K is calculated by including the resistant coefficients of all components:

$$K = K_{supply} + K_{vexit} + K_{ventrance} + K_{exhaust} + K_{exit}$$

Where

K_{supply} = due to the supply line of 0.25-inch diameter
K_{vexit} = due to argon exiting the supply line into the glovebox vessel
$K_{ventrance}$ = due to argon entering the exhaust line from the glovebox vessel
$K_{exhaust}$ = due to the exhaust line of 1.25-inch diameter
K_{exit} = due to argon exiting the exhaust line into atmosphere

The three resistance coeffiencients involving the exhaust line ($K_{ventrance} + K_{exhaust} + K_{exit}$) were multiplied by β^4 so that the total resistance coefficient K is in terms of the 0.25-inch supply line:

$$\beta = \frac{d_1}{d_2}$$

$$\beta = 0.2$$

Where d_1 = 0.25-inch
d_2 = 1.25-inch

An iterative process took place to determine the pressure drop. The final calculations yielded the following results:

Table A7 – Pressure Drop Calculations in Argon System

q	Flow rate	330	CFH
		0.092	ft^3/sec
Supply line			
Re_{supply}	Reynolds number	1074796	
f_{supply}		0.034	
K_{supply}		16.32	
Exhaust line			
$Re_{exhaust}$	Reynolds number	214959	
$f_{exhaust}$		0.023	
$K_{exhaust}$		2.06E-04	
Vessel			
K_{vexit}		1	
$K_{ventrance}$		1.60E-03	
K_{exit}		1.60E-03	
K	Total resistance coefficient	17.32	
P	Pressure drop	400.65	psi

So, when the argon pressure regulator is set at its maximum pressure of 400-psig, the flow rate is no more than 330-CFH. The pressure drop from the pressure regulator to the point where the argon enters the glovebox vessel (exit of the 0.25-inch supply line) is calculated in a similar manner:

Table A8 – Pressure Drop in Argon Supply up to the Glovebox

q	Flow rate	330	CFH
		0.092	ft^3/sec
Supply line			
Re_{supply}	Reynolds number	1074796	
f_{supply}		0.034	
K_{supply}		16.32	
Vessel			
K_{vexit}		1	
K	Total resistance coefficient	17.32	
P	Pressure drop	400.57	psi

When the argon pressure regulator is set at 400-psig, the internal pressure within the glovebox is less than 0.1-psi. So the length and the diameter of the argon supply line results in almost the entire restriction of the argon flow, resulting in a negligible internal

pressure in the glovebox. The opened exhaust valve is adequately sized to accommodate the argon flow.

9.1 Set Pressure of the Exhaust Valve

The set pressure of the exhaust valve is the pressure when the ball is lifted to allow argon flow. The pressure is the force needed to lift the ball divided by the area on the ball on which the force acts. The force is the weight of the acrylic, 1.0-inch ball, which is 0.023-lbm. The surface area of the ball is defined by the o-ring inner diameter of 0.75-inch. This results in a surface area of 0.785-in^2. The set pressure is thus 0.029-psi.

10.0 Operating Procedures

For safe operation of the Jetline Welding Glovebox, operating procedures are not required. However, they are included in Appendix B of this note. The full document, titled "Operation Manual for Vacuum Assist Welding Chamber" is online in the ILC Document Management System:

http://ilc-dms.fnal.gov/Workgroups/CryomoduleDocumentation/mp9-glove-box/

11.0 Welding Information

Figure A24 shows a typical note that specifies the welding for the carbon steel riser assembly.

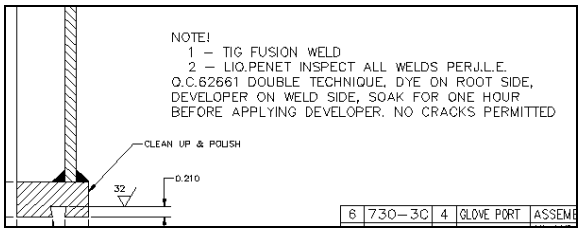

Figure A24 – Typical Weld Spec for the Riser (Chamber) Assembly

Appendix B – Operating Procedure

From the document that was provided by Jetline, titled "Operation Manual for Vacuum Assist Welding Chamber"

Section V

Operation

A. Chamber Preparation

1. Prepare the chamber for welding
   a) Remove the plexiglass dome by use of the finger lifting lugs and clean all the metal surfaces, tools, etc. with an acetone solvent. Use a lint free cloth. The acetone helps absorb and evaporate moisture as well as remove grease or other foreign residues.
   b) Clean the plexiglass dome with a soft cloth using Mequiars mirror glaze MGH-10 polish.
   c) Place the work in the chamber and put the dome on to the riser flange. Do not forget torch accessories, filler wire, sharpened tungsten electrodes, pliers and cutters.
2. Secure all clamps on the following areas:
   a) Lower riser flange to the table
   b) Upper riser flange to the dome
   c) Glove port covers
3. Secure manual valves.
   a) Open the glove port ball valves (see chamber drawing, item 7).
   b) Connect the inert gas regulator to a cylinder of argon. This regulator must be set to 50 PSI (3.5 kg per sq cm). Connect the argon hose from the regulator to the flowmeter. If your source of argon is a bulk argon system piped throughout the plant, connect the argon hose to the piping system, providing the pressure in the pipe line does not exceed 50 PSI (3.5 kg per sq cm).
   c) Open the inert gas regulator from the source.
   d) Close the inert gas purging ball valve (see chamber drawing, item 10).
   e) The system is now prepared for initial purging.
4. Initial purging consists of evacuating the chamber to a low vacuum, followed by a back-filling with inert gas.

B. Operation Procedure

1. Open the vacuum shut-off ball valve (see chamber drawing, item 11).
2. Turn on the motor starter switch; vacuum will commence at this time.
3. When the gage reads 27-28" HG, shut off the ball valve (see chamber drawing, item 11); turn off the motor starter switch (see chamber drawing, item 15).
4. Turn on the inert gas high flow needle valve (see chamber drawing, item 16). This valve is to remain in this position until the exhaust valve ball rises (see chamber drawing, item 2).
5. Close the inert gas high flow needle valve 3 to 5 minutes after the exhaust valve ball rises.
6. Set the flowmeter at 20 CFH.
7. Begin the procedure for testing gas quality with the J2B gas purity analyzer (optional equipment).

8. If the results are negative (40 PPM or worse) recycle the vacuum system or purge longer.

C. Welding

Following evacuation, back-filling and gas analysis, the chamber is ready for welding.

1. Close the glove port ball valve (see chamber drawing, item 7).
2. Set the gas flow to 30 CFH argon.
3. Remove the port covers.
4. Insert hands into gloves and proceed with welding.

Appendix C – Vacuum Test Procedure

Test Date: 3/24/2009

Procedure: Perform the following steps, referring to the Jetline Document titled "Operation Manual for Vacuum Assist Welding Chamber," Section V:

A. Chamber Preparation
- ☑ Step 2 – Secure all clamps
- ☑ Step 3 – Secure all manual valves

B. Operation Procedure
- ☐ Step 1
- ☐ Step 2
- ☐ Step 3
- ☐ Record the vacuum pressure: 28"
- ☐ Keep the chamber evacuated for 5 minutes → visual check
- ☐ Record the vacuum pressure: 27"
- ☐ Step 4
- ☐ Turn off the argon supply after the exhaust valve ball rises.

Comments: _____

Test Engineer: Tug Arkan / Mayling Wong

Safety Witness: ~~Rich Ruthe~~ Bridget Scerini

References

1. ES&H Manual Chapter 5033, Fermilab.
2. "Design Considerations for Plexiglas acrylic sheet", Ridout Plastics Company, Inc. http://www.ridoutplastics.com/design.html
3. O'Connor, Chris, "Materials Selection in Plastic Design," Smithers-Rapra Technology. www.rapra.net/download-files/coc-article.doc
4. ASME Boiler & Pressure Vessel Code 2007.
5. Roark, R. J., and Young, W. C., Formulas for Stress and Strain, 5th Edition, McGraw-Hill Book Company, 1975
6. Crane, Flow of Fluids, Technical Paper No. 410, 1988.

Amendment 1 – Vacuum Vessel Engineering Note for the MP9 Glove Box
Bob Wands
7 December 2009

Introduction and Summary

For the MP9 Welding Glove Box, an additional riser will be used between the existing shell on which the acrylic dome is clamped and the base plate. A stress analysis will show that the shell is adequately sized for vacuum loading.

Geometry and Material Properties

The riser geometry is shown in Fig. 1. The riser is made from an unspecified hot rolled carbon steel. As was assumed in the original engineering note, from the ASME Code Section II, Part D, the minimum strength material in this category is SA-285 Grade A, with a maximum allowable stress of 12.9 ksi.

For the calculation of collapse pressure, Fig. CS-2 of Section II, Part D, Subpart 3 for carbon steels will be used.

Stress Analysis

Two calculations are performed. One determines the maximum external pressure which the cylindrical shell can sustain while maintaining a circumferential (hoop) stress below the allowable stress of 12.9 ksi; the other determines the maximum external pressure which the shell can sustain when elastic instability (buckling) is considered.

For the calculations, the following dimensions are used:

R = inside radius of shell = 35.75 in
L = length of shell (depth of riser), centerline-to-centerline of flanges = 9.375 in
t = thickness of shell = 0.25 in

For circumferential membrane stress under vacuum (15 psid), from UG-27(c)(1)

$$P = SEt/(R+0.6t)$$

where P = maximum allowable pressure
S = allowable stress = 20 ksi
E = joint efficiency = 1 (external pressure)

Therefore, based on allowable stress, the maximum allowable pressure P = 89.8 psi.

For the maximum allowable external pressure when elastic instability is considered, the procedures of Section VIII, Div. 1, UG-28 are applied.

For cylindrical shells, the maximum allowable external pressure is

$$P_a = 4B/3(D_o/t)$$

where B = factor based on A, both of which are determined from Section II, Part D, Subpart 3 charts.

For these calculations:

D = 2R = 71.5 in
L/D = 0.131
D/t = 286 in

To determine A, enter Fig. G of Subpart 3 at L/D = 0.131, and D/t = 286. From the figure, A = 0.0025. Entering Fig. CS-2 at A = 0.0025 gives B (from the 300 F curve) of 15000.

Substituting, $P_a = 4(15000)/3(286) = 70$ psi. Because 70 < 89.8, the maximum allowable external pressure of the riser is 70 psi. This pressure is a factor of 4. 67 times the actual maximum pressure of 15 psi.

Flanges

The flanges on the riser are essentially identical to those of the existing cylindrical shell of the box. The previous FEA on the existing shell will stand as variation of these details.

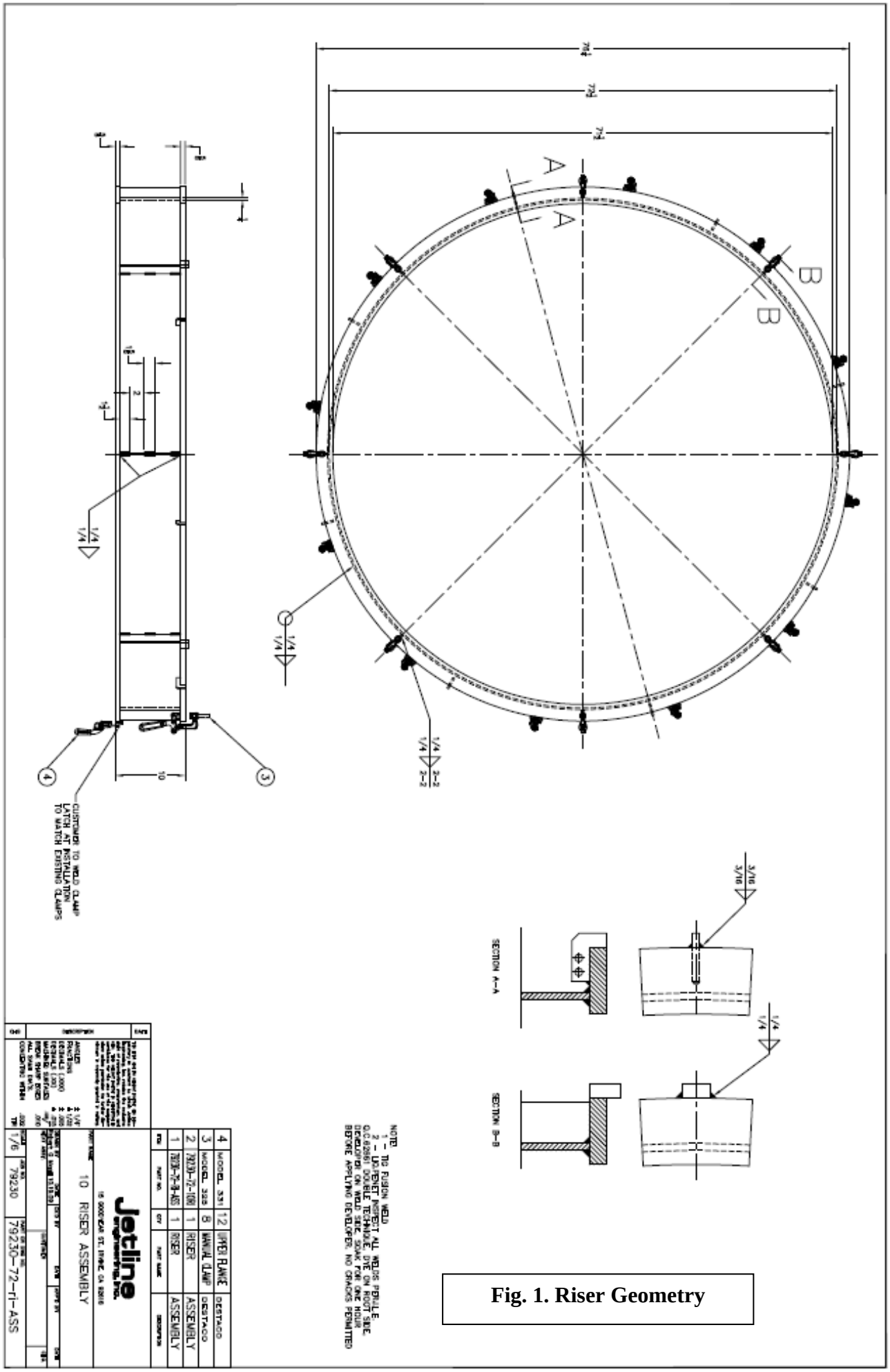

Fig. 1. Riser Geometry