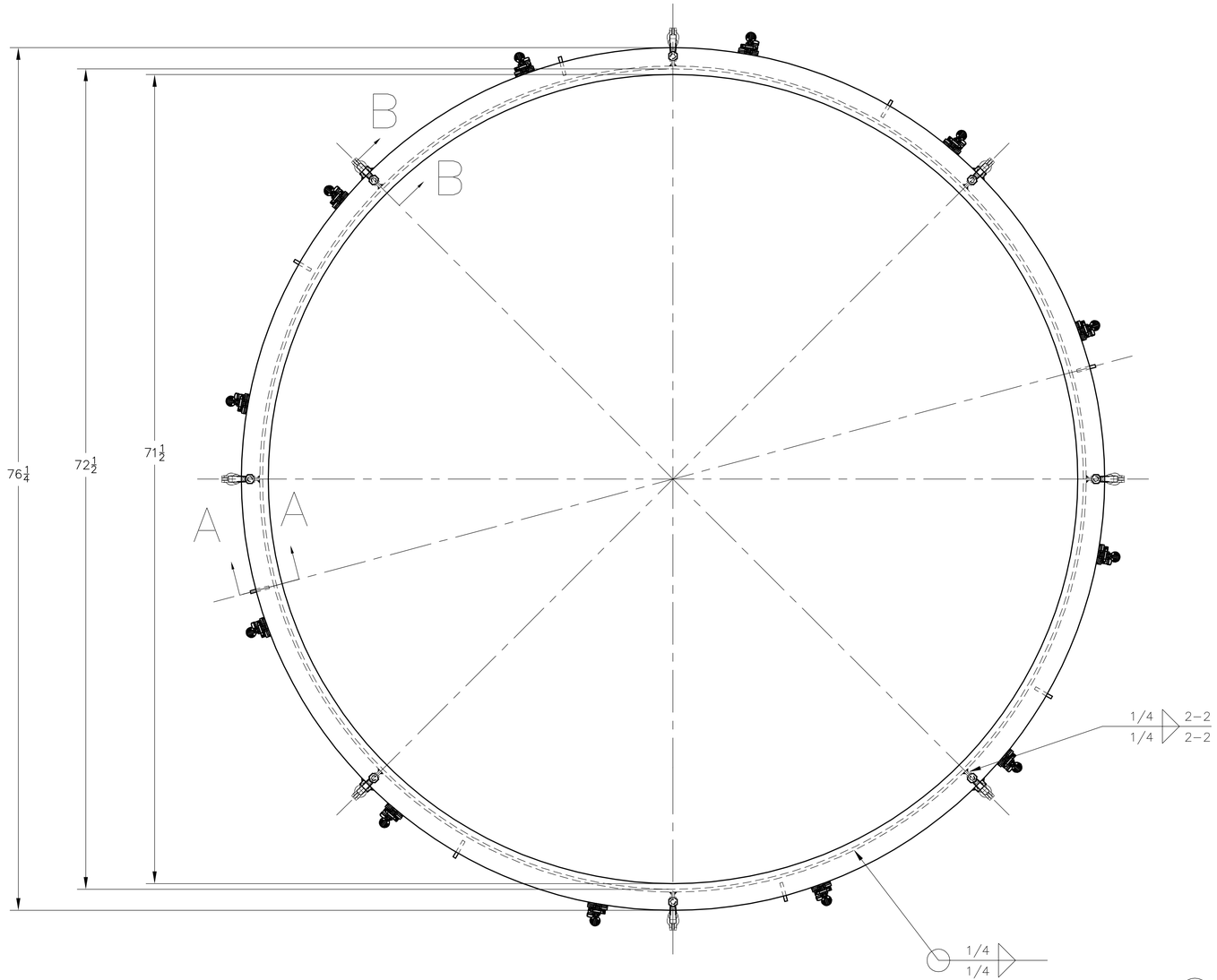

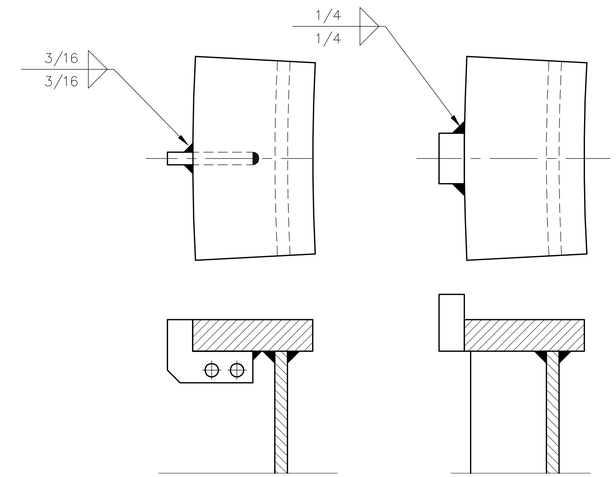

SECTION A–A

SECTION B–B

NOTE!
1 – TIG FUSION WELD
2 – LIQ.PENET INSPECT ALL WELDS PERJ.L.E. Q.C.62661 DOUBLE TECHNIQUE, DYE ON ROOT SIDE, DEVELOPER ON WELD SIDE, SOAK FOR ONE HOUR BEFORE APPLYING DEVELOPER. NO CRACKS PERMITTED

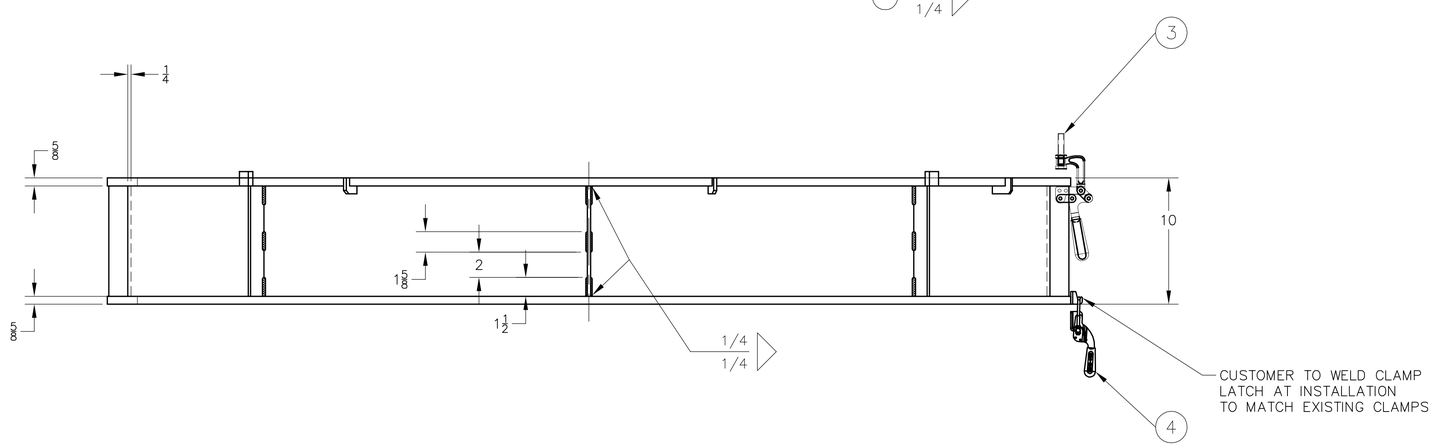

ITEM	PART NO.	QTY	PART NAME	DESCRIPTION
4	MODEL 331	12	UPPER FLANGE	DESTACO
3	MODEL 325	8	MANUAL CLAMP	DESTACO
2	79230-72-10RI	1	RISER	ASSEMBLY
1	79230-72-RI-ASS	1	RISER	ASSEMBLY

This print and its subject matter are proprietery in content to which Jetline Engineering, Inc. retains the exclusive right of reproduction, manufacture, and sale. This subject matter is submitted in confidence for the use of the recipient alone unless permission for further disclosure is expressly granted in writing.

DATE

DESCRIPTION

CHG

ANGLES	± 1/4°
FRACTIONS	± 1/32
DECIMALS (.XXX)	± .005
DECIMALS (.XX)	± .015
MACHINED SURFACES	125√
BREAK SHARP EDGES	.010
ALL SAME DIA'S. CONCENTRIC WITHIN	.002 TIR

jetline engineering, inc.
15 GOODYEAR ST., IRVINE, CA 92618

PART NAME: 10 RISER ASSEMBLY

DRAWN BY	DATE	CK'D BY	DATE	APP'D BY	DATE
Robert G Magill	10.19.09				

NEXT ASSY.	CUSTOMER	CHG.

SCALE	JOB NO.	PART OR DWG NO.
1/6	79230	79230-72-ri-ASS