| REVISION HISTORY | | | | | |
|---|---|---|---|---|---|
| CAD MAINTAINED. CHANGES SHALL BE INCORPORATED BY THE DESIGN ACTIVITY. | | | | | |
| ZONE | REV | DESCRIPTION | DATE | CHECKED | APPROVED |
| | A | INITIAL RELEASE | | | |

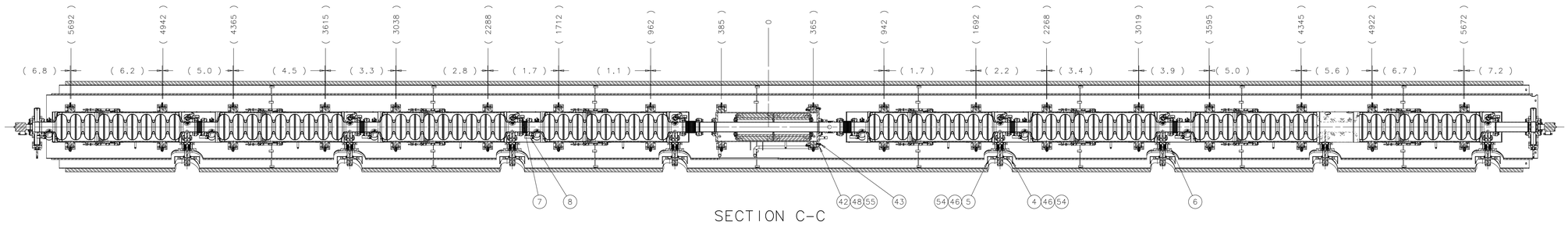


SECTION C-C

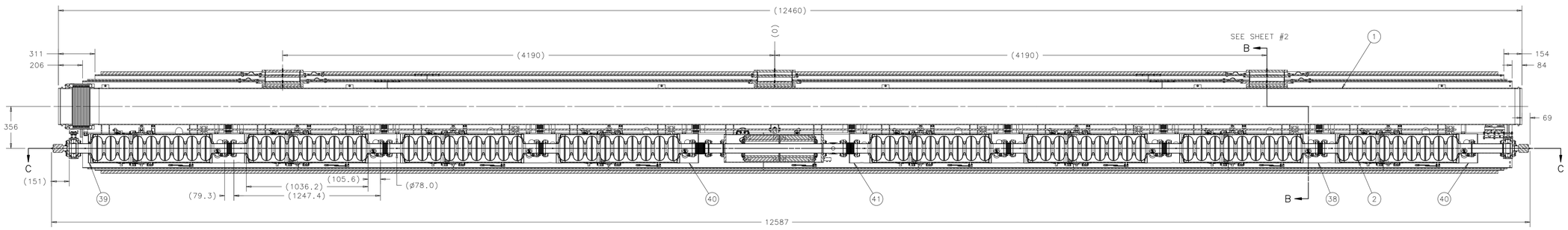


SECTION A-A

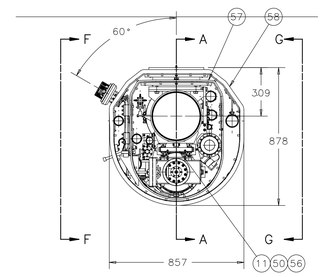


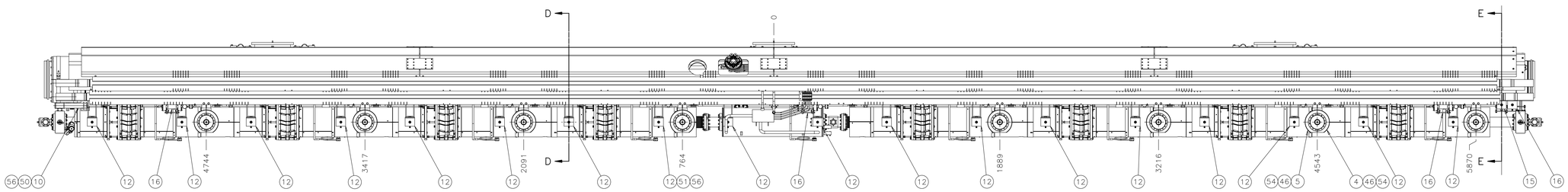


SECTION F-F
(4K & 80K INSULATIONS AND
4K & 80K LOWER SHIELDING
ARE NOT SHOWN)

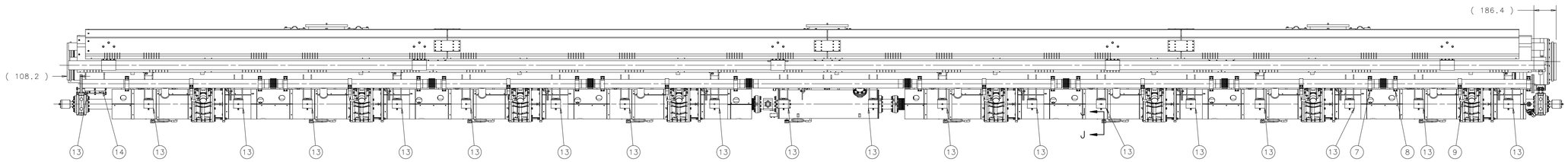


SECTION G-G
(4K & 80K INSULATIONS AND
4K & 80K LOWER SHIELDING
ARE NOT SHOWN)

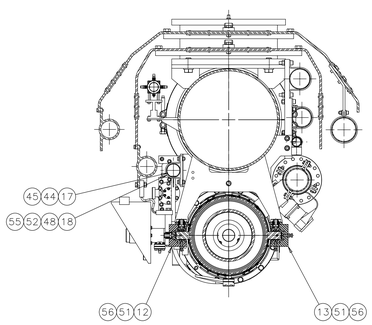


SECTION D-D
SCALE 0.150

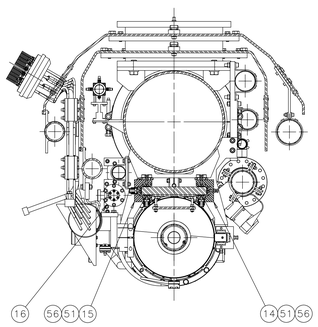


SECTION E-E
SCALE 0.150

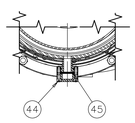


SECTION J-J
SCALE 0.25

| ITEM | P.I.N. | DESCRIPTION | QTY |
|---|---|---|---|
| 58 | COM'L | INSULATION 80K THERMAL SHIELD | 1 |
| 57 | COM'L | INSULATION 4K TERMAL SHIELD | 1 |
| 56 | COM'L | WASHER M8, 316SS | 258 |
| 55 | COM'L | WASHER M6, 316SS | 44 |
| 54 | COM'L | WASHER M4, 316SS | 48 |
| 53 | COM'L | HEX NUT M8-1.25, 316SS | 32 |
| 52 | COM'L | HEX NUT M6-1.0, 316SS | 18 |
| 51 | COM'L | SHCS M8-1.25 X20, 316SS | 160 |
| 50 | COM'L | HHCS M8-1.25 X20, 316SS | 4 |
| 49 | COM'L | HHCS M8-1.25 X30, SILICONE BRONZE | 64 |
| 48 | COM'L | HHCS M6-1.0 X20, 316SS | 26 |
| 47 | COM'L | HHCS M6-1.0 X16, 316SS | 100 |
| 46 | COM'L | HHCS M4-0.7X8, 316SS | 48 |
| 45 | COM'L | GASKET COPPER, 1.33" CF MDC PART # 191000 | 9 |
| 44 | COM'L | SOCKET HEAD SCREW/PLATE NUT MDC PART # 190094 | 54/27 |
| 43 | | BOLT HEX HEAD SPEC M8 | 4 |
| 42 | | PLATE LOCK | 4 |
| 41 | 902135 | SHIED CAVITY-MAGNET-2 ASSY | 1 |
| 40 | 902125 | SHIED CAVITY-MAGNET-1 ASSY | 2 |
| 39 | 898215 | SHIED CAVITY-VAT ASSY | 1 |
| 38 | 904655 | INTERCONNECT MAG SHIED ASSY | 6 |
| 37 | 881865 | BRAID 80K ASSEMBLY | 16 |
| 36 | 905005 | HEAT SHIELD 80K LOWER-9 | 1 |
| 35 | 904995 | HEAT SHIELD 80K LOWER-8 WLDMT | 1 |
| 34 | 904695 | HEAT SHIELD 80K LOWER-7 WLDMT | 1 |
| 33 | 904685 | HEAT SHIELD 80K LOWER-6 WLDMT | 1 |
| 32 | 904675 | HEAT SHIELD 80K LOWER-5 WLDMT | 1 |
| 31 | 904665 | HEAT SHIELD 80K LOWER-4 WLDMT | 1 |
| 30 | 904625 | HEAT SHIELD 80K LOWER-3 WLDMT | 1 |
| 29 | 904605 | HEAT SHIELD 80K LOWER-2 WLDMT | 1 |
| 28 | 904335 | HEAT SHIELD 80K LOWER-1 WLDMT | 1 |
| 27 | 905015 | 4K SHIELD LOWER-9 ASSY | 1 |
| 26 | 889115 | 4K SHIELD LOWER WELD-8 | 1 |
| 25 | 889105 | 4K SHIELD LOWER WELD-7 | 1 |
| 24 | 889125 | 4K SHIELD LOWER WELD-6 | 1 |
| 23 | 875665 | 4K SHIELD LOWER WELD-5 | 1 |
| 22 | 817705 | 4K SHIELD LOWER WELD-4 | 1 |
| 21 | 785655 | 4K SHIELD LOWER WELD-3 | 1 |
| 20 | 785645 | 4K SHIELD LOWER WELD-2 | 1 |
| 19 | 785635 | 4K SHIELD LOWER WELD-1 | 1 |
| 18 | | CLAMP WAPMUP | 9 |
| 17 | 732061 | PIPE 2K-WARMUP COOLDOWN WLDMT | 1 |
| 16 | 902925 | CRYOGENIC MONITOR W-SUPPORT ASSY | 3 |
| 15 | 885405 | SUPPORT NEEDLE-B-L ASSY | 1 |
| 14 | 885235 | SUPPORT NEEDLE-B-R ASSY | 1 |
| 13 | 789615 | NEEDLE SUPPORT-R ASSY | 19 |
| 12 | 788515 | NEEDLE SUPPORT-L ASSY | 19 |
| 11 | 880115 | VAT SUPPORT ASSY | 1 |
| 10 | 880215 | VAT SUPPORT CAVITY ASSY | 1 |
| 9 | 899145 | BRAID TUNER MOTOR ASSY | 8 |
| 8 | 899075 | BRAIDS HOM-1 ASSY | 8 |
| 7 | 899105 | BRAIDS HOM-2 ASSY | 8 |
| 6 | 729431 | INTERCEPT 4-5K MC | 8 |
| 5 | 732931 | HEAT SHIELD MC-B | 8 |
| 4 | 732941 | HEAT SHIELD MC-A | 8 |
| 3 | 732961 | PIPE 2K WARMUP-COOLDOWN WLDMT | 1 |
| 2 | 819885 | CAVITY STRING ASSY-T4CM | 1 |
| 1 | 840173 | COLD MASS UPPER-ASSY | 1 |

PARTS LIST

NOTES (UNLESS OTHERWISE SPECIFIED):

1. ALL DIMENSIONS, UNLESS SPECIFIED, ARE IN ROOM TENPERATURE.
2. ASSEMBLY PER FERMILAB ENGINEERING SPECIFICATION: 5520.000-ES-
3. MAINTAIN A DIRT & GREASE - FREE WORKING ENVIRONMENT, KEEPS ALL PARTS AND ASSEMBLIES FREE OF DIRT, GREASE, OIL AND CHIPS.
4. FABRICATE ALL PIPING CONNECTION PER ASME B31.3, NORMAL FLUID SEVICES.(?)
5. ALL CONTINUOUS WELDS TO BE VACUUM LEAK TIGHT. NO LEAK SHALL BE DETECTABLE ON THE MOST SENSITIVE SCALE OF A HELIUM LEAK DETECTOR WITH A MINIMUM SENSITIVITY OF $10^{-10}$ ATM. CC/SEC.(???)
6. PROTECT ALL SEALING SURFACES FROM DENTS AND SCRATCHES.

| NEXT ASSY | USED ON |
|---|---|
| APPLICATION | |

FINISH: N/A

MATERIAL: N/A

UNLESS OTHERWISE SPECIFIED:
DIMENSIONS ARE IN MILLIMETERS
INTERPRET DIM PER ASME Y14.5M-1994
BREAK ALL SHARP EDGES .75 MAX.
ALL MACH. SURFACES 3.2 MAX.

TOLERANCES: X ± 2, .X ± 0.8, .XX ± 0.13, ANGLE ± 1°

THIRD ANGLE PROJECTION

| | | DATE |
|---|---|---|
| DRAWN BY | Y. OLROV | 16DEC11 |
| CHECKED BY | | DATE |
| ENGINEERED BY | | DATE |
| DATABASE | DESY EDMS | TEAM/GROUP |
| CAD | I-DEAS | SOLID MODEL NO. D00000000611633 |

FERMI NATIONAL ACCELERATOR LABORATORY
UNITED STATES DEPARTMENT OF ENERGY
P.O. BOX 500, BATAVIA, IL 60510-0500

TITLE
# ILC TYPE IV CRYOMODULE T4CM WITN DOUBLET ASSY COLD_MASS_T4CM_W_MAG_ASSY

| SIZE | CAGE CODE | DWG NO. | REV |
|---|---|---|---|
| A0 | 0U5R6 | D00000000815615 | A |

SCALE 1:12.5 | DO NOT SCALE DRAWING | SHEET 1 OF 1

| REVISION HISTORY | | | | | |
|---|---|---|---|---|---|
| CAD MAINTAINED. CHANGES SHALL BE INCORPORATED BY THE DESIGN ACTIVITY. | | | | | |
| ZONE | REV | DESCRIPTION | DATE | CHECKED | APPROVED |
| | A | INITIAL RELEASE | | | |

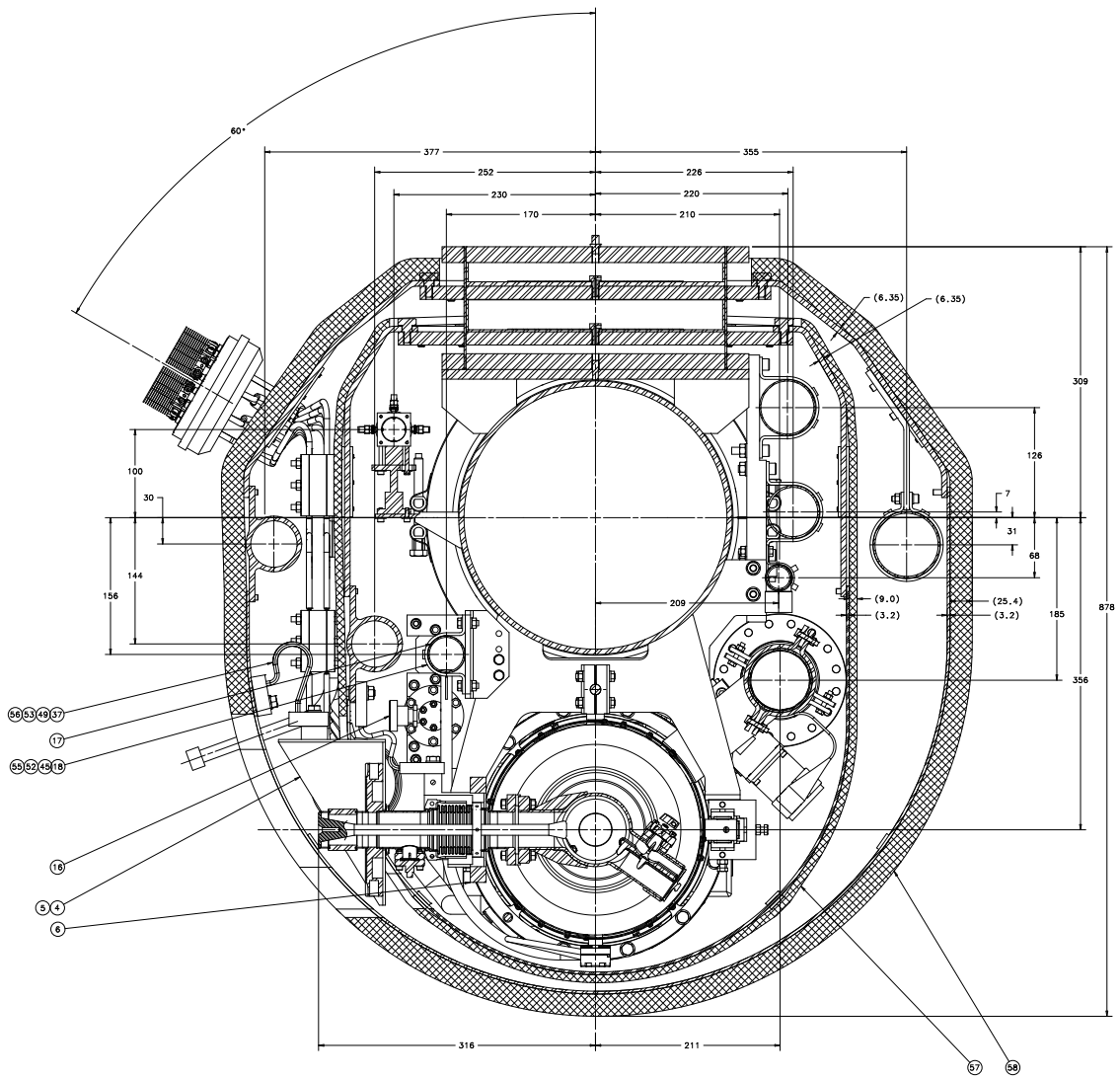


SECTION B-B
SCALE 1/2
(SEE SHEET #1)

| | |
|---|---|
| - | - |
| NEXT ASSY | USED ON |
| APPLICATION | |

FINISH: N/A

MATERIAL: N/A

UNLESS OTHERWISE SPECIFIED:
DIMENSIONS ARE IN MILLIMETERS
INTERPRET DIM PER ASME Y14.5M-1994
BREAK ALL SHARP EDGES .75 MAX.
ALL MACH. SURFACES 3.2 MAX.

TOLERANCES: X ± 2, .X ± 0.8, .XX ± 0.13, ANGLE ± 1°

THIRD ANGLE PROJECTION

| | |
|---|---|
| DRAWN BY: Y. OLROV | DATE: 26AUG11 |
| CHECKED BY | DATE |
| ENGINEERED BY | DATE |
| DATABASE: DESY EDMS | TEAM/GROUP |
| CAD: I-DEAS | SOLID MODEL NO.: D00000000611633 |

FERMI NATIONAL ACCELERATOR LABORATORY
UNITED STATES DEPARTMENT OF ENERGY
P.O. BOX 500, BATAVIA, IL 60510-0500

TITLE: ILC TYPE IV CRYOMODULE
T4CM WITN DOUBLET ASSY
COLD_MASS_T4CM_W_MAG_ASSY

| SIZE | CAGE CODE | DWG NO. | REV |
|---|---|---|---|
| A0 | 0U5R6 | D00000000815615 | A |

SCALE 1:12.5 | DO NOT SCALE DRAWING | SHEET OF 1

| REVISION HISTORY | | | | | |
|---|---|---|---|---|---|
| CAD MAINTAINED. CHANGES SHALL BE INCORPORATED BY THE DESIGN ACTIVITY. | | | | | |
| ZONE | REV | DESCRIPTION | DATE | CHECKED | APPROVED |
| | A | INITIAL RELEASE | | | |

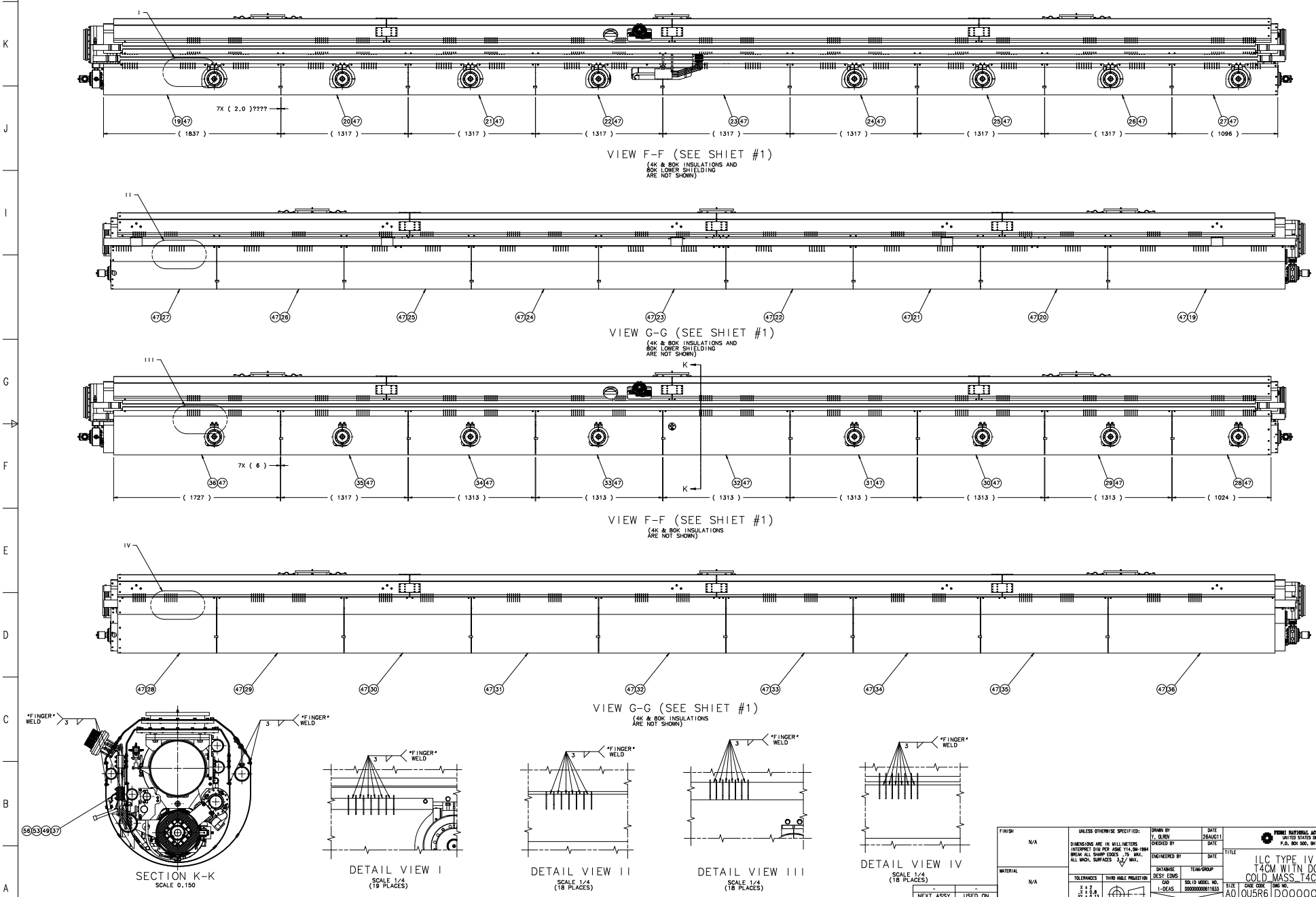


VIEW F-F (SEE SHIET #1)
(4K & 80K INSULATIONS AND 80K LOWER SHIELDING ARE NOT SHOWN)



VIEW G-G (SEE SHIET #1)
(4K & 80K INSULATIONS AND 80K LOWER SHIELDING ARE NOT SHOWN)



VIEW F-F (SEE SHIET #1)
(4K & 80K INSULATIONS ARE NOT SHOWN)



VIEW G-G (SEE SHIET #1)
(4K & 80K INSULATIONS ARE NOT SHOWN)



SECTION K-K
SCALE 0.150

DETAIL VIEW I
SCALE 1/4
(19 PLACES)

DETAIL VIEW II
SCALE 1/4
(18 PLACES)

DETAIL VIEW III
SCALE 1/4
(18 PLACES)

DETAIL VIEW IV
SCALE 1/4
(18 PLACES)

| NEXT ASSY | USED ON |
|---|---|
| - | - |
| APPLICATION | |

FINISH: N/A

MATERIAL: N/A

UNLESS OTHERWISE SPECIFIED:
DIMENSIONS ARE IN MILLIMETERS
INTERPRET DIM PER ASME Y14.5M-1994
BREAK ALL SHARP EDGES .75 MAX.
ALL MACH. SURFACES 3.2 MAX.

TOLERANCES: X ± 2, .X ± 0.8, .XX ± 0.13, ANGLE ± 1°

THIRD ANGLE PROJECTION

DRAWN BY: Y. OLROV — DATE: 26AUG11
CHECKED BY — DATE
ENGINEERED BY — DATE
DATABASE: DESY EDMS — TEAM/GROUP
CAD: I-DEAS — SOLID MODEL NO.: D00000000611633

FERMI NATIONAL ACCELERATOR LABORATORY
UNITED STATES DEPARTMENT OF ENERGY
P.O. BOX 500, BATAVIA, IL 60510-0500

TITLE
ILC TYPE IV CRYOMODULE
T4CM WITN DOUBLET ASSY
COLD_MASS_T4CM_W_MAG_ASSY

| SIZE | CAGE CODE | DWG NO. | REV |
|---|---|---|---|
| A0 | 0U5R6 | D00000000815615 | A |

SCALE 1:12.5 — DO NOT SCALE DRAWING — SHEET OF 1