NOTES (UNLESS OTHERWISE SPECIFIED):

1. ALL DIMENSIONS, UNLESS SPECIFIED, ARE IN ROOM TENPERATURE.
2. ASSEMBLY PER FERMILAB ENGINEERING SPECIFICATION: 5520.000-ES-
3. CLEAN ALL WELDABLE SURFACES BEFORE WELDING.
4. MAINTAIN A DIRT & GREASE - FREE WORKING ENVIRONMENT, KEEPS ALL PARTS AND ASSEMBLIES FREE OF DIRT, GREASE, OIL AND CHIPS.
5. FABRICATE ALL PIPING CONNECTION PER ASME B31.3, MORMAL FLUID SEVICES.
6. THE FOLLOWING DOCUMENTS SHALL BE SUPPLIED:
   A. WELDS PROCEDURE SPECIFICATION (WPS).
   B. PROCEDURE QUALIFICATION RECORDS (PQR).
   C. WELDER PERFORMANCE QUALIFICATION (WPQ).
   D. EXAMINATION REPORT.
7. ALL CONTINUOUS WELDS TO BE VACUUM LEAK TIGHT. NO LEAK SHALL BE DETECTABLE ON THE MOST SENSITIVE SCALE OF A HELIUM LEAK DETECTOR WITH A MINIMUM SENSITIVITY OF 10^{-10} ATM. CC/SEC.
8. PROTECT ALL SEALING SURFACES FROM DENTS AND SCRATCHES.

REVISION HISTORY

CAD MAINTAINED. CHANGES SHALL BE INCORPORATED BY THE DESIGN ACTIVITY.

ZONE	REV	DESCRIPTION	DATE	CHECKED	APPROVED
	A	INITIAL RELEASE			

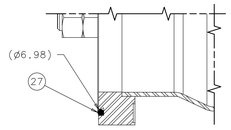

DETAIL_SECTION L
SCALE 0.400

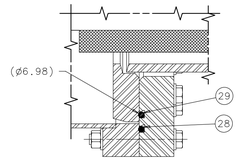

DETAIL_SECTION K
SCALE 0.400

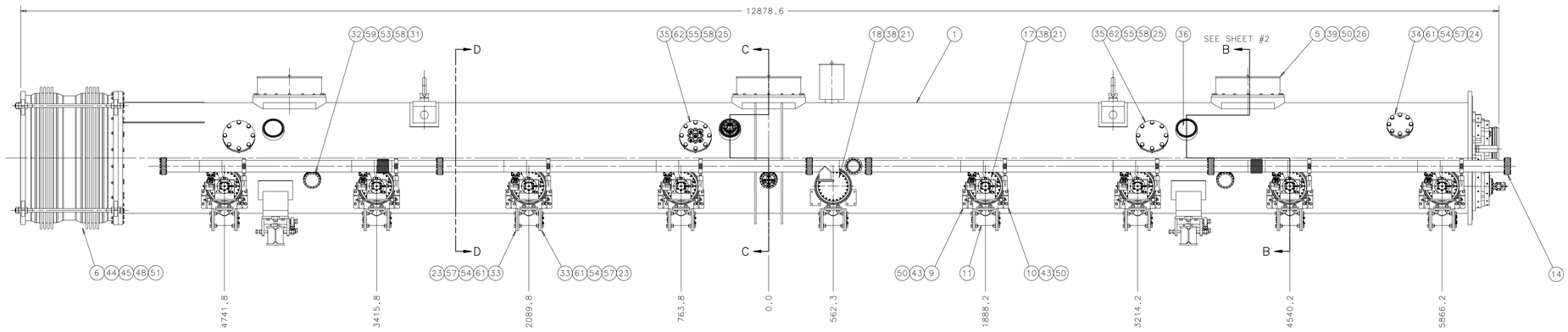

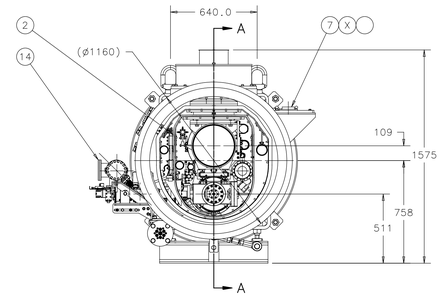

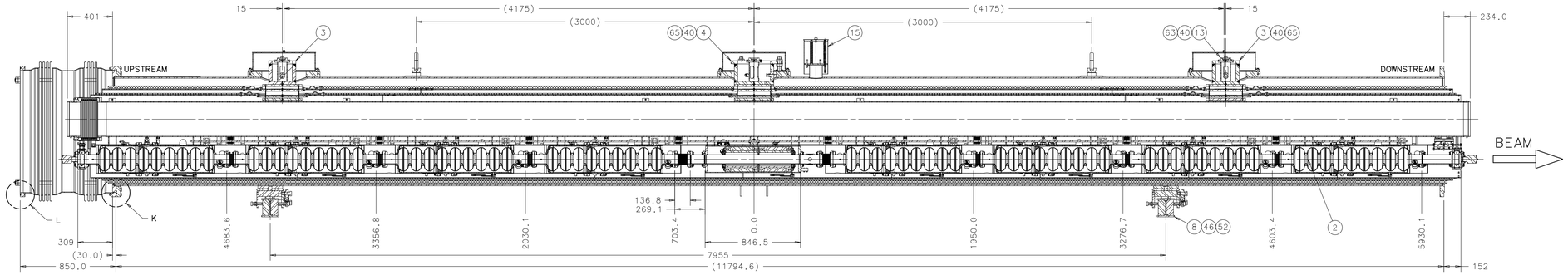

SECTION A-A

ITEM	P.I.N.	DESCRIPTION	QTY
65	MB-442643	PIN LOCATING	3
64	COM'L	PAN SCREW M4-0.7X8.0, 18-8 SS	64
63	COM'L	DOWEL PIN M6X24, 18-8 SS	3
62	COM'L	HHCS 3/4-10X2.5, 18-8 SS	24
61	COM'L	HHCS 5/8-11X2.5, 18-8 SS	88
60	COM'L	HHCS 5/8-11X2.0, 18-8 SS	36
59	COM'L	HHCS 5/16-24X2.5, 18-8 SS	48
58	COM'L	HEX NUT 3/4-10, SILICONE BRONSE	24
57	COM'L	HEX NUT 5/8-11, SILICONE BRONSE	124
56	COM'L	HEX NUT 5/16-24, SILICONE BRONSE	48
55	COM'L	WASHER 3/4, 18-8 SS	48
54	COM'L	WASHER 5/8, 18-8 SS	248
53	COM'L	WASHER 5/16, 18-8 SS	96
52	COM'L	WASHER M20, 18-8 SS	8
51	COM'L	WASHER M12, 316 SS	92
50	COM'L	WASHER M10, 316 SS	96
49	COM'L	WASHER M6, 316 SS	144
48	COM'L	HEX NUT M12-1.75, 18-8 SS	24
47	COM'L	HEX NUT M6-1.0, 18-8 SS	96
46	COM'L	HHCS M20-2.0X50, 18-8 SS	8
45	COM'L	HHCS M12-1.75X100, 18-8 SS	24
44	COM'L	HHCS M12-1.75X55, 18-8 SS	24
43	COM'L	HHCS M10-1.5X25, 18-8 SS	48
42	COM'L	HHCS M6-1.0X40, 316 SS	96
41	COM'L	HHCS M6-1.0X25, 316 SS	48
40	COM'L	SHCS M16-2.0X30, 18-8 SS	12
39	COM'L	SHCS M10-1.5X35, 18-8 SS	48
38	COM'L	SHCS M8-1.5X30, 316 SS	214
37	COM'L	SHCS M6-1.0X12, 18-8 SS	9
36		FLANGE CL PORT BLANK	2
35	COM'L	FLANGE ASA, 11.0"-OD, BLANK, OR MDC P/N 160037 (FOR FLANGE D)	3
34	COM'L	FLANGE ASA, 9.0"-OD, BLANK, OR MDC P/N 160028 (FOR FLANGE K)	2
33	COM'L	FLANGE ASA, 7.5"-OD, BLANK, OR MDC P/N 160006 (FOR FLANGES A & B)	18
32	COM'L	FLANGE CF, 6.0"-OD, BLANK MDC P/N 110025 (FOR FLANGE C)	3
31	COM'L	COPPER GASKET MDC P/N 191013	3
30	COM'L	COPPER GASKET MDC P/N 191004	24
29	COM'L	O-RING, 1057 MM-ID, 6.985MM-DIA	1
28	COM'L	O-RING, 1090 MM-ID, 6.985MM-DIA	1
27	COM'L	O-RING, 1124 MM-ID, 6.985MM-DIA	1
26	COM'L	O-RING, 568.3 MM-ID, 5.334MM-DIA	3
25	COM'L	VITON O-RING, ASA-11, MDC P/N 540024	3
24	COM'L	VITON O-RING, ASA-9, MDC P/N 540022	2
23	COM'L	VITON O-RING, ASA-7, MDC P/N 540020	18
22	COM'L	VITON O-RING, ASA-6, MDC P/N 540018	9
21	COM'L	CENTERING RING WITH O-RING ISO-200	9
20	COM'L	VAT VALVE ANGLE 54032-GE02-0002	8
19	COM'L	FLAXIBLE COUPLING MDC P/N 400003	8
18		BIG FLANGE ON VACUUM VESSL BLANK	1
17	2964328/0.008	BIG FLANGE ON VACUUM VESSL	8
16	882165	ANTENNA ADJUST MECHANISM	8
15	919085	VALVE RELIEF-4 INCH-0.5 PSI	1
14	883425	LINE COUPLING-PUMPING T4CM ASSY	1
13	MB-441597	MOUNT TAYLOR-HOBSON	3
12	0988356/0.00	FTP-EINKOPPLER III	8
11	793015	REDUCING TEE FLANGE WLDMT	8
10	737051	RIGHT MOUNTING BRACKET ASSY	8
9	736181	LEFT MOUNTING BRACKET ASSY	8
8	879725	BASE ASSY-SUPPORT	2
7	MC-441519	SURVEY PLATE ASSEMBLY	3
6	756891	BELLOWS T4CM ASSEMBLY LARGE 850	1
5	787405	SUPPORT COVER WLDMNT	3
4	788095	COLDMASS SUPPORT FIXED AASY	1
3	788105	COLDMASS SUPPORT SLD ASSY	2
2	815615	COLD MASS T4CM W-MAG ASSY	1
1	888385	VESSEL CRYOSTAT FINAL MACHINING	1

PARTS LIST

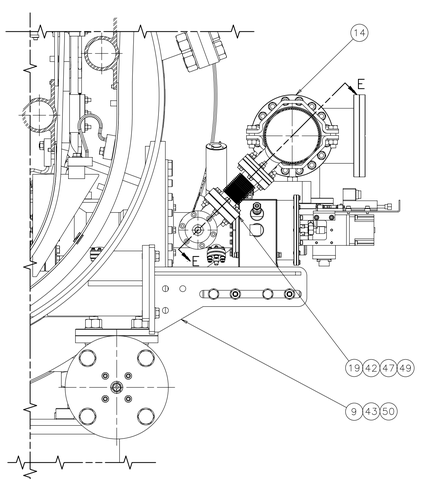

SECTION D-D
SCALE 1/4

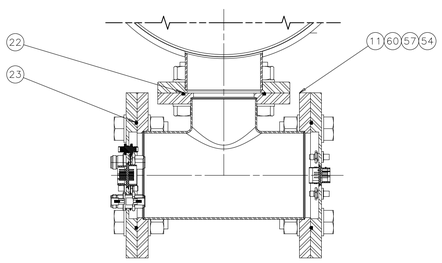

SECTION F-F
SCALE 0.400

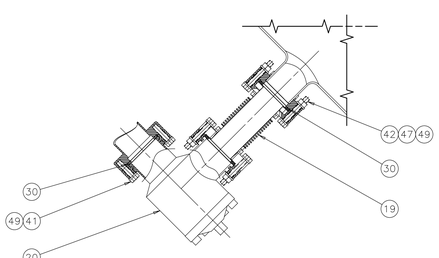

SECTION E-E
SCALE 0.400

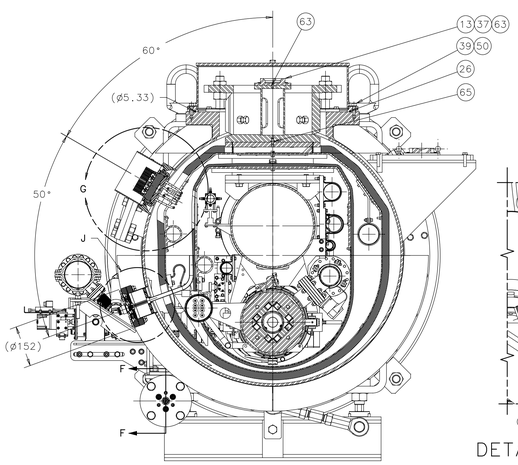

SECTION C-C
SCALE 1/8

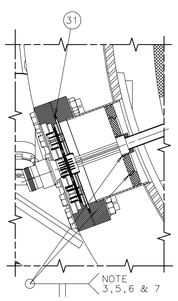

DETAIL_SECTION J
SCALE 0.400

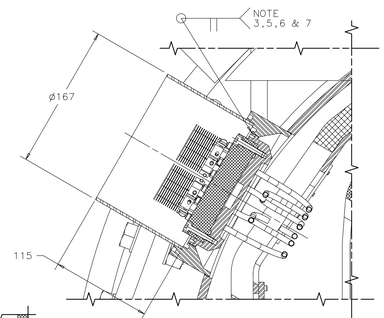

DETAIL_SECTION G
SCALE 0.400

NEXT ASSY	USED ON
APPLICATION	

FINISH: N/A

MATERIAL: N/A

UNLESS OTHERWISE SPECIFIED:
DIMENSIONS ARE IN MILLIMETERS
INTERPRET DIM PER ASME Y14.5M-1994
BREAK ALL SHARP EDGES .75 MAX.
ALL MACH. SURFACES 3.2 MAX.

TOLERANCES: X ± 2, .X ± 0.8, .XX ± 0.13, ANGLE ± 1°

THIRD ANGLE PROJECTION

DRAWN BY: Y.ORLOV — DATE: 14OCT11
CHECKED BY — DATE
ENGINEERED BY — DATE
DATABASE: DESY EDMS — TEAM/GROUP
CAD: I-DEAS — SOLID MODEL NO.: N/A

FERMI NATIONAL ACCELERATOR LABORATORY
UNITED STATES DEPARTMENT OF ENERGY
P.O. BOX 500, BATAVIA, IL 60510-0500

TITLE
ILC TYPE IV CRYOMODULE T4CM-WITH DOUBLET MAGNET ASSEMBLY T4CM_W-MAG_COMPLETE_ASSEMBLY

SIZE	CAGE CODE	DWG NO.	REV
A0	0U5R6	D00000000809095	A

SCALE 1:16 — DO NOT SCALE DRAWING — SHEET 1 OF 1

Created: 15:31:46 on 13-10-11 (D-M-Y) By: orlov State: 1-INITIAL

REVISION HISTORY					
CAD MAINTAINED. CHANGES SHALL BE INCORPORATED BY THE DESIGN ACTIVITY.					
ZONE	REV	DESCRIPTION	DATE	CHECKED	APPROVED
	A	INITIAL RELEASE			

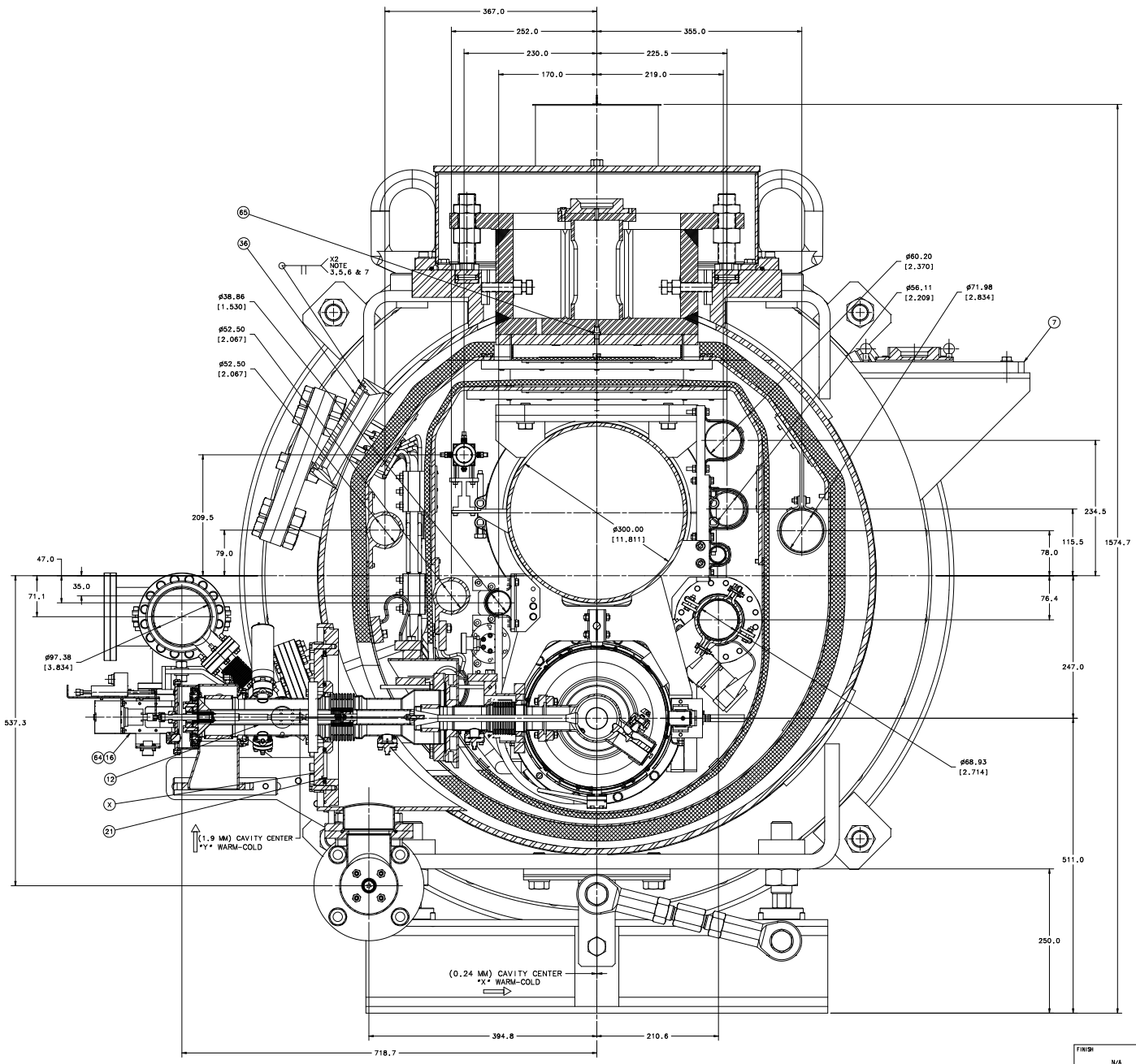

SECTION B-B
SCALE 0.400
(SEE SHEET #1)

NEXT ASSY	USED ON
-	-
APPLICATION	

FINISH: N/A

MATERIAL: N/A

UNLESS OTHERWISE SPECIFIED:
DIMENSIONS ARE IN MILLIMETERS
INTERPRET DIM PER ASME Y14.5M-1994
BREAK ALL SHARP EDGES .75 MAX.
ALL MACH. SURFACES 3.2 MAX.

TOLERANCES: X ± 2, .X ± 0.8, .XX ± 0.13, ANGLE ± 1°

THIRD ANGLE PROJECTION

DRAWN BY: Y.OR.OV — DATE: 14OCT11
CHECKED BY — DATE
ENGINEERED BY — DATE
DATABASE: DESY EDMS — TEAM/GROUP
CAD: I-DEAS — SOLID MODEL NO.: N/A

FERMI NATIONAL ACCELERATOR LABORATORY
UNITED STATES DEPARTMENT OF ENERGY
P.O. BOX 500, BATAVIA, IL 60510-0500

TITLE
ILC TYPE IV CRYOMODULE
T4CM-WITH DOUBLET MAGNET ASSEMBLY
T4CM_W-MAG_COMPLETE_ASSEMBLY

SIZE	CAGE CODE	DWG NO.	REV
A0	0U5R6	D00000000809095	A

SCALE 1:16 — DO NOT SCALE DRAWING — SHEET OF 1