HiTECH
Helium Vessel
Raw - Tube
4 pcs
+ 16 pcs.

WELDSTAR

OLD VALUES...NEW IDEAS

Weldstar Fax Number: (630) 844-0963

If you have any problems reading this fax transmittal, please contact (630) 859-3100.

TO: Simon Sorsher

FROM: Dan Meisch

DATE: 10/13/08

You should receive 7 page(s) including this coversheet

SUBJECT:

Hello Simon:

I've sent over the Titanium Procedures.

Thanks

Dan.

QW-482 WELDING PROCEDURE SPECIFICATION (WPS)

(See QW-200.1, Section IX, ASME Boiler and Pressure Vessel Code)

Company Name: Hi-Tech Manufacturing By: Simon Sorsher

Welding Procedure Specification No.: GT-5101 Date: December 10, 2007 Supporting PQR No.(s): GT-5101

Revision No.: 1 Date: December 18, 2007

Welding Process(es): GTAW Types(s): Manual

(Automatic, Manual, Machine, or Semi-Auto.)

JOINTS (QW-402)

Joint Design: Butt Joint; Single Vee-groove

Backing (Yes): ____ (No) X

Backing Material (Type): None Required

(Refer to both backing and retainers.)

☐ Metal ☐ Nonfusion Metal

☐ Nonmetallic ☐ Other

Sketches, Production Drawing, Weld Symbols or Written Description should show the general arrangement of the parts to be welded. Where applicable, the root spacing and the details of weld groove may be specified.

(At the option of the Mfg., sketches may be attached to illustrate joint design, weld layers and bead sequence, e.g. for notch toughness procedures, for multiple process procedures, etc.)

Details

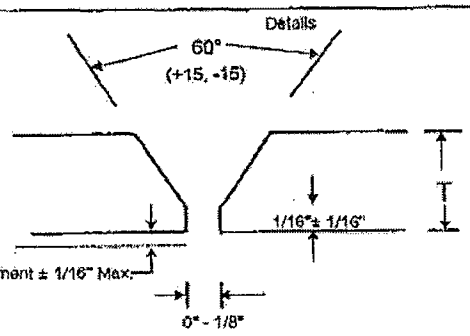

T = 1/16" thru 0.250

BASE METALS (QW-403)

P-No. 51 Group No. All to P-No. 51 Group No. All

OR

Specification type and grade

to Specification type and grade

OR

Chem. Analysis and Mech. Prop.

to Chem. Analysis and Mech. Prop.

Thickness Range:

Base Metal: Groove 1/16" thru 0.250 Fillet Unlimited Thru 3/4" Throat

Pipe Dia. Range: Groove All Diameters Fillet All Diameters

Retainers None

Other

*FILLER METALS (QW-404)	GTAW	
Spec. No. (SFA)	A5.18	
AWS No. (Class)	ERTi-2	
F-No.	51	
A-No.	None Assigned	
Size of Filler Metals	1/16", 3/32" and/or 1/8"	
Deposited Weld Metal Thickness Range:		
Groove	Thru 0.250	
Fillet	Thru 3/4" Throat	
Electrode-Flux (Class)	N/A	
Additional Flux	None	
Consumable Insert	None	
Filler Metal Product Form	Bare (Solid) Filler Wire	
Supplemental Filler Metal	N/A	
Alloy Elements	N/A	
Other	(See Note 1)	

*Each base metal-filler metal combination should be recorded individually.

NOTE 1: All Filler Materials shall be stored in closed and sealed containers until issued for use and then kept in the container or sheath until selected for welding. Filler Metal Rods shall be cleaned as the base metal immediately before use or cleaned and placed in a protective atmosphere until used. Filler Rod shall be kept under the inert gas shield when being used. Should the Filler Rod become contaminated by being outside of the gas shield when over 1000° F., the affected are shall be cut off.

QW-482 (Back)

WPS No. GT-5101 Rev. 1

POSITIONS (QW-405)

Position(s) of Groove: All Positions
Welding Progression: Up X Down
Position(s) of Fillet: All Positions

POSTWELD HEAT TREATMENT (QW-407) NONE

Temperature Range: N/A
Time Range: N/A

PREHEAT (QW-406)

Preheat Temp. Min.: 50 ° F. Minimum
Interpass Temp. Max.: 250 ° F. Maximum
Preheat Maintenance: 50 ° F. Minimum

GAS (QW-408)
(See Note 3)

	Gas(es)	Percent Composition (Mixture)	Flow Rate
GTAW Shielding	Argon	Welding Grade	10 - 35 CFH
GMAW Shielding	N/A	N/A	N/A
Trailing (Note 2)	Argon	Welding Grade	10 - 35 CFH
Backing	Argon	Welding Grade	5 - 20 CFH

ELECTRICAL CHARACTERISTICS (QW-409)

Current AC or DC: Direct Current Polarity: Electrode Negative Pulsing Current: Non Pulsed
Amps (Range): See Chart Volts (Range): See Chart Max. Heat Input: N/A kJ/in.
(Amps and volts range should be recorded for each electrode size, position, and thickness, etc. This information may be listed in tabular form similar to that shown below.)

Note 2: The weld pool, solidified weld, Hot HAZ and the root side of the weld shall be protected until the temperature cools to below 800° F. Maximum Dew Point of Gas shall be -50° F.

Tungsten Electrode Size and Type: 3/32" and/or 1/8" EWCe-2 (2% Ceriated; Orange Tipped) Ground to a point.
(Pure Tungsten, 2% Thoriated, etc.)

Mode of Metal Transfer for GMAW: N/A
(Spray arc, short circuiting arc, etc.)

Electrode Wire feed speed range: N/A

TECHNIQUE (QW-410)

String or Weave Bead: String and/or Slight Weave
Orifice or Gas Cup Size: 3/4" thru1.25" (Gas Cup Nozzle Shall be oversized to cover a larger area). Use of Gas Lens required.
Initial and Interpass Cleaning (Brushing, Grinding, etc.) Base metal shall be cleaned within one inch of each side of the Weld Joint Minimum. Steam Clean, Hot Water and Detergent Wash and Non-Chlorinated Degreasing Solvents such as 100 % Acetone and Alcohol. Stainless Steel Wire Brush (Used on no other materials), Grind (Using Aluminum Oxide or Silicon Carbide Wheels) Grind Slowly to prevent heat build-up.
Method of Back Gouging: If required, Grind
Oscillation: N/A
Contact Tube to Work Distance: Electrode extension 1-1/2 times diameter past the end of the Nozzle. Arc length 1.5 Times Diameter
Multiple or Single Pass (per side): Single or Multiple Passes
Multiple or Single Electrodes: Single Electrode Spacing: N/A
Travel Speed (Range): See Chart
Peening: None
Closed to out Chamber: Flow Purged Chamber
Maximum Fill Pass Thickness: No single weld pass to be over 1/2" thick
Thermal Process: N/A
Other: NOTE 3: Gas hoses should be nonporous, flexible and made only of polytetrafluoroethyene (PTFE), polypropylene (PP), or high density polyetylene (HDPE). Fluorinated ethylene (FEP)-lined Tygon is recommended. Rubber hoses **SHALL NOT** be employed during welding.
The Bead should be a silver color and shiny. Any discoloration of the surface indicates contamination. A purple, Dark Blue to Light Blue, or Yellow to Gray to White coloration indicate excessive contamination.

Weld Layer(s)	Process	Filler Metal		Current		Volt Range	Travel Speed Range IPM	(e.g., Remarks, Comments, Hot Wire Addition, Technique, Torch Angle, Etc.)
		Filler Metal Classification	Electrode / Filler Metal Diameter	Polarity	Range			
Thru 1/8"	GTAW	ERTi-2	1/16" or 3/32"	DCEN	100 - 180	8 - 16	2 - 6 IPM	NOTE: Voltage and Travel Speeds are for information only. Actual values may vary.
1/8" and Over	GTAW	ERTi-2	3/32" or 1/8"	DCEN	150 - 250	10 - 15	2 - 8 IPM	

QW-483 PROCEDURE QUALIFICATION RECORD (PQR)

(See QW-200.2, Section IX, ASME Boiler and Pressure Vessel Code)

Record Actual Conditions Used to Weld Test Coupon.

Company Name: Hi-Tech Manufacturing
Procedure Qualification Record No.: GT-5101 Date: December 10, 2007
WPS No.: GT-5101
Welding Process(es): GTAW
Types (Manual, Automatic, Semi-Auto.): Manual

JOINTS (QW-402)

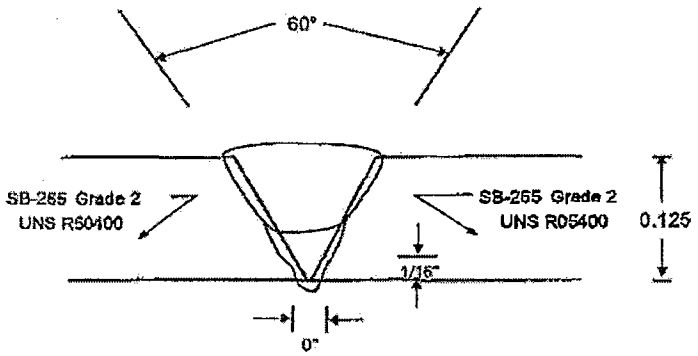

Groove Design of Test Coupon

(For combination qualifications, the deposited weld metal thickness shall be recorded for each filler metal or process used.)

BASE METALS (QW-403)

Material Spec.	SB-265	to	SB-265
Type or Grade	Grade 2	to	Grade 2
P-No.	51	Group No. ---	to P-No. 51 Group No. ---

Thickness of Test Coupon: 0.125
Diameter of Test Coupon: 1/8" Thick Plate
Retainers Employed: None
Other:

POSTWELD HEAT TREATMENT (QW-407) NONE

Temperature: N/A
Time: N/A
Other:

GAS (QW-408)

Percent Composition

	Gas(es)	(Mixture)	Flow Rate
GTAW Shielding	Argon	Welding Grade	25 CFH
FCAW Shielding	N/A	N/A	N/A
Trailing	Argon	Welding Grade	20 CFH
Backing	Argon	Welding Grade	8 CFH

FILLER METALS (QW-404)

	GTAW	
SFA Specification	A5.16	
AWS Classification	ERTi-2	
Filler Metal F-No.	51	
Weld Metal Analysis A-No.	None Assigned	
Size of Filler Metal	1/16"	
Filler metal product form	Bare (Solid Wire)	
Consumable Inserts	None	
Additional Flux	None	
Deposited Weld Metal	≈1/8" 0.125	
Deposited Weld Metal Layers	2	
Supplemental Filler Metal	N/A	
Alloy Elements	N/A	

ELECTRICAL CHARACTERISTICS (QW-409)

Current: Direct Current
Polarity: GTAW - Electrode Negative
Amps. GTAW 120 - 120 Volts 10 - 11
Amps. SMAW N/A - Volts N/A -
Tungsten Electrode Size: 3/32" EWCe-2 (2% Ceriated - Orange Tipped
Heat Input: GTAW 13.20 kJ/in. SMAW N/A kJ/in.
Pulsing Current: Non Pulsed
Wire Feed Speed: N/A IPM

POSITION (QW-405)

Position of Groove: 1G (Flat)
Weld Progression (Uphill, Downhill): N/A
Other:

PREHEAT (QW-406)

Preheat Temp.: 70 ° F. (Ambient)
Interpass Temp.: 200 ° F. Maximum
Other:

TECHNIQUE (QW-410)

	GTAW	SMAW
Travel Speed	6.0 - 6.0 IPM	N/A IPM
String or Weave Bead	Stringer	
Oscillation	N/A	
Multipass or Single Pass (per side)	Multipass	
Single or Multiple Electrodes	Single Spacing N/A	
Gas cup size	3/4" With 1" Gas Lens (Trailing)	
Interpass Cleaning	Acetone Wipe and Brushing	
Back gouge Method	None	
Peening	None	
Oscillation	N/A Closed to Out Chamber	Flow Purged Chamber
Thermal Process	N/A (Applies to P11A and P11B)	
Other	No single weld pass was over 1/2" thick	

QW-483 (Back)

PQR No. GT-5101

Tensile Test (QW-150)

Specimen No.	Width	Thickness	Area	Ultimate Total Load lb.	Ultimate Unit Stress psi	Type of Failure & Location
11597-T1	0.922	0.129	0.119	8,200	68,943	Ductile - Base Metal
11597-T2	0.898	0.129	0.116	7,900	68,196	Ductile - Base Metal

Guided-Bend Tests (QW-160)

Type and Figure No.	Results
Two Face Bends; Figure #QW-462.3(a)	Two Face Bends - Acceptable
Two Root Bends; Figure #QW-462.3(a)	Two Root Bends - Acceptable

Toughness Tests (QW-170)

Specimen No.	Notch Location	Notch Type	Specimen Size	Test Temp.	Impact Values	Lateral Expansion		Drop Weight	
						% Shear	.001"	Break	No Break
N/A									
N/A									
N/A									
N/A									
N/A									
N/A									

Fillet-Weld Test (QW-180)

Result - Satisfactory: Yes _____ No _____ Penetration into Parent Metal: Yes _____ No _____

Macro - Results _____

Other Tests

Type of Test _____

Deposit Analysis _____

Other _____

Hardness Measurements: Hardness measurements are recorded in Hardness Rockwell B Scale

Location	1	2	3	AVG.
Base Metal P 51	N/A	N/A	N/A	
HAZ P 51	N/A	N/A	N/A	
Weld Metal	N/A	N/A	N/A	

Location	1	2	3	AVG.
HAZ P 51	N/A	N/A	N/A	
Base Metal P 51	N/A	N/A	N/A	
	N/A	N/A	N/A	

Welder's Name Tracz Stainslaw Clock No. _____ Stamp No. S1710

Tests conducted by: Calumet Testing Services Laboratory Test No. CTS Job No. 11597

We certify that the statements in this record are correct and that the test welds were prepared, welded, and tested in accordance with the requirements of Section IX of the ASME Code

Manufacturer Hi-Tech Manufacturing

Date December 18, 2007 By _____

(Detail of record of tests are illustrative only and may be modified to conform to the type and number of tests required by the Code)

Calumet Testing Services
1945 N. Griffith Blvd.
Griffith, Indiana 46319
(219) 923-9800—(708) 474-5860

X TENSILE TEST REPORT
X BEND TEST REPORT
___ HARDNESS TEST REPORT

CUSTOMER: Hi-Tech Manufacturing JOB NO. 11597
SAMPLE PQR GT-5101 SB-265 Type 2 P51
CODE ASME Sec. IX EDITION 2004/2006

Welder: Tracz Stainslaw
ID: S1710

TENSILE RESULTS:

Specimen No.	Width inch	Thickness inch	Area Sq. in.	Yield Load (lb.)	Max. load (lb.)	Yield Strength (psi)	Ultimate Strength (psi)
11597-T1	0.922	0.129	0.119	N/A	8,200	N/A	68,943
11597-T2	0.898	0.129	0.116	N/A	7,900	N/A	68,196

Specimen No.	ELONGATION (% INCH)	Diameter (inch)	Character & Location of Fracture
11052-T1	N/A	N/A	Ductile/Base metal
11052-T2	N/A	N/A	Ductile/Base metal

BEND RESULTS: Figure No. QW-462.3(a)

Side Bend N/A Side Bend N/A Side Bend N/A Side Bend N/A

11597-A Face Bend Acceptable
11597-B Root Bend Acceptable
11597-C Face Bend Acceptable
115970D Root Bend Acceptable

HARDNESS RESULTS: N/A

John A. Korienek

December 18, 2007
DATE

QW-484 SUGGESTED FORMAT FOR WELDER/WELDING OPERATOR PERFORMANCE QUALIFICATIONS (WPQ)

(See QW-301, Section IX, ASME Boiler and Pressure Vessel Code)

Welder's name: Tracz Stainslaw Clock number: Stamp no.: S1710
Welding process(es) used: GTAW Type: Manual
Identification of WPS followed by welder during welding of test coupon: GT-5101, Revision 1; Dated December 18, 2007
Base material(s) welded: SB-265 Grade 2 Thickness: 0.125

Manual or Semiautomatic Variables for Each Process (QW-350)	Actual Values	Range Qualified
Backing (metal, weld metal, welded from both sides, flux, etc.) (WQ-402)	None	With or Without Backing
ASME P-No. P No. 51 to ASME P-No. (QW-403)	P No. 51	P51, P52, P53, P61 and P62
[X] Plate [ ] Pipe (enter diameter, if pipe)	1/8" Plate	Note 1
Filler metal specification (SFA): A5.16 Classification (QW-404)	ERTi-2	
Filler metal F-No.	F51	F51 thru F55
Filler metal variety for GTAW, PAW (QW-404)	Bare (solid)	Bare (Solid) or Metal Cored
Consumable insert for GTAW OR PAW	None	None
Weld deposit thickness for each welding process No. of Layers 2	GTAW 0.125	Note 2
No. of Layers N/A	SMAW N/A	N/A
Welding position (1G, 5G, etc.) (QW-405)	1G (Rolled)	1G and 1F
Progression (uphill/downhill)	N/A	N/A
Backing gas for GTAW, PAW, or GMAW; fuel gas for OFW (QW-408)	Argon	With Backing Gas
GMAW transfer mode (QW-409)	N/A	N/A
GTAW welding current type/polarity	DCEN	DCEN

Machine Welding Variables for the Process Used (QW-360)	Actual Values	Range Qualified
Direct/remote visual control		
Automatic voltage control (GTAW)		
Automatic joint tracking		
Welding position (1G, 5G, etc.)		
Consumable insert		
Backing (metal, weld metal, welded from both sides, flux, etc.)		

Guided Bend Test Results

Guided Bend Test Type { } QW-462.2 (Side) Results { X } QW-462.3(a) (Trans. R & F) Type { } QW-462.3(b) (Long. R & F) Results

Two Face Bends	Passed PQR GT-5101on		
Two Root Bends	December 18, 2007		

Note 1: Diameters Qualified: Groove welds 2-7/8" O.D. and over, Unlimited diameters for fillet welds
Note 2: Thickness Qualified: Groove welds; Thru .250" Deposit Thickness with the GTAW Welding Process; Fillet welds Unlimited Thickness Weld Deposit for the GTAW Welding Process.

Visual examination results (QW-302.4): Acceptable
Radiographic test results (QW-304 and QW-305): N/A
(for alternative qualification of groove welds by radiography)
Fillet Weld - Fracture test _____ Length and percent of defects _____ in.
Macro test fusion _____ Fillet leg size _____ in. x _____ in. Concavity/convexity _____ in.
Welding test conducted by: Simon Sorsher
Mechanical tests conducted by: Calumet Testing Services Laboratory test no.: CTS Job No. 11597

We certify that the statements in this record are correct and that the test coupons were prepared, welded, and tested in accordance with the requirements of Section IX of the ASME Code.

Organization: Hi-Tech Manufacturing

Date: December 18, 2007 By: _____