1.3GHz Cryomodule 2 (CM2). Piping Engineering Note

Fermi National Accelerator Laboratory

29 July, 2011

Revision	*Date*	Section No.	Description
--	29-JUL-11	All	Original Issue
1	22 MAR 12	Amendment 1	Procedure to pressure test the piping at NML

CONTENTS

Descriptions *Page*

FESHM 5031.1 Piping Engineering Note Form 3

Amendment 1 - Pressure Test Procedure for CM2's Two-Phase Helium Line at NML 5

1. Introduction 7
    1.1 Summary discussion about a Director's exception 7
2. Piping overview 8
3. Pipeline Details Analyses. 10
    3.1 Cryogenic Line A – 1.8K Helium supply pipe 10
    3.2 Cryogenic Line B - Helium Gas Return Pipe 11
    3.3 Cryogenic Lines C, D, E and F–Thermal Shields 4.5K and 70K 13
        3.3.1 Cryogenic Line C – 4.5K Thermal Shield supply pipe 14
        3.3.2 Cryogenic Line D – 4.5K Thermal Shield return pipe 15
        3.3.3 Cryogenic Line E – 70K Thermal Shield supply pipe 16
        3.3.4 Cryogenic Line F – 70K Thermal Shield return pipe 16
    3.4 Cryogenic Line G – 2 Phase pipe 18
        3.4.1 (Cavity He Vessel) 2-Phase He Pipe 18
        3.4.2 (Quad He Vessel) 2-Phase He Pipe 21
        3.4.3 2-Phase He Pipe Bellow 23
    3.5 Cryogenic Line H– Warmup/Cooldown 25
4. Material properties 27
5. Pipeline Volumes and Thermal Motions 28

Cryomodule 2 Piping Engineering Note Appendix

APPENDIX A.1 – Pipe Summary 30
APPENDIX A.2 – DESY and INFN MECHANICAL DRAWINGS 32
APPENDIX A.3 – FNAL MECHANICAL DRAWINGS 42
APPENDIX A.4 – 5K & 80K piping relief calculation 48
APPENDIX A.5 – E. Zanon Inspection and Examination Reports 56
APPENDIX A.6 – DESY Certifications and Documents 183
APPENDIX A.7 – US Vendors Certifications and Documents 187
APPENDIX A.8 – Fermilab 2-phase Ti pipe welding Documents 199
APPENDIX A.9 – FERMILAB Pressure Test for 2-Phase pipe 207

References 211

FESHM 5031.1 PIPING ENGINEERING NOTE FORM

Prepared by: Yuriy Orlov Preparation Date: 1 June 2011

Piping System Title: 1.3GHz Cryomodule (CM2) Piping Engineering Note

Lab Location: NML, FERMILAB Lab Location code:

Purpose of system / System description: Weldments are subassemblies within the full cryomodule assembly.

Piping System ID Number:

Appropriate governing piping code: ASME B31.3, normal fluid service.

Fluid Contents: As described with in the full note: gaseous and liquid cryogenic helium and nitrogen.

Design Pressure: 4 to 18 Bar (Table 1) Design Temperature: 1.8 to 77K (Table 1)

Piping Materials: 316/316L St. Steel, Grade 2 Titanium, Aluminum 6060 T5

Drawing Numbers (PID's, weldments, etc.): As described with in the full note

Designer/Manufacturer: ZANON (Italy), Ameriflex (USA), Fermilab (USA)

Test Pressure: (various) Test Fluid: Test Date: (reports attached)

Statements of Compliance

Piping system conforms to FESHM 5031.1, installation ***is not*** exceptional: Yes / **No**

Piping system conforms to FESHM 5031.1, installation ***is*** exceptional and has been designed, fabricated, inspected, and tested using sound engineering principles: **Yes** / No

Reviewer's Signature: _____ Date: 9/6/11

D/S Head's Signature: _____ Date: 11/30/2011

ES&H Director's Signature: _____ Date: 11/9/11
(if exceptional)

Director's Signature or Designee: _____ Date: 11/7/11
(if exceptional) Stuart D. Henderson

Amendment 1

Reviewer's Signature 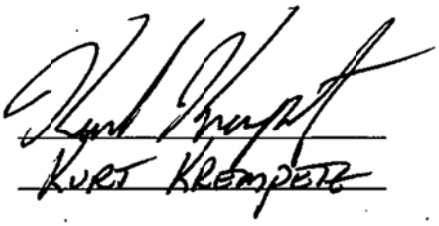 Date: 3/24/12

Print name: Kurt Krempetz

D/S Head's Signature 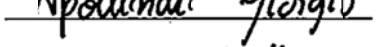 Date: 3/27/12

Print name: Giorgio Apollinari

Pipe Characteristics: Described in the note.

Relief Valve Information: System relief valves are located in adjoining devices. The required relief capacities for each circuit are included and compared to the available capacity of each relief valve.

System Documentation

Process and Instrumentation diagram appended? Yes. Schematic 5520.320-ME-458097 included.

Process and Instrumentation component list appended? Not applicable, see detail drawings.

Is an operating procedure necessary for safe operation? No
If 'yes', procedure must be appended.

Exceptional Piping System

Is the piping system or any part of it in the above category? **Yes** / No
If "Yes", follow the requirements for an extended engineering note for Exceptional Piping Systems.

Quality Assurance

List vendor(s) for assemblies welded/brazed off site: E. ZANON, Ameriflex INC, Hi Tech

List welder(s) for assemblies welded/brazed in-house: …….

Append welder qualification records for in-house welded/brazed assemblies.

Append all quality verification records required by the identified code (e.g. examiner's certification, inspector's certification, test records, etc.)

Amendment 1 - Pressure Test Procedure for CM2's Two-Phase Helium Line at NML

Mayling Wong
22 March 2012

One of the reasons for requiring an exception for the original piping engineering note was not pressure testing the piping assembly at New Muon Lab (NML). Since the note was initially released, a procedure was created to adjust the cavity length using the tuner motors so that the cavity would not be damaged during the pressure test. This amendment details the pressure test procedure for the two-phase helium piping once CM2 is installed at NML. Note that the original note includes the pressure test permit for the piping before CM2 is installed at NML. There is still an exception required for the piping due to the lack of supporting manufacturing documents, as stated in Section 1.1 of the original note.

Note1: Cavity beam-line is evacuated (0-bar), outside of the helium vessel is evacuated (0 bar).
Note 2: Before the test, the tuner motors will compress the cavities so that the cavities are not damaged during the pressure test. After the test, the tuner motors will return the cavities to their operational positions.
Note 3: The pressure test will also include an RF frequency measurement before, during, and after pressurization.
Note 4: The pressure testing permit will be written by NML personnel to follow this procedure. The procedure in the permit must also require the presence of the personnel listed in the approved document titled "Cryomodule 2 (CM2) Transportation and Installation at NML" (Phase – II: CM2 at NML before ORC is approved) which is posted online at http://ilc-dms.fnal.gov/Workgroups/CryomoduleDocumentation/CM2-folder/

MAWP = 2.0-bar at room temperature
Test pressure = 1.1*MAWP = 2.3 bar (18.5-psig)
(Pneumatic per ASME code)

Pressure Test Procedure:

1. Evacuate cavity string
2. Evacuate insulating vacuum of cryomodule
3. Using tuner motors, compress each cavity
4. First pressurize to 5-PSIG
5. Close valves on helium system to maintain for 2 minutes without loss of pressure.
6. Record frequency measurement.
7. Repeat at increased pressures, as listed in table 1
8. At 18.5-psig, hold at test pressure for 5 minutes.
9. Reduce pressure to design pressure. Hold for 10 minutes. Record frequency
10. Reduce pressure and hold as listed in table 1
11. After completion of pressure test, use tuner motors to return cavities to normal, stretched position.
12. Record frequency.

Table A1 below shows the pressure levels for each pause and what should be done at that pressure.

Table A1 – Sequence of Events for Pressure Test

Pressure (psig)	Dwell time (minutes)	Activity at pressure
0	--	Baseline RF test for relaxed cavities
5	~2	RF check
9	~2	RF check
11	~2	RF check
13	~2	RF check
15	~2	RF check
17	~2	RF check
18.5	5	Peak test pressure of 1.5 x MAWP
14.5	10*	Test pressure hold point*, RF check
11	~2	RF check
9	~2	RF check
0	--	RF check

*The pressure hold point of 16.5 psig is close to the MAWP. Dwell time is set long enough to assure us that pressure is not dropping.

Displacement Limits of Blade Tuner

The limits of displacement that cause the slim blade tuner to change the length of the vessel are defined by deformation of the tuner assembly and thus the frequency of the cavity. During operation, the cavity's default position is in a stretched state. However, during pressure testing of the two-phase helium supply line, the cavity must be compressed to prevent damage to the cavity due to external pressure of helium. Table A2 lists the displacement limits of the blade tuner, where 0-mm is the relaxed position of the cavity, a positive number describes the cavity in the stretched position, and a negative number describes the cavity in a compressed position.

Table A2 – Displacement Limits of Blade Tuner

Cavity Temperature	Max. Allowed Displacement	0 mm = cavity relaxed + = cavity stretched - = cavity compressed
300K	-0.3 mm to +1.0 mm	
2K	-1.0 mm to +3.0 mm	

1. Introduction

As part of an agreement between FNAL and DESY, a cryomodule "kit" was put together jointly by DESY and INFN-Milano and shipped to FNAL in July, 2007. The kit included the vacuum vessel and cold mass assemblies. The eight individual 1.3-GHz dressed cavities and super-conducted corrector magnet were produced and tested by Fermilab . The cryomodule was assembled at Fermilab by FNAL personnel. This cryomodule was named Cryomodule 2, or CM2. Now completed, CM2 resides at its final location at the Beam Enclosure in the New Muon Lab (NML) in preparation for the commissioning of that facility

Pipe sizes, end configurations, positions, materials, design pressures and temperatures are specified by DESY. This document demonstrates that the components supplied are suitable for Fermilab's specified pressure and temperature conditions and that code-required quality assurance has been performed.

All piping components described in this document are as specified in the design of the cryomodule as it was supplied from DESY (ZANON, Italy). The final welds, including procedures, weld and welder qualifications, examination, and acceptance tests are not included in this engineering note and are not available. Because of this lack of documentation, the piping note will require a Director's exception. However, calculations will show that all of the components are safe and operated below their respective allowable working pressures.

1.1 Summary discussion about a Director's exception

This piping note requires a Director's exception due to several B31.3 Code and Fermilab ES&H Chapter 5031 violations. In particular Line G, the 2-Phase Helium Supply circuit, is lacking the required documentation such as material certifications, welding procedures, welding qualifications, examination records. Note that this information is included for the other circuits but is not available for Line G. However, the calculations show that these components are safe and well under the allowable working pressure. Due concern about mechanically overloading to the tuner/piezo mechanism in the cryomodule, there is no plan to do an overall pressure test for 2-phase system in NML. A mass spectrometer test and pressure test for Line G with cavity string (without Blade tuners on the Cavities) were successfully performed.

Table – Areas of Exceptions to the Code

Item	Figure	Explanation	How the system is safe
2-phase Helium Pipe (Line G)	Figures 1 & 9	No supporting documents exist (see table A.1.2 APPENDIX A.1)	Calculation show that components are within allowable working pressure.

2. Piping Overview

Figure 1 shows an end view of the cryomodule and identifies the nine different piping assemblies. Table 1 summarizes each system's pipe size, material, and operating conditions as specified by DESY. The labels in Figure 1 are the same as Table 1. Figures 2 and 3 show isometric views of the pipe weldments interior to the cryomodule. Piping drawings, supplied by Desy and INFN are shown in Appendix A.2. Support documents for the piping systems produced by Zanon are located in Appendix A.3. Several DESY production documents are located in Appendix A.4.

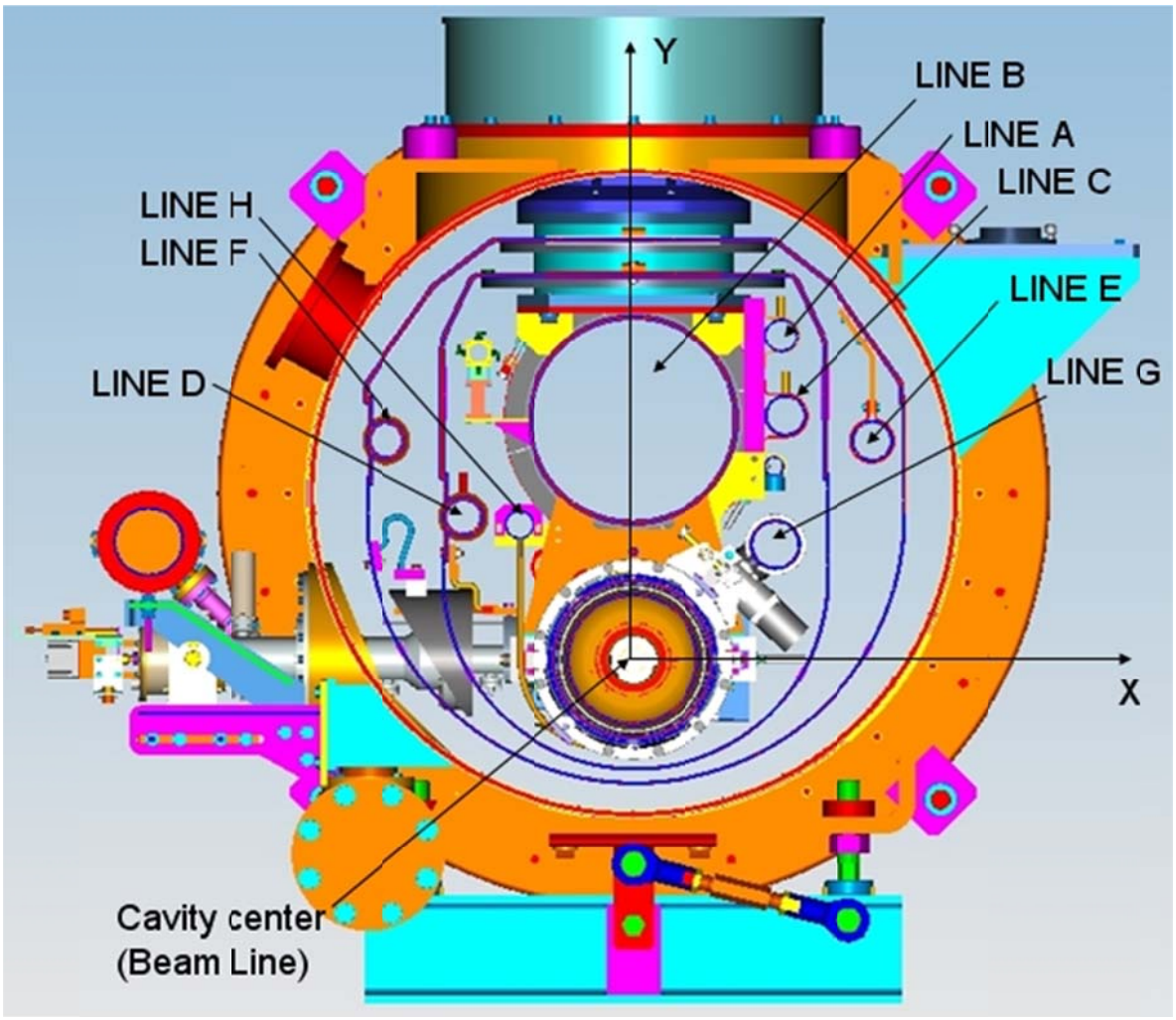

Figure 1 – Cryomodule 1 Section View

Table 1 – Cryomodule 1 Lines Summary

Cryo genic Line	Line Name	Drawing Number	Pipe dimensions, material	Design Pressure	Design Temp.
A	1.8K Helium supply pipe	DESY 1_06_8205 _0_200	48.3 mm-OD, 1.65 mm-Wall pipe, ASTM A312 TP 316L	4 bar	1.8K
B	Helium Gas Return with Compensator	*	312.0 mm-OD, 6.00 mm-Wall pipe, ASTM A240 316L	4 bar	1.8K
C	4.5K Thermal Shield supply	DESY 1_06_8205 _0_200	60.3 mm-OD, 2.76 mm-Wall pipe, ASTM A312 TP 316L	7 bar	4.2K
D	4.5K Thermal Shield return	DESY 0_06_8205 _0_150	60.0 mm-OD, 5.00 mm-Wall pipe, Aluminum 6060 T5	7 bar	4.2K
E	70K Thermal Shield supply	TTF – CRY3-04.01.00	60.3 mm-OD, 2.76 mm-Wall pipe, ASTM A312 TP 316L	18 bar	77K
F	70K Thermal Shield return	DESY 0_06_8205 _0_170	60.0 mm-OD, 5.00 mm-Wall pipe, Aluminum 6060 T5	18 bar	77K
G	2-Phase He Pipe Weld	D858455 D813155	73.02 mm-OD, 2.77mm Wall, bellows, CF100 flange, all titanium, grade 2	4 bar	1.8K
H	Warmup/Cool down	DESY 1_06_8205 _0_210	Tubes: 42.2 mm-OD,1.65mm-Wall; 10.2 mm-OD, 2.6mm-Wall; 5.0 mm-OD, 1.0 mm-Wall ASTM A312 TP316L with CDA15 CF Flange AISI 316L	4 bar	1.8K

* - DESY 0_06_8205_0_110, DESY 2_99_9101/A.000, and Figure 6

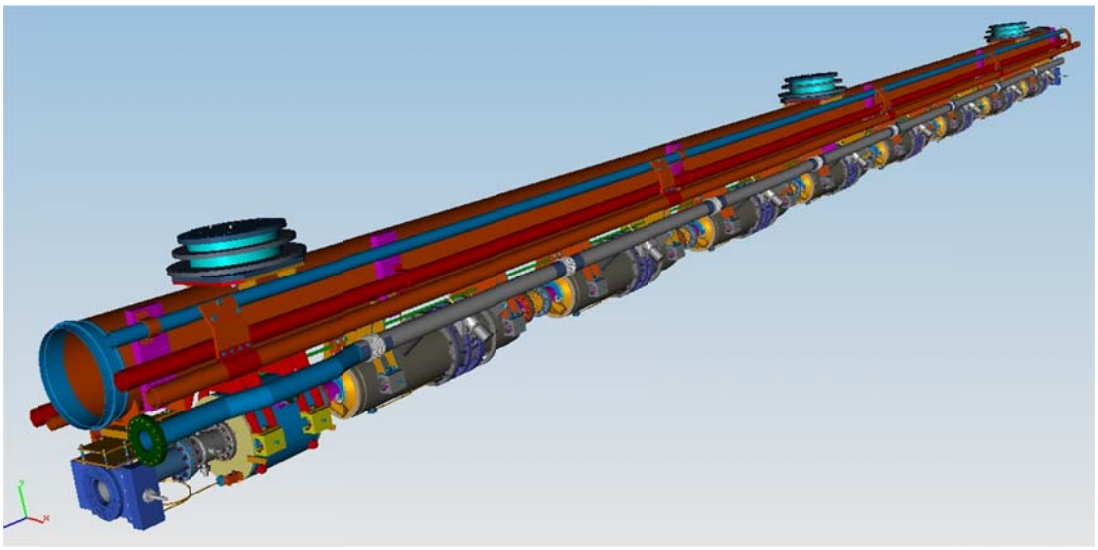

Figure 2 – Pipe weldments interior to the crymodule

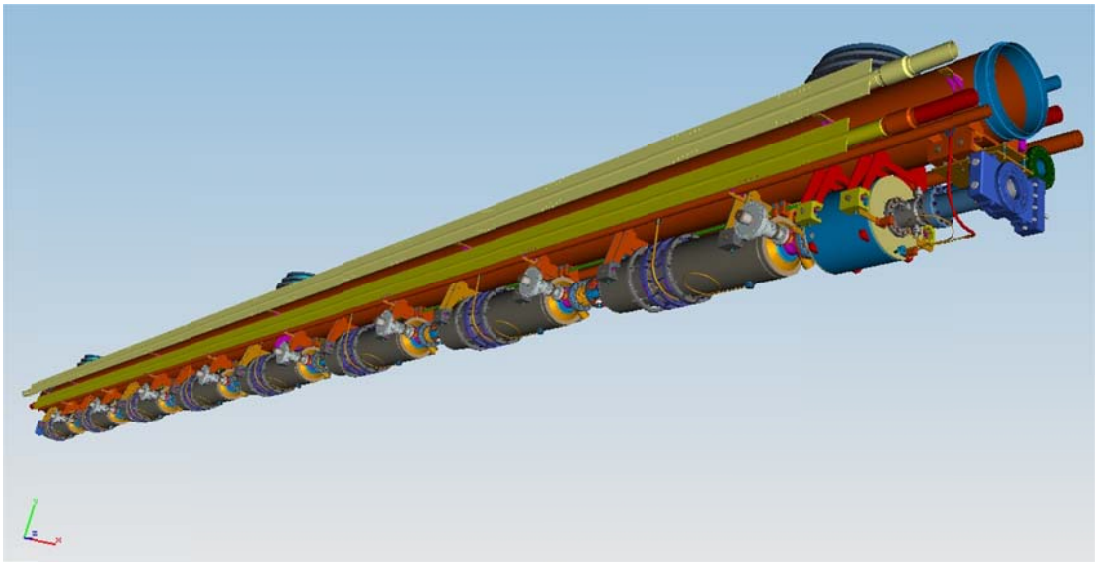

Figure 3 – Pipe weldments interior to the crymodule

All components within the cryomodule fall within the scope of ASME B31.3 Normal fluid service. Piping systems fabricated per B31.3 require verification of weld and welder qualifications, post-fabrication examination, and leak test. Table A.1.2 in Appendix A.1. summarizes the documentation that is appended to the note.

3. Pipeline Details Analyses.

3.1 Cryogenic Line A – 1.8K Helium supply pipe

1.8K Helium supply pipe material: ASTM A312 TP316L, pipe dimension and drawing number see in Table1.
This pipe passes directly through the cryomodule. It is a straight section of pipe. The 1.8K Helium supply pipe is supported by a rigid connection at the middle with several sliding supports at both ends. Bellows are attached at each end as well but are included in the CM-2 interconnect piping note and not analyzed here. For this reason, no thermal stresses result during cool-down.
According **304.1**, Ref. 3 (ASME B31.3-2008) for $t < \frac{D}{6}$,
$t_m^A = t + c = 0.084 + 0.5 = 0.584(mm)$ - the required thickness of pipe.

Where:

c= the sum of the mechanical allowances plus corrosion or erosion allowances, according 304.1.1, Ref. 3: c=0.5(mm) =.02(in)

$$t = t^A = \frac{P * D}{2 * (S * E + P * Y)} = \frac{0.058 * 1.902}{2 * (16.7 * 1 + 0.058 * 0.4)} = 3.3 * 10^{-3}(in) = 0.084(mm),$$

t^A = pressure design Line A pipe thickness.
P= internal design pressure. P=4(bar) = 0.058(Ksi)
D= outer diameter of pipe. D=48.3(mm) =1.902(in)
S= stress value for pipe material, according Tab.A-1, page 158, S= 16.7 (Ksi)
E= quality factor, according Tab. A-1B, page 196, E=1.0
Y= coefficient, according Tab.304.1.1, Y=0.4
$t_n^A = 1.65(mm)$ -thickness of pipe -Line A.
Pr= 81 bar, pressure Rating, according formula Ref. 3 and real pipe wall thickness.
Capacity factor: $\mathrm{Pr}/P = 20$ (satisfactory)

The manufacturer (E.ZENON, Italy) material qualification, weldment and pressure test documents from see in Appendix A1.

Table 2 summarizes the pipe geometry, design pressure, and pressure rating

Table 2

Name	Drawing Number	Description	Design Pressure	Pipe Rating	Capacity factor
1.8K Helium supply pipe	See Tab. 1	48.3 mm-OD, 1.65 mm-Wall pipe, ASTM A312 TP 316L	4 bar	81 bar	20

3.2 Cryogenic Line B - Helium Gas Return Pipe

The Helium Gas Return Pipe material: ASTM A240 316L, pipe dimension and drawing number see in Table1.

According **304.1**, Ref. 3 (ASME B31.3-2004) for $t < \frac{D}{6}$,

$t_m^B = t + c = 0.675 + 0.5 = 1.176(mm)$ - the required thickness of pipe.
Where:

c=0.5(mm) =.02(in)

$$t = t^B = \frac{P * D}{2 * (S * E + P * Y)} = \frac{0.058 * 12.28}{2 * (16.7 * 0.8 + 0.058 * 0.4)} = 26.6 * 10^{-3} in = 0.676 mm,$$

t^B = pressure design Line B pipe thickness.
P=4(bar) = 0.058(Ksi)
D=312(mm) =12.28(in)
S= 16.7 (Ksi), according Tab.A-1, page 158
E= 0.8, according Tab. A-1B, page 192
Y= 0.4, according Tab.304.1.1
$t_n^B = 6.0(mm)$ -thickness of pipe -Line B.
Pr= 36 bar, pressure Rating, according formula Ref. 3 and real pipe wall thickness.
Capacity factor: $\mathrm{Pr}/P = 9.0$ (satisfactory)

In addition to carrying helium boil-off gas, the pipe also serves as the strong back to the cold mass support system. Supports and mounts for 1.3 GHz cavities are welded to the exterior

of the pipe (see Figure 4). The pipe is supported by a rigid connection at the middle and roller bearings and bellows at both ends. For this reason, no thermal stresses result during cool-down. Note that the downstream bellows is part of the CM-2 interconnect piping note and not analyzed here. A hand calculation of the effect of the load of the cavity string, which is supported from this pipe, is included below. Very conservative assumptions are used to simplify the calculation.

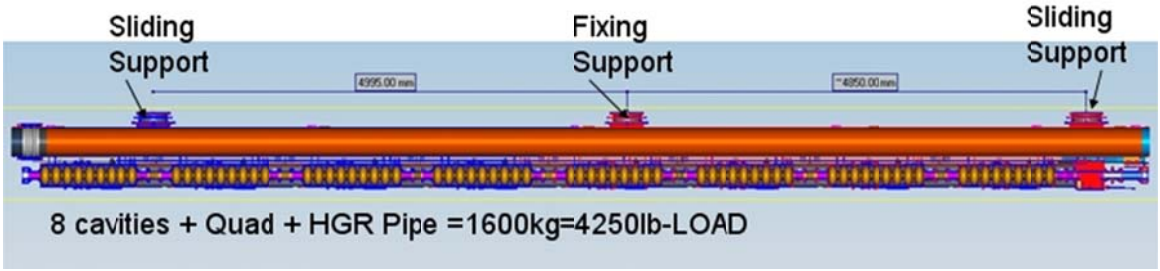

Figure 4 – HGR pipe with Cavity load.

q= uniform Load per HGR pipe, q= 4250/387.6(lb/inch) =10.96(lb/in)

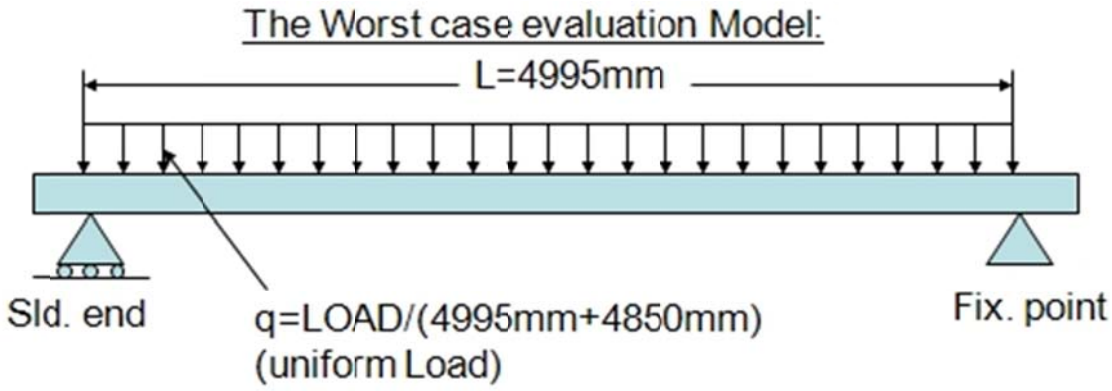

Figure 5 – HGR pipe evaluation model.

According Reference 5, page225 maximum stress:

$$\sigma = -\frac{9}{128} * \frac{W * L}{Z} = -1129.4(psi)$$

Where:
W=load on the beam, W=q*L=10.96*196.6=2155.3(lb)
L= distance between beam supports, L=4995(mm) =196.6(in)
Z=section modulus of the cross-section of beam, $Z = \frac{I}{y} = 0.098 * \frac{D^4 - d^4}{D} = 26.38in^3$, (Reference 5, page 191)
D=pipe OD, D=312 (mm) =12.28(in)
D=pipe ID, d=300(mm) =11.81(in)
Capacity factor: $S/\sigma = 16.7/1.1294 = 14.8$ (satisfactory)

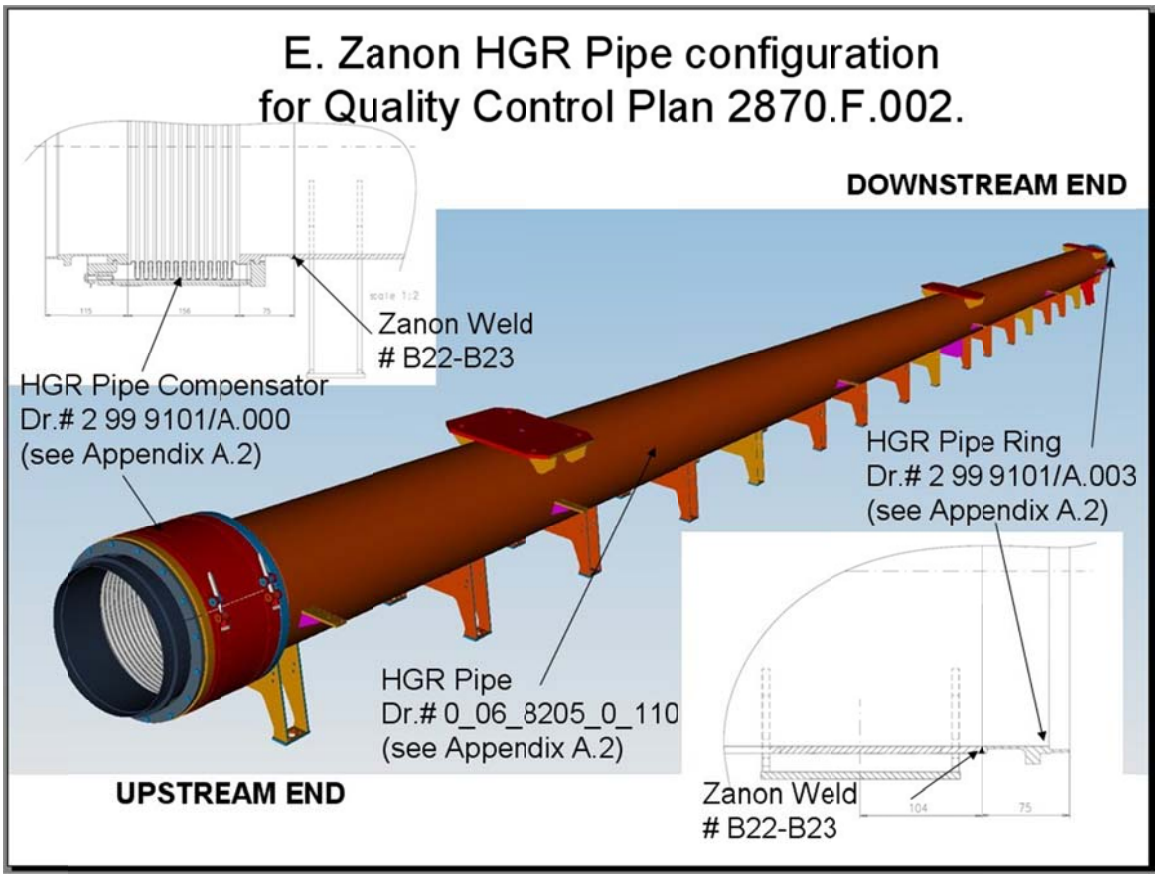

Figure 6 -Helium Gas Return Pipe, according E. Zanon documentation

Compensator He Gas return Pipe and HGR pipe End Ring are welded to each pipe end (see Figure 6). The pipe ends are machined before welding with end flanges. Production and manufacturer pressure test documents are located in Table A.1.2-Appendix A.1 and Appendix A3 & A4.

Table 3 summarizes the pipe geometry, design pressure, and pressure rating.

Table 3

Name	Drawing Number	Description	Design Pressure	Pipe Rating	Capacity Factor
Helium Gas Return Pipe	See Tab. 1	312.0 mm-OD, 6.00 mm-Wall pipe, ASTM A240 316L	4 bar	36 bar	9.0

3.3 Cryogenic Lines C, D, E and F–Thermal Shields 4.5K and 70K

These pipes are connected to the 70K and 4.5K thermal shields. There are two aluminum return pipe extrusions with similar construction: 60.0 mm-OD, 5.00 mm-Wall pipe, Aluminum 6060 T5, joined to 316L stainless steel pipes, 60.3 mm-OD, 2.76mm-wall through a bimetallic coupler. The aluminum pipes are “finger” welded to the aluminum thermal shields, Figure 7 and

8. Therefore, no thermal stress, axial loads result when cold because of the matched coefficient of thermal expansion of the clamped members.

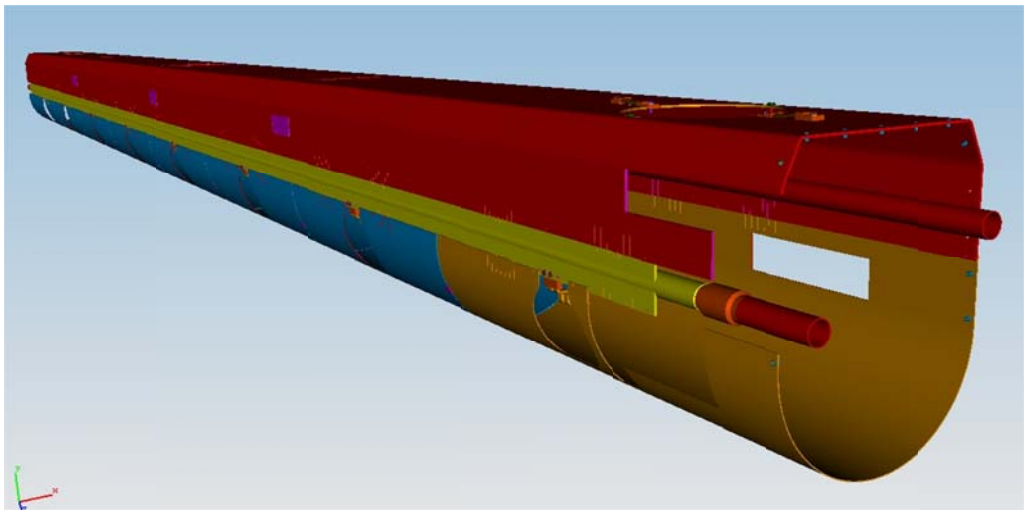

Figure 7 – 4.5K aluminum shield with cryogenic lines E (4.5K supply pipe) and F (4,5K return line, bimetallic coupler).

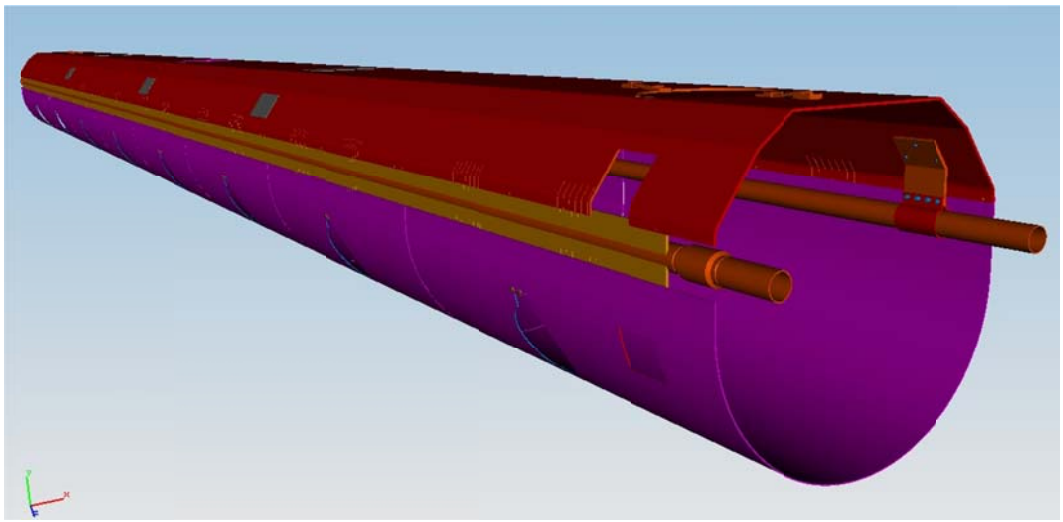

Figure 8 – 70K aluminum shield with cryogenic lines C (70K supply pipe) and D (70K return line, bimetallic coupler).

3.3.1 Cryogenic Line C – 4.5K Thermal Shield supply pipe

4.5K Helium supply pipe material: ASTM A312 TP316L, pipe dimension and drawing number see in Table1 and Figure 6.
This pipe passes directly through the cryomodule. It is a straight section of pipe. The 4.5K Thermal shield supply pipe is supported by a rigid connection in the middle and several sliding supports at each end. Bellows are installed at each end as well but are analyzed in the CM-2 interconnect piping note and not here. For this reason, no thermal stresses result during cool-down.

According **304.1**, Ref. 3 (ASME B31.3-2004) for $t < \frac{D}{6}$,

$t_m^C = t + c = 0.183 + 0.5 = 0.683(mm)$ - the required thickness of pipe.

Where:

c=0.5(mm) =.02(in)

$t = t^C = \frac{P * D}{2 * (S * E + P * Y)} = \frac{0.102 * 2.37}{2 * (16.7 * 1 + 0.102 * 0.4)} = 7.22 * 10^{-3}(in) = 0.183(mm)$,

t^C = pressure design Line C pipe thickness.
P=7(bar) = 0.102(Ksi)
D=60.3(mm) =2.37(in)
S= 16.7 (Ksi), according Tab.A-1, page 158
E=1.0, according Tab. A-1B, page 192
Y= coefficient, according Tab.304.1.1, Y=0.4
$t_n^C = 2.76(mm)$ -thickness of pipe -Line C
Pr= 109 bar, pressure Rating, according formula Ref. 3 and real pipe wall thickness.
Capacity factor: $\Pr / P = 16$ (satisfactory)

3.3.2 Cryogenic Line D – 4.5K Thermal Shield return pipe

4.5K Helium supply pipe material: Aluminum 6060 T5 (the American equivalent: Aluminum 6063 T5), pipe dimension and drawing number see in Table1 and Figure 6. This pipe passes directly through the cryomodule. It is a straight section of pipe.

According **304.1**, Ref. 3 (ASME B31.3-2004) for $t < \frac{D}{6}$,

$t_m^D = t + c = 0.53 + 0.5 = 1.03(mm)$ - the required thickness of pipe.

Where:

c=0.5(mm) =.02(in)

$t = t^D = \frac{P * D}{2 * (S * E + P * Y)} = \frac{0.102 * 2.36}{2 * (5.7 * 1 + 0.102 * 0.4)} = 21 * 10^{-3}(in) = 0.53(mm)$,

t^D = pressure design Line D pipe thickness.
P=7(bar) = 0.102(Ksi)
D=60.0(mm) =2.36(in)
S= 5.7 (Ksi), according Tab.A-1, page 185
E=1.0, according Tab. A-1B, page 193
Y=0.4, according Tab.304.1.1,page 18
$t_n^D = 5.0(mm)$ - thickness of pipe -Line D.
Pr= 70.2 bar, pressure Rating, according formula Ref. 3 and real pipe wall thickness.
Capacity factor: $\Pr / P = 10$ (satisfactory)\

3.3.3 Cryogenic Line E – 70K Thermal Shield supply pipe

70K Helium supply pipe material: ASTM A312 TP316L, pipe dimension and drawing number see in Table1 and Figure 7.
This pipe passes directly through the cryomodule. It is a straight section of pipe. The 70K Thermal shield supply pipe is supported by a rigid connection in the middle with several sliding supports at the each end. As in the other circuits, bellows are attached at each end but are not part of this piping note. For this reason, no thermal stresses result during cool-down.

According **304.**1, Ref. 3 (ASME B31.3-2004) for $t < \frac{D}{6}$,

$t_m^E = t + c = 0.47 + 0.5 = 0.97(mm)$ - the required thickness of pipe.

Where:

c=0.5(mm) =.02(in)

$t = t^E = \frac{P * D}{2 * (S * E + P * Y)} = \frac{0.26 * 2.37}{2 * (16.7 * 1 + 0.26 * 0.4)} = 18.0 * 10^{-3}(in) = 0.47(mm)$,

t^E = pressure design Line E pipe thickness.
P=18(bar) = 0.26(Ksi)
D=60.3(mm) =2.37(in)
S= 16.7 (Ksi), according Tab.A-1, page 158
E=1.0, according Tab. A-1B, page 192
Y=0.4, according Tab.304.1.1,page 18
$t_n^E = 2.76(mm)$ - thickness of pipe -Line E.
Pr= 109 bar, pressure Rating, according formula Ref. 3 and real pipe wall thickness.
Capacity factor: $Pr/P = 6.0$ (satisfactory)

3.3.4 Cryogenic Line F – 70K Thermal Shield return pipe

70K Helium supply pipe material: Aluminum 6060 T5 (the American equivalent: Aluminum 6063 T5), pipe dimension and drawing number see in Table1 and Figure 6.
This pipe passes directly through the cryomodule. It is a straight section of pipe.
According **304.1**, Ref. 3 (ASME B31.3-2004) for $t < \frac{D}{6}$,

$t_m^F = t + c = 1.35 + 0.5 = 1.85(mm)$ - the required thickness of pipe.

Where:

c=0.5(mm) =.02(in)

$t = t^F = \frac{P * D}{2 * (S * E + P * Y)} = \frac{0.26 * 2.37}{2 * (5.7 * 1 + 0.26 * 0.4)} = 53 * 10^{-3} (in) = 1.35(mm)$,

t^F = pressure design Line F pipe thickness.
P=18(bar) = 0.26(Ksi)
D=60.0(mm) =2.36(in)
S= 5.7 (Ksi), according Tab.A-1, page 185
E=1.0, according Tab. A-1B, page 193
Y=0.4, according Tab.304.1.1, page 18
$t_n^F = 5.0(mm)$ - thickness of pipe -Line F.
Pr= 98 bar, pressure Rating, according formula Ref. 3 and real pipe wall thickness.
Capacity factor: $Pr/P = 5.5$ (satisfactory)

Table 4 summarizes the pipes geometry, design pressure, and pressure rating for Lines C, D, E and F.

Table 4

Name	Drawing Number	Description	Design Pressure	Pipe Rating	Capacity Factor
4.5K Thermal Shield supply pipe	See Tab. 1	60.3 mm-OD, 2.76 mm-Wall pipe, ASTM A312 TP 316L	7 bar	109 bar	16
4.5K Thermal Shield return pipe	See Tab. 1	60.0 mm-OD, 5.00 mm-Wall pipe, Aluminum 6065 T5	7 bar	98 bar	14
4.5K Bimetallic Coupler	-	DIA 60.0 x 5 (mm)-Al 5083 DIA 60.3 x 2.76 (mm)-316L	7 bar	75 bar*	10.7
70K Thermal Shield supply pipe	See Tab. 1	60.3 mm-OD, 2.76 mm-Wall pipe, ASTM A312 TP 316L	18 bar	89 bar	4.9
70K Thermal Shield return pipe	See Tab. 1	60.0 mm-OD, 5.00 mm-Wall pipe, Aluminum 6065 T5	18 bar	98 bar	5.5
70K Bimetallic Coupler	-	DIA 60.0 x 5 (mm)-Al 5083 DIA 60.3 x 2.76 (mm)-316L	18 bar	75 bar*	4.2

Production and manufacturer pressure test documents are located in Table A.1.2-Appendix A.1 and Appendix A3 & A4.

* The bimetallic (316L SS and 5083 Aluminum) joint is a commercially purchased item, where 5083 grade aluminum is readily welded to 6060 T5 pipe. The manufacturer drawing is in Appendix A2, pressure test to 75 bar, pressure test certificate is in Appendix A3. Aluminum/stainless steel transition joints are not a Piping Code standard component, but we have extensive operating service experience with them. According to Tom Nicol, Fermilab engineer, couplers fabricated by the same vendor and with the same design (smaller diameter) have successful service experience in the 50-70K shield supply & return lines (operating pressure 19.5 bar) of all LHC magnets at CERN. (Fermilab designed and built LHC IRQ magnets, while the other magnet types, which use the same coupler, are fabricated by others in the collaboration.)

Butt joint weld preparations are as per the code. All weldments passed pneumatic leak test at 110% of design pressure. All supporting records identified in Table 2 are included in the Appendix A.3.

3.4 Cryogenic Line G – 2 Phase pipe

This pipe passes through the cryomodule 1. The 2-Phase pipe has eight straight sections, one for each of the eight cavity helium vessels and multiple welded miter sections for connection to the magnet. For cryomodule 2 a corrector SP magnet is installed which is connected to the 2-Phase pipe. Titanium bellows connect the straight and mitered sections together. The straight sections are thermally connected to each of the eight RF input couplers on the cavity.
Pressure test was performed at FERMILAB for Line G-Cavity String circuit. Document is available in Appendix A.6

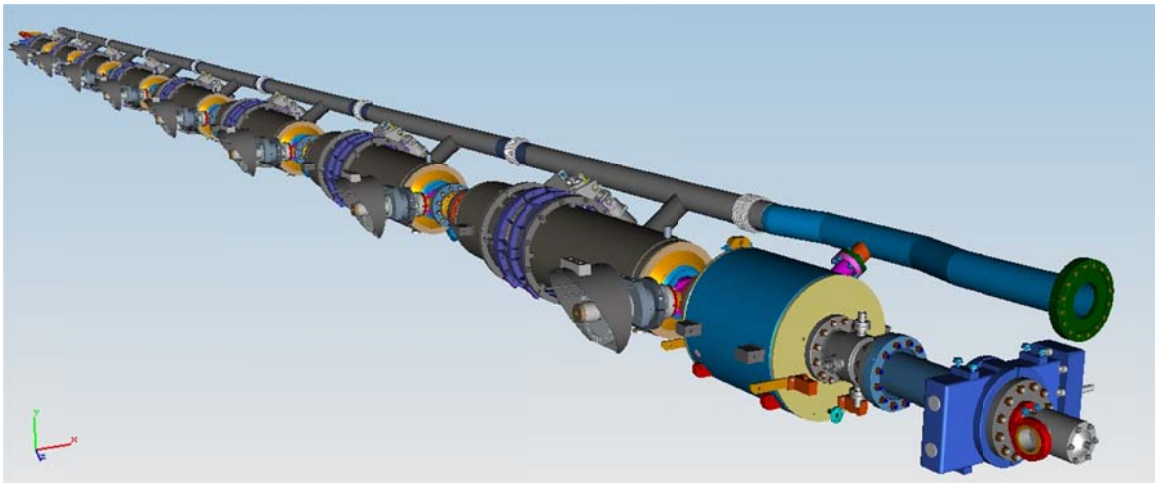

Figure 9– 2-Phase He lines G

2-Phase Helium pipe material: Titanium Gr.2, pipe dimension and drawing number are in Table1 and Figure 8. Titanium piping is specified here because it is welded to the titanium helium vessel that surrounds the RF cavity. Titanium is used there because its thermal expansion characteristics match well with the niobium of the cavity and niobium and titanium are readily welded to each other.

3.4.1 (Cavity He Vessel) 2-Phase He Pipe

That is a straight section of pipe.

According **304.1**, Ref. 3 (ASME B31.3-2004) for $t < \frac{D}{6}$,

$t_m^{G1} = t + c = 0.149 + 0.5 = 0.649(mm)$ - the required thickness of pipe (for pipe 2.875"x .079" or 73.025 x 2.875 mm).

Where:

c=0.5(mm) =.02(in)

$$t = t^{G1} = \frac{P * D}{2 * (S * E + P * Y)} = \frac{0.058 * 2.875}{2 * (16.7 * 0.85 + 0.058 * 0.4)} = 6.0 * 10^{-3} (in) = 0.149 (mm),$$

t^{G1} = pressure design Line E straight pipe thickness.
P=4(bar) = 0.058(Ksi)
D=73.025(mm) =2.875(in)
S= 16.7 (Ksi), according Tab.A-1, page 182
E=0.85, according Tab. A-1B, page 193
Y=0.4, according Tab.304.1.1, page 18
$t_n^G = 2.875 (mm)$ - thickness of pipe -Line G
Pr= 55.2 bar, pressure Rating, according formula Ref. 3 and real pipe wall thickness.
Capacity factor: $\mathrm{Pr}/P = 13.8$ (satisfactory)

$t_m^{G1} = t + c = 0.123 + 0.5 = 0.623 (mm)$ - the required thickness of branch (nozzle) pipe (2.375" x 0.109" or 60.325 x 2.77mm).

Where:

c=0.5(mm) =.02(in)

$$t = t^{G1} = \frac{P * D}{2 * (S * E + P * Y)} = \frac{0.058 * 2.375}{2 * (16.7 * 0.85 + 0.058 * 0.4)} = 4.85 * 10^{-3} (in) = 0.123 (mm),$$

t^{G1} = pressure design Line E straight pipe thickness.
P=4(bar) = 0.058(Ksi)
D=60.325(mm) =2.375(in)
S= 16.7 (Ksi), according Tab.A-1, page 182
E=0.85, according Tab. A-1B, page 193
Y=0.4, according Tab.304.1.1, page 18
$t_n^G = 2.77 (mm)$ - thickness of pipe -Line G
Pr= 93.3 bar, pressure Rating, according formula Ref. 3 and real pipe wall thickness.
Capacity factor: $\mathrm{Pr}/P = 23.3$ (satisfactory)

According **304.3**, Ref. 3 (ASME B31.3-2004) reinforcement of welded branch connection under internal pressure:

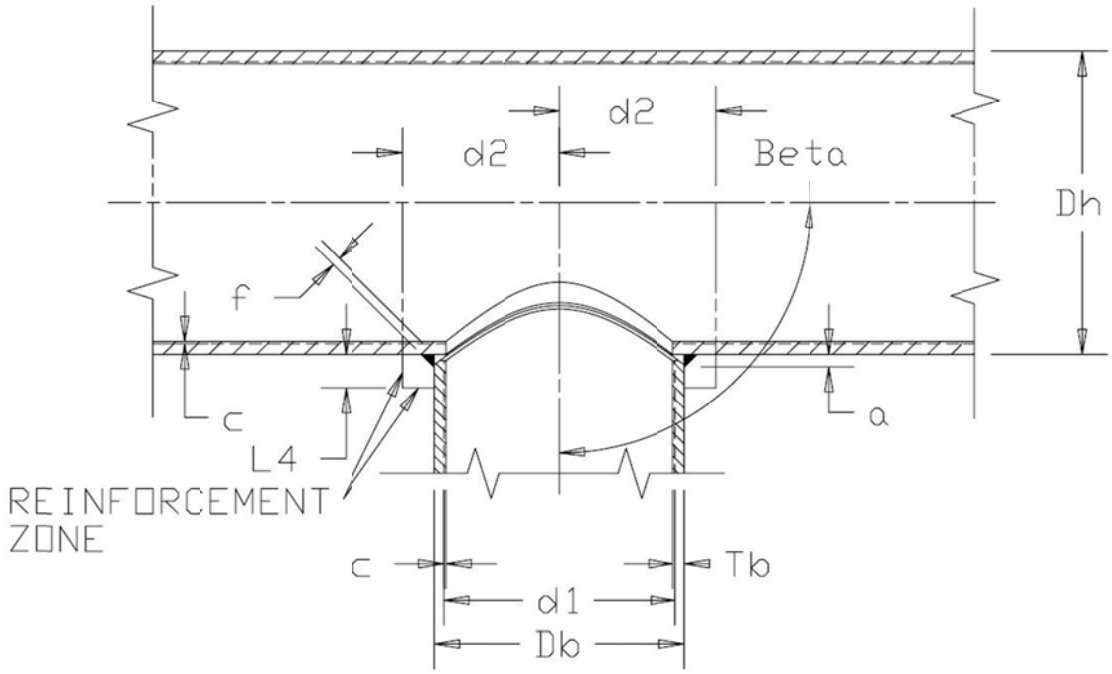

Figure 11 – Pipe Brunch connection symbols

$A_1 = t_h * d_1 * (2 - \sin\beta) = .0129(in\text{^}2) = 8.39(mm\text{^}2)$ -required reinforcement Area

Where:

$t_h = .006(in) = 0.149(mm)$ -required wall thickness of run pipe
$d_1 = 2.196(in) = 55.8(mm)$ -effective length removed from pipe at branch
$\beta = 90\deg(Beta)$ -smaller angle between axes of branch and run

$A_2 = (2 * d_2 - d_1) * (T_h - t_h - c) = .016(in\text{^}2) = 10.3(mm\text{^}2)$ -the Area resulting from excess thickness in the run pipe wall

Where:

$d_2 = 1.098(in) = 27.9(mm)$ -"half width" of reinforcement zone, or
$d_2 = (T_b - c) + (T_h - c) + d_1 / 2 = 1.247(in) = 31.75(mm)$, take greater.

$T_h = .079(in) = 2.0(mm)$ -wall thickness of run pipe
$c = 0.0197(in) = 0.5(mm)$ -sum of mechanical allowances plus corrosion and erosion allowances

$A_3 = 2 * L_4 * (T_b - t_b - c) / \sin\beta = .0251(in\text{^}2) = 16.9(mm\text{^}2)$ -the Area resulting from excess thickness in the branch pipe wall

Where:

$L_4 = 2.5*(T_h - c) = .1489(in) = 3.78(mm)$ -height of reinforcement zone, or
$L_4 = 2.5*(T_h - c) + T_r = .1489(in) = 3.78(mm)$ - take smaller. (Tr=0, min thickness of reinforcement ring)
$T_b = .109(in) = 2.77(mm)$ -wall thickness of branch pipe
$t_b = 0.0048(in) = 0.123(mm)$ - required wall thickness of branch pipe

$A_4 = 2*a^2/2 = .0139(in\text{^}2) = 8.97(mm\text{^}2)$ -the Area resulting from excess thickness in the branch pipe wall

Where:

$a = .119(in) = 3.0(mm)$ -welding size (parameter)
$A_2 + A_3 + A_4 = .0520(in\text{^}2) = 33.5(mm\text{^}2)$ -available Area is more than required, so that no additional reinforcement is required.

3.4.2 (Quad He Vessel) 2-Phase He Pipe

That is a multiple miter bends weldment section of pipe.
According **304.2**, Ref. 3 (ASME B31.3-2004), maximum allowable internal pressure for miter bends:

$$P_m = \frac{S*E*W*(T-c)}{r_2} * \left(\frac{T-c}{(T-c) + 0.643*\tan\Theta*\sqrt{r_2*(T-c)}} \right) =$$

$$\frac{16700*0.85*1.0*(0.079-0.02)}{1.38} * \left(\frac{(0.079-0.02)}{(0.079-0.02) + 0.643*\tan 7.5^\circ * \sqrt{1.46*(0.079-0.02)}} \right) =$$

$428.8(psi) = 29.6(bar)$

Where:
c= the sum of the mechanical allowances plus corrosion or erosion allowances,
c=0.5(mm) =.02(in)
E=0.85, according Tab. A-1B, page 193
r_2 = means radius of pipe using nominal wall T, r_2 =D/2-T/2=35.05(mm)=1.38(in)
S= 16.7 (Ksi), according Tab.A-1, page 182
T= miter pipe wall thickness, T=2.01(mm)=0.079(in)
W= weld joint strength reduction factor, W=1.0, paragraph 302.3.5(e), page17
α = angle of change in direction at miter join, $\alpha = 2\Theta = 15^\circ$
Θ = angle of miter cut, $\Theta = 7.5^\circ$

Capacity factor: $P_m / P = 7.4$ (satisfactory)

According **304.3**, Ref. 3 (ASME B31.3-2004) reinforcement of welded branch connection under internal pressure (see Figure 10):

$A_1 = t_h * d_1 * (2 - \sin\beta) = .009(in\text{^}2) = 5.8(mm\text{^}2)$ -required reinforcement Area

Where:

$t_h = .006(in) = 0.149(mm)$ -required wall thickness of run pipe
$d_1 = 1.481(in) = 37.6(mm)$ -effective length removed from pipe at branch
$\beta = 90\deg(Beta)$ -smaller angle between axes of branch and run

$A_2 = (2 * d_2 - d_1) * (T_h - t_h - c) = .0159(in\text{^}2) = 10.25(mm\text{^}2)$ -the Area resulting from excess thickness in the run pipe wall

Where:

$d_2 = .741(in) = 18.82(mm)$ -"half width" of reinforcement zone, or
$d_2 = (T_b - c) + (T_h - c) + d_1 / 2 = .889(in) = 22.58(mm)$, take greater.

$T_h = .079(in) = 2.0(mm)$ -wall thickness of run pipe
$c = 0.0197(in) = 0.5(mm)$ -sum of mechanical allowances plus corrosion and erosion allowances

$A_3 = 2 * L_4 * (T_b - t_b - c) / \sin\beta = .0255(in\text{^}2) = 16.45(mm\text{^}2)$ -the Area resulting from excess thickness in the branch pipe wall

Where:

$L_4 = 2.5 * (T_h - c) = .1489(in) = 3.78(mm)$ -height of reinforcement zone, or
$L_4 = 2.5 * (T_h - c) + T_r = .1489(in) = 3.78(mm)$ - take smaller. (Tr=0, min thickness of reinforcement ring)
$T_b = .109(in) = 2.77(mm)$ -wall thickness of branch pipe
$t_b = 0.0048(in) = 0.123(mm)$ - required wall thickness of branch pipe

$A_4 = 2 * a^2 / 2 = .00223(in\text{^}2) = 1.44(mm\text{^}2)$ -the Area resulting from excess thickness in the branch pipe wall

Where:

$a = .119(in) = 3.0(mm)$ -welding size (parameter)
$A_2 + A_3 + A_4 = .0368(in\text{^}2) = 23.74(mm\text{^}2)$ -available Area is more than required, so that no additional reinforcement is required.

Table 5 summarizes the pipes geometry, design pressure, and pressure rating for Lines G.

Table 5

Name	Drawing Number	Description	Design Pressure	Pipe Rating	Capacity factor
2-Phase He pipe (Run)	See Tab.1	73.025 mm-OD, 2.0 mm Wall, Titanium, GR 2	4 bar	55 bar	13
2-Phase He pipe (branch)	See Tab.1	60.3 mm-OD, 2.8 mm Wall, Titanium, GR 2	4 bar	93 bar	23
2-Phase He pipe (Run) corrector	See Tab.1	73.025 mm-OD, 2.0 mm Wall, Titanium, GR 2	4 bar	29.6 bar	7.4
2-Phase He pipe (branch) corrector	See Tab.1	42.164 mm-OD, 2.768 mm Wall, Titanium, GR 2	4 bar	130	33

3.4.3 2-Phase He Pipe Bellow

There are a total of eight titanium pipe bellows on the 2-Phase helium circuit. One, D874615 located between each cavity and one, D858465 located between last cavity and corrector magnet. The vendor (Ameriflex ,INC) bellows calculation is below.

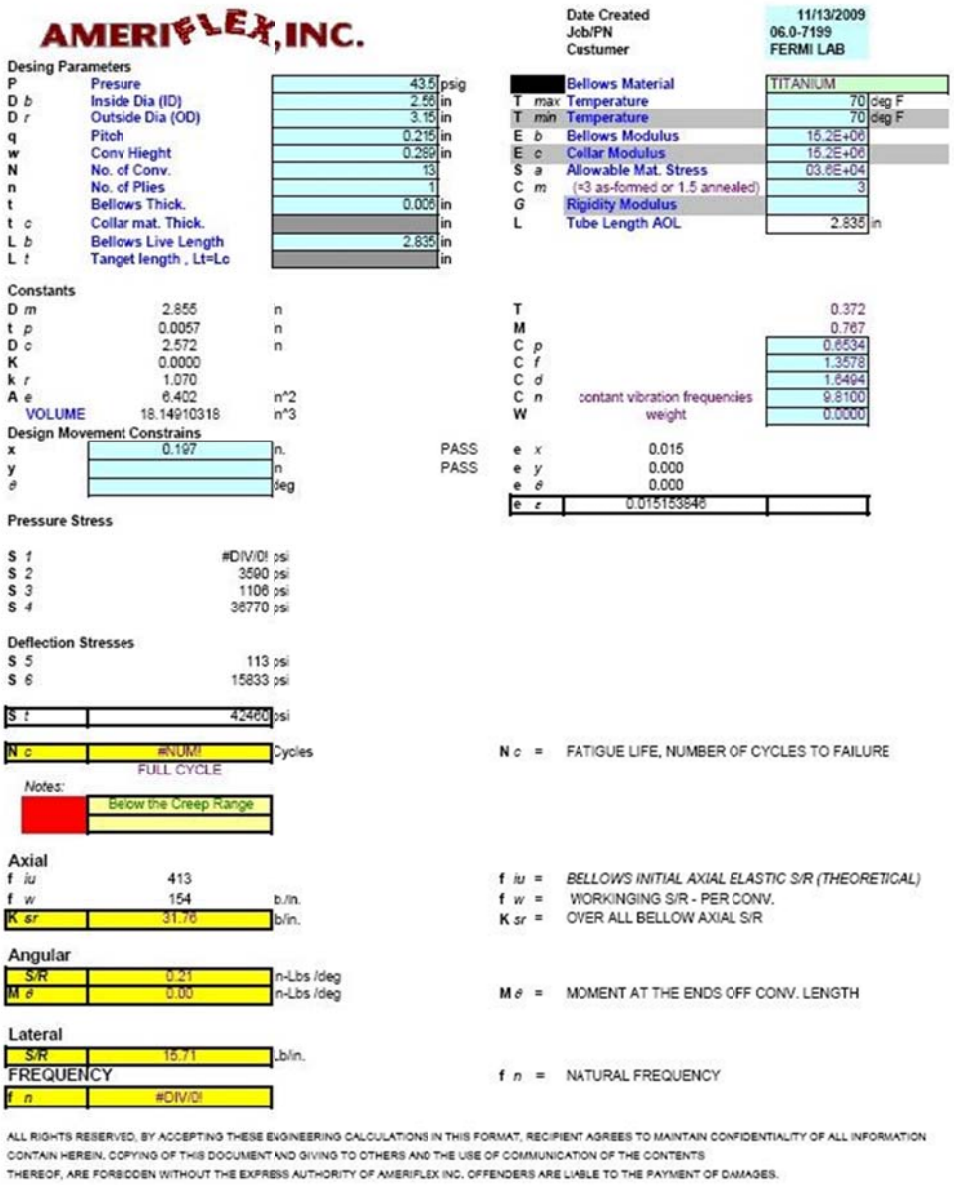

AMERIFLEX, INC.

Date Created	11/13/2009		
Job/PN	06.0-7199		
Custumer	FERMI LAB		

Desing Parameters

P	Presure	43.5	psig		Bellows Material	TITANIUM	
D b	Inside Dia (ID)	2.56	in	T max	Temperature	70	deg F
D r	Outside Dia (OD)	3.15	in	T min	Temperature	70	deg F
q	Pitch	0.215	in	E b	Bellows Modulus	15.2E+06	
w	Conv Hieght	0.289	in	E c	Collar Modulus	15.2E+06	
N	No. of Conv.	13		S a	Allowable Mat. Stress	03.6E+04	
n	No. of Plies	1		C m	(=3 as-formed or 1.5 annealed)	3	
t	Bellows Thick.	0.006	in	G	Rigidity Modulus		
t c	Collar mat. Thick.		in	L	Tube Length AOL	2.835	in
L b	Bellows Live Length	2.835	in				
L t	Tanget length , Lt=Lc		in				

Constants

D m	2.855	n		T		0.372
t p	0.0057	n		M		0.767
D c	2.572	n		C p		0.6534
K	0.0000			C f		1.3578
k r	1.070			C d		1.6494
A e	6.402	n^2		C n	contant vibration frequencies	9.8100
VOLUME	18.14910318	n^3		W	weight	0.0000

Design Movement Constrains

x	0.197	n.	PASS	e x	0.015	
y		n	PASS	e y	0.000	
e		deg		e e	0.000	
				e z	0.015153848	

Pressure Stress

S 1	#DIV/0!	psi
S 2	3590	psi
S 3	1106	psi
S 4	36770	psi

Deflection Stresses

S 5	113	psi
S 6	15833	psi
S t	42460	psi

N c	#NUM!	Cycles	N c = FATIGUE LIFE, NUMBER OF CYCLES TO FAILURE
	FULL CYCLE		

Notes:

Below the Creep Range

Axial

f iu	413		f iu = BELLOWS INITIAL AXIAL ELASTIC S/R (THEORETICAL)
f w	154	b./in.	f w = WORKINGING S/R - PER CONV.
K sr	31.76	b/in.	K sr = OVER ALL BELLOW AXIAL S/R

Angular

S/R	0.21	n-Lbs /deg	
M e	0.00	n-Lbs /deg	M e = MOMENT AT THE ENDS OFF CONV. LENGTH

Lateral

S/R	15.71	.b/in.	

FREQUENCY

f n	#DIV/0!	f n = NATURAL FREQUENCY

ALL RIGHTS RESERVED, BY ACCEPTING THESE ENGINEERING CALCULATIONS IN THIS FORMAT, RECIPIENT AGREES TO MAINTAIN CONFIDENTIALITY OF ALL INFORMATION CONTAIN HEREIN. COPYING OF THIS DOCUMENT AND GIVING TO OTHERS AND THE USE OF COMMUNICATION OF THE CONTENTS THEREOF, ARE FORBODEN WITHOUT THE EXPRESS AUTHORITY OF AMERIFLEX INC. OFFENDERS ARE LIABLE TO THE PAYMENT OF DAMAGES.

Where: the internal pressure is 3 Bar (43.5 psig) at room temperature.

3.5 Cryogenic Line H– Warmup/Cooldown

Line H is a 42.5 mm OD, 1.65 mm-wall pipe connected to the bottom of each helium vessel by a small capillary tube. It is used for filling and draining liquid helium to and from the helium vessels. The weldment includes both 10.2 mm-OD, 2.6 mm wall, 5.0 mm-OD, 1.0mm-wall pipe and CDA A15 CF Flange. The pipe material is ASTM A312 TP 316L. The Flange Material is AISI 316L. The pressure rating in Table 7 below is for the thinner wall. The Pipe Rating in Table 7 is calculated using Ref. 3 per paragraph 304.1.

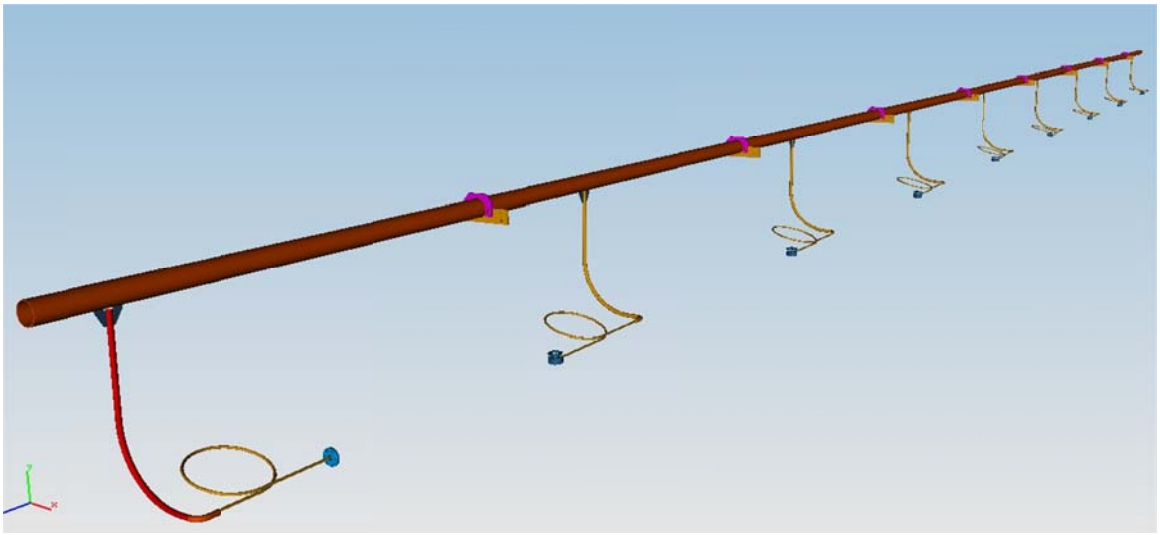

Figure 11 - He Vessel Warmup/Cooldown Line

$t_m^H = t + c = 0.073 + 0.5 = 0.573(mm)$ - the required thickness of pipe.

Where:

c=0.5(mm) =.02(in)

$t = t^E = \frac{P * D}{2 * (S * E + P * Y)} = \frac{0.058 * 1.67}{2 * (16.7 * 1 + 0.058 * 0.4)} = 2.89 * 10^{-3}(in) = 0.073(mm)$,

t^H = pressure design Line E pipe thickness.
P=4(bar) = 0.058(Ksi)
D=42.4(mm) =1.67(in)
S= 16.7 (Ksi), according Tab.A-1, page 158
E=1.0, according Tab. A-1B, page 192
Y=0.4, according Tab.304.1.1,page 18
$t_n^H = 1.65(mm)$ =cryogenic line E pipe thickness.
Pr= 64bar, pressure Rating, according formula Ref. 3 and real pipe wall thickness.
Capacity factor: $\mathrm{Pr}/P = 16$ (satisfactory)

Production and manufacturer pressure test documents are located in Table A.1.2-Appendix A.1 and Appendix A.5.

Table 6 summarizes the pipes geometry, design pressure, and pressure rating for Line H.

Table 6

Name	Drawing Number	Description	Design Pressure	Pipe Rating	Capacity factor
Warmup/ Cooldown pipe	See Tab.1	Tubes, 42.2 mm-OD, 1.65mm-Wall; ASTM A240 316L	4 bar	93 bar	23
		Tubes, 10.2 mm-OD,2.6mm-Wall; ASTM A240 316L	4 bar	737 bar	184
		Tubes, 5.0 mm-OD, 1.0mm-Wall; ASTM A240 316L	4 bar	548 bar	137

According **304.3**, Ref. 3 (ASME B31.3-2004) reinforcement of welded branch connection Warmup/Cooldown pipe under internal pressure:

$A_1 = t_h * d_1 * (2 - \sin\beta) = .0008(in\text{^}2) = 0.52(mm\text{^}2)$ -required reinforcement Area

Where:

$t_h = .003(in) = 0.076(mm)$ -required wall thickness of run pipe
$d_1 = .264(in) = 6.705(mm)$ -effective length removed from pipe at branch
$\beta = 90\deg(Beta)$ -smaller angle between axes of branch and run

$A_2 = (2 * d_2 - d_1) * (T_h - t_h - c) = .0108(in\text{^}2) = 6.97(mm\text{^}2)$ -the Area resulting from excess thickness in the run pipe wall

Where:

$d_2 = .132(in) = 3.353(mm)$ -"half width" of reinforcement zone, or
$d_2 = (T_b - c) + (T_h - c) + d_1 / 2 = .26(in) = 6.604(mm)$, take greater.

$T_h = .065(in) = 1.651(mm)$ -wall thickness of run pipe
$c = 0.0197(in) = 0.5(mm)$ -sum of mechanical allowances plus corrosion and erosion allowances

$A_3 = 2 * L_4 * (T_b - t_b - c) / \sin\beta = .0208(in\text{^}2) = 13.42(mm\text{^}2)$ -the Area resulting from excess thickness in the branch pipe wall

Where:

$L_4 = 2.5 * (T_h - c) = .1132(in) = 2.87(mm)$ -height of reinforcement zone, or
$L_4 = 2.5 * (T_h - c) + T_r = .1132(in) = 2.87(mm)$ - take smaller. (Tr=0, min thickness of reinforcement ring)

$T_b = .102(in) = 2.59(mm)$ -wall thickness of branch pipe
$t_b = .001(in) = 0.025(mm)$ - required wall thickness of branch pipe

$A_4 = 2 * a^2 / 2 = .0022(in\text{^}2) = 1.42(mm\text{^}2)$ -the Area resulting from excess thickness in the branch pipe wall

Where:

$a = .0472(in) = 1.2(mm)$ -welding size (parameter)
$A_2 + A_3 + A_4 = .0238(in\text{^}2) = 15.3(mm\text{^}2)$ -available Area is more than required, so that no additional reinforcement is required.

4. Material properties

Toughness
In general, yield and ultimate strength of metals increase as their temperature is decreased. So it is adequate to use the room temperature allowable stresses published in the code. But some materials are prone to embrittlement as they are cooled so material properties must be reviewed when designing cryogenic systems. The sections below address this issue for the three metals used in the piping system.

Stainless Steel
The minimum design temperature for the 316 stainless steel pipes in the cryomodule is 1.8K, while the minimum shown in B31.3 Table A-1 is 19K. Per B31.3 Table 323.2.2, impact testing is required on the base metal and weld deposit because the pipe is austenitic stainless steel, design temperature <169K (Table 323.2.2, note 3), and material thickness is > .098in (Table 323.2.2, note 6). Because the design stresses are very low, impact tests were not done and reference ASME Boiler and Pressure Vessel code for this exception. ASME BPV Code, Section VIII, Division 1, UHA-51(g) exempts 316/316L and other high alloy steels from impact testing when the coincident ratio of design stress in tension to allowable tensile stress is less than 0.35 regardless of minimum design metal temperature. The BPV code recognizes that brittle failure risk is mitigated with low stresses. In our design, the operating pressure is so low that the ratio of the stress in service to the allowable is 0.22. For this reason, we did not perform impact tests.

Aluminum
For 6060 T5 (the American equivalent-Aluminum 6063 T5): aluminum pipe, the minimum temperature in Table 1 is 4K. The aluminum pipe systems within the cryomodule operate at or above this temperature. Table 323.2.2 in ASME B31.3 indicates that no toughness testing is required.

Titanium
Design temperature of the titanium pipe is 1.8K, while the minimum shown in B31.3 Table A-1 is -75F/214K. Because the design temperature is lower than the value listed in Table A-1, B31.3

requires that the material be tested to prove it is suitable for the lower temperature application. Per B31.3 Table 323.2.2, "Designer shall be assured by suitable tests that base metal, weld deposits, and HAZ are suitable at the design minimum temperature. Tests may include tensile elongation, sharp-notch tensile strength (to be compared to unnotched tensile strength), and/or other tests conducted at or below design minimum temperature." The code does not specify the extent of the testing nor the acceptance criteria.

There are many decades of cumulative operating experience at multiple HEP laboratories, both domestic and foreign, that support the appropriateness of use of titanium at 4K and below. Additionally, we reference three papers in which tensile and toughness tests on titanium quantify the material's cryogenic properties. All papers verify the appropriateness of using titanium in cryogenic pressure systems (ref.6, 7&8).

5. Pipeline Volumes and Thermal Motions

The volume of each individual pipeline is summarized in Table7. The estimated thermal contraction of the ends of each pipe is summarized in Table 8.

Table 7 - Pipeline parameters.

Cryogenic Line	Name	Drawing Number	X, mm	Y, mm	Z, mm (upstr.)	Z, mm (downstr.)	Volume, m^3
A	1.8K Helium supply pipe	DESY 1_06_8205_0_200	219	481.5	6400	5500	0.019
B	Helium Gas Return	DESY 1_06_8205_0_110	0.0	356	6125	5430	0.817
C	4.5K Thermal Shield supply	DESY 1_06_8205_0_200	225.5	362.5	6400	5500	0.028
D	4.5K Thermal Shield return	DESY 1_06_8205_0_150	-252	210	6400	5500	0.023
E	70K Thermal Shield supply	TTF –CRY3-04.01.00	355	325	6400	5500	0.028
F	70K Thermal Shield return	DESY 1_06_8205_0_170	-367	326	6400	5500	0.023
G	2-Phase He (straight and Quad)	D813155 D838455	210.6	170.5	6344	5455	0.044*
H	Warmup/Cool down	DESY 1_06_8205_0_210	-170	200	6400	5500	0.014

* The volume of the 2-phase lines is only the pipeline. It does not include the volume in the helium vessels around each cavity.

Table 8 - Axial motion of pipeline ends at cooldown

Cryogenic Line	Name	Drawing Number	Contraction, ΔL [mm]		Design Temp.
			Upstream End	Downstr. End	
A	1.8K Helium supply pipe	See Tab.1	-19.17	-16.47	1.8K
B	Helium Gas Return	See Tab.1	-18.34	-16.26	1.8K
C	4.5K Thermal Shield supply	See Tab.1	-19.01	-16.34	4.5K
D	4.5K Thermal Shield return	See Tab.1	-28.11	-24.16	4.5K
E	70K Thermal Shield supply	See Tab.1	-14.22	-12.22	77K
F	70K Thermal Shield return	See Tab.1	-20.22	-17.38	77K
G	2-Phase He (straight and Quad)	See Tab.1	-3.33	-2.86	1.8K
H	Warmup/Cool down	See Tab.1	-19.17	-16.47	1.8K

The negative sign in the table is relative to the vector normal to each end of pipe. That is, all pipe ends draw in towards the cryomodule with cool down such that the bellows **between adjacent cryomodules will stretch.**

Cryomodule 2 Piping Engineering Note Appendix

APPENDIX A.1 Pipe Summary

Table A.1.1 Pipe Summary

Item No.	Name	Dwg No.	Description	Design Pressure		Pipe Rating*		Design Temp.	min.T	Outer Diam.	Inner Diam.	thickness	Allow. Stress, S**		Design Stress	S_des / S_all
				[psi]	[bar]	[psi]	[bar]			OD [mm.]	ID [mm.]	t [mm.]	[psi]	[MPa]	[psi]	
A	1.8K Helium supply pipe	DESY 10682050200	weldment	58	4.0			1.8 K								
			48.3 mm-OD, 1.65 mm-Wall pipe, ASTM A312 316L			1173	81		19 K**	48.3	45.0	1.650	16700	115.2	826	0.05
B	Helium Gas Return with Compensator	Figure 6, DESY 00682050110	weldment	58	4.0			1.8 K								
			312.0 mm-OD, 6.00 mm-Wall pipe, ASTM A240 TP 316L			522	36		19 K**	312.0	300.0	6.000	16700	115.2	1856	0.11
		DESY 2999101/A.000	bellows, 1.4541 DIN 17440, hydroformed			n/a	n/a		19 K**	370.0	318.0	n/a	16700	115.2	n/a	n/a
C	4.5K Thermal Shield supply Pipe	DESY 10682050200	weldment	102	7			4.2 K								
			60.3 mm-OD, 2.76 mm-Wall pipe, ASTM A312 316L			1587	109		19 K**	60.3	54.8	2.760	16700	115.2	1068	0.06
D	4.5K Thermal Shield return Pipe	DESY 10682050150	weldment	102	7			4.2 K								
			60.0 mm-OD, 5.00 mm-Wall pipe, Aluminum 6060 T5			1018	70		4K**	60.0	50.0	5.000	5700	39.3	589	0.10
		№ 306-25(attachment)	Bimetallic transition coupler, Al-St.Steel transition			1088	75			n/a	n/a	n/a	n/a			
E	70K Thermal Shield supply Pipe	TTF-CRY3-04.01.00	weldment	261	18			77 K								
			60.3 mm-OD, 2.76 mm-Wall pipe, ASTM A312 316L			1587	109		19 K**	60.3	54.8	2.760	16700	115.2	2747	0.16
F	70K Thermal Shield return Pipe	DESY 00682050170	weldment	261	18			77 K								
			60.0 mm-OD, 5.00 mm-Wall pipe, Aluminum 6060 T5			1018	70		4K**	60.0	50.0	5.000	5700	39.3	1462	0.26
		№ 306-25(attachment)	Bimetallic transition coupler, Al-St.Steel transition			1088	75			n/a	n/a	n/a	n/a			
G	2-Phase He Pipe Weld	D813155	weldment	58	4			1.8 K								
		(straight section)	73.02 mm-OD, 2.0 mm Wall pipe, Ti, grade 2			800	55		214K**	73.0	69.0	2.013	16700	115.2	1211	0.07
		(tranch section)	60.3 mm-OD, 2.7 mm Wall pipe, Ti, grade 2			1353	93		214K**	60.3	54.8	2.769	16700	115.2	716	0.04
		D858455						1.8 K								
		(niter bend section)	73.02 mm-OD, 2.0 mm Wall pipe, Ti, grade 2	58	4	772	30		214K**	73.0	69.0	2.013	16700	115.2	429	0.03
		(tranch section)	42.16 mm-OD, 2.77 mm Wall pipe, Ti, grade 2	58	4	1898	131		214K**	42.2	36.6	2.769	16700	115.2	510	0.03
		D858485	bellows, Ti grade 2, .006" mm thick, hydroformed	44	3				77K***(-321F)	80.0	65.0	0.152	24511***	169.0		
		D874615	bellows, Ti grade 2, .006" mm thick, hydroformed	44	3			1.8 K	77K***(-321F)	80.0	65.0	0.152	24511***	169.0		
H	Warmup/Cooldown Line	DESY 10682050210	weldment	58	4.0			1.8 K								
			42.2 mm-OD, 1.65 mm-Wall tube, ASTM A312 316L			1348	93		19 K**	42.2	38.9	1.650	16700	115.2	719	0.04
			10.2 mm-OD, 2.6 mm-Wall tube, ASTM A312 316L			10695	737		19 K**	10.2	5.0	2.600	16700	115.2	91	0.01
			5.0 mm-OD, 1.0 mm-Wall tube, ASTM A312 316L			7952	548		19 K**	5.0	3.0	1	16700	115.2	122	0.01

* Calculated using eqn.3a in para.304.1.1. Assumes all pipe single welded, E=0.8 and W=1
** from Table A-1, B31.3
*** from reference 6

Table A.1.2 CM2 piping production and test documents.

Pipe Line	Supplier	Material	Meterial Certificate	WPS	PQR	Welds exam.	Pressure test	Leak test
Line A, 1.8K Helium supply pipe	E.Zanon	ASTM A312 TP 316L	Ref. # 24,25	2870/13,14,15,21	VEN 0600258/3,105790,10578	RX 245/06	PT-27/06	TEN-51/06, 53/06
Line B, HGR pipe with Compensator	E.Zanon	ASTM A312 TP 316L	Ref. # 33	2870/7,9,10,11,20	106/01, 204/00	RX 192/06, 194/06	PT-21/06	TEN-47/06
Line C, 4.5K Thermal Shield supply	E.Zanon	ASTM A312 TP 316L	Ref. # 36,37,38,39,40	2870/13,14,15,21	VEN 0600258/3,105790,10578	RX 245/06	PT-29/06	TEN-55/06
Line D, 4.5K Thermal Shield return	E.Zanon	Aluminum 6060 T5	Ref. # 45	2870/13,14,15,21	VEN 0600258/3,105790,10578	RX 205/06	PT-33/06	TEN-59/06
Line E, 70K Thermal Shield supply	E.Zanon	ASTM A312 TP 316L	Ref. # 36,37,38,39,40	2870/13,14,15,21	VEN 0600258/3,105790,10578	RX 245/06	PT-25/06	TEN-51/06, 53/06
Line F, 70K Thermal Shield return	E.Zanon	Aluminum 6060 T5	Ref. # 45	2870/13,14,15,21	VEN 0600258/3,105790,10578	RX 243/06	PT-35/06	TEN-61/06
Line H, Warmup/Cooldown	E.Zanon	ASTM A312 TP 316L	Ref. # 20,21,34,43	2870/11,13	VEN 0600258/3	RX 247/06	PT-31/06	TEN-57/06
Bimetallic Coupling	E.Zanon	Aluminum 5083,316L	Ref. # 42	No	No	No	TC9218-5	TC9218-5
Line G, 2-Phase He supply	Fermilab			Yes	Yes	No		
straight pipe section	(**)	Ti, Grade 2	No	No	No	Yes	Yes*	Yes*
miter bends weldment section	Ameriflex	Ti, Grade 2	Yes	No	No	No	Yes	Yes
2-Phase Pipe Bellows	Ameriflex	Ti, Grade 2	Yes	No	No	No	Yes	Yes
G-Cavity vessels line Circlet	**Fermilab**						Yes	Yes

WPS-Weld Procedure Specification. Yes-attached. No-documentation unavailable.

PQR-Procedure Qualification Record. Yes-attached. No-documentation unavailable.

* Pressure test is done with He Vessels.

(**)-Hi-Tech, Incodema

APPENDIX A.2 – DESY and INFN MECHANICAL DRAWINGS

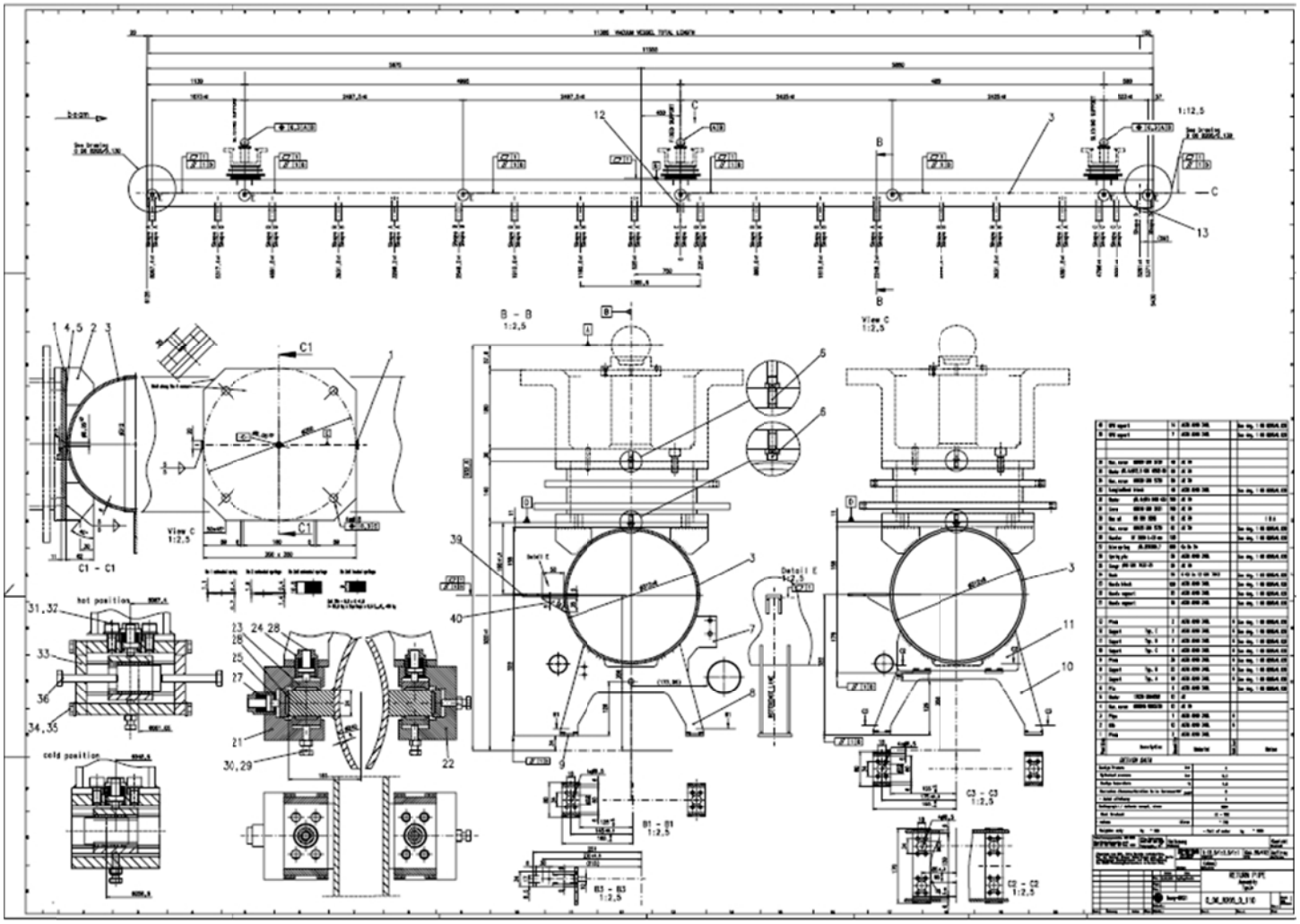

Cryogenic Line A: Helium Gas Return Pipe

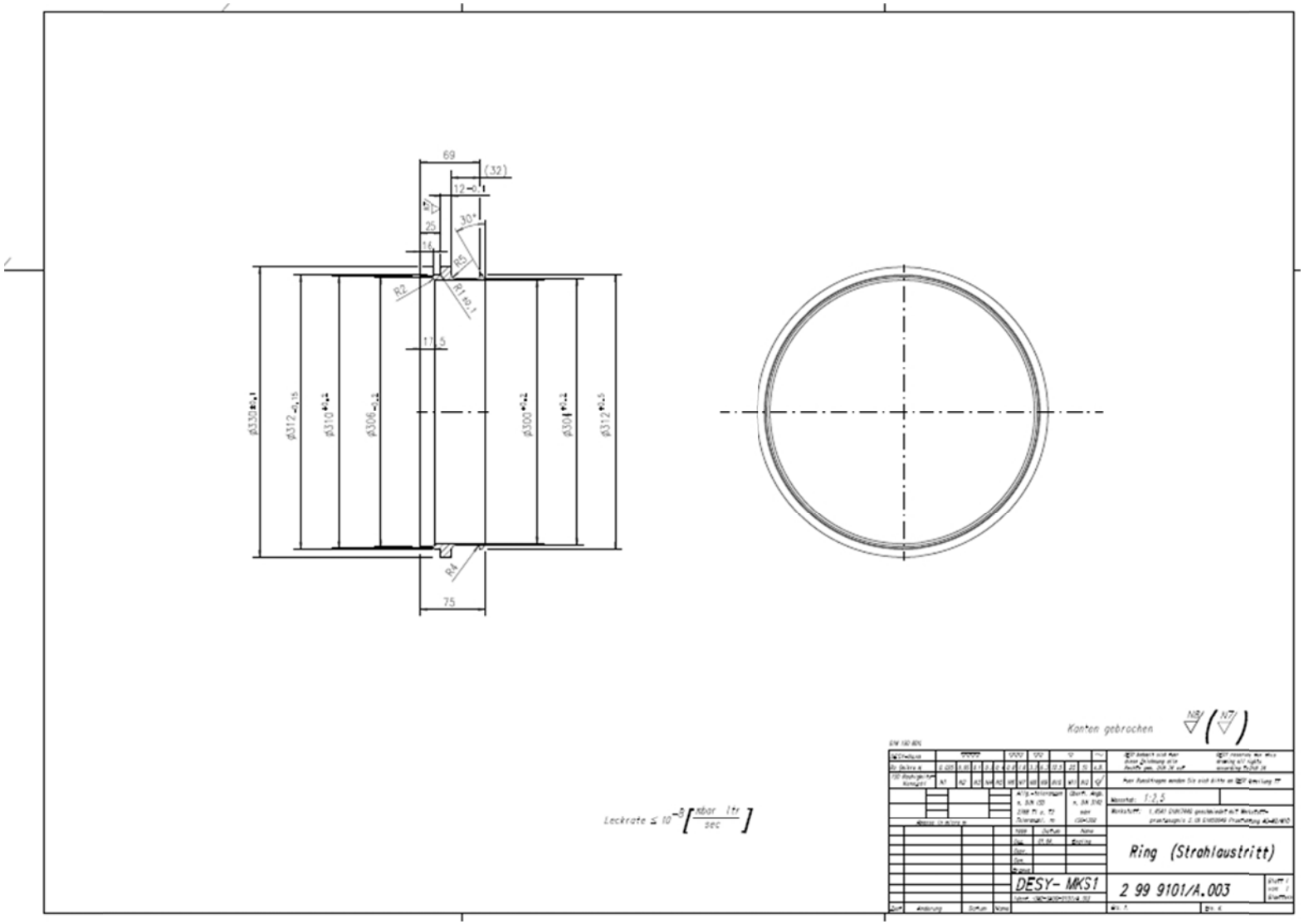

HGR Pipe End Ring

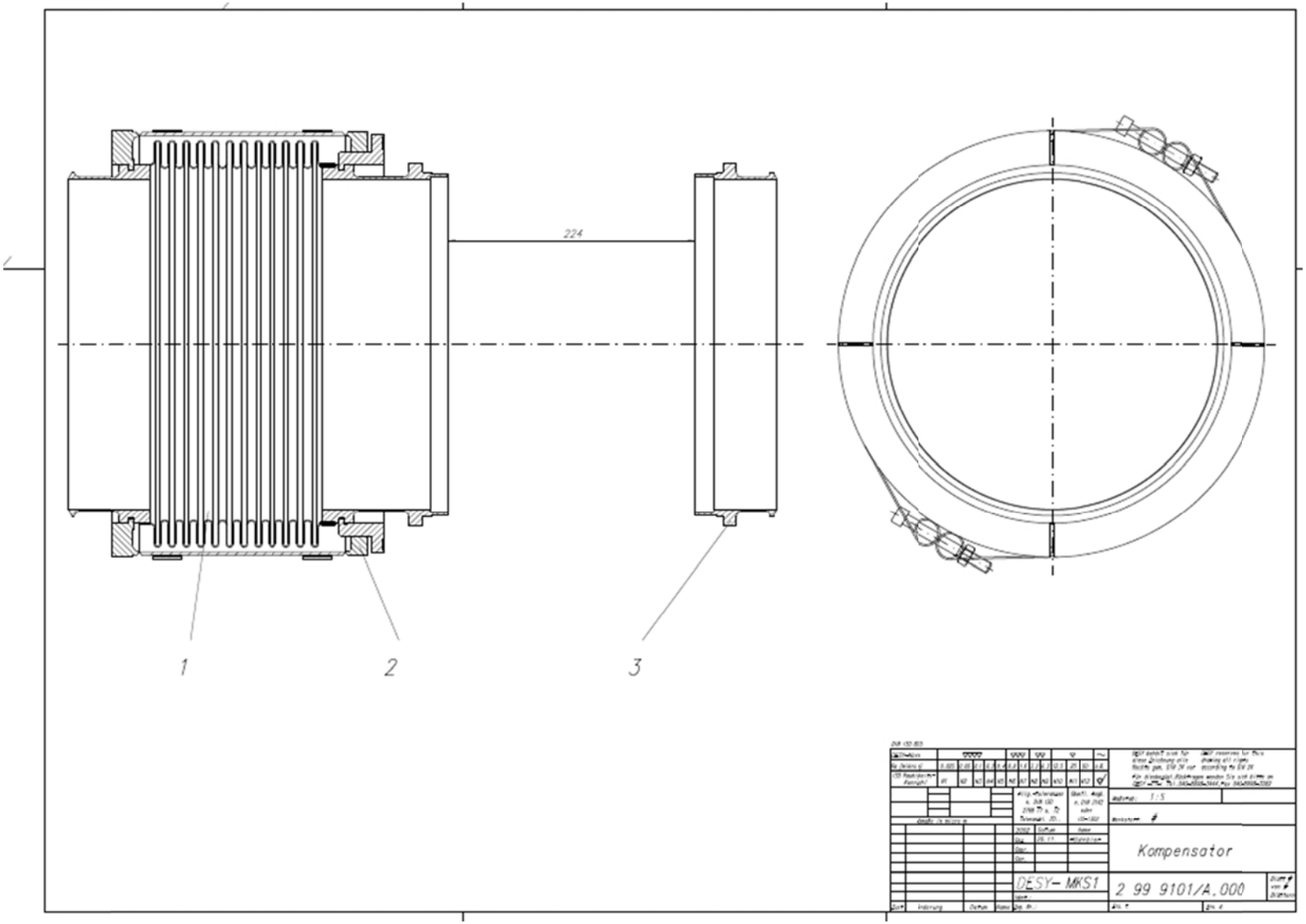

HGR Pipe Compensator

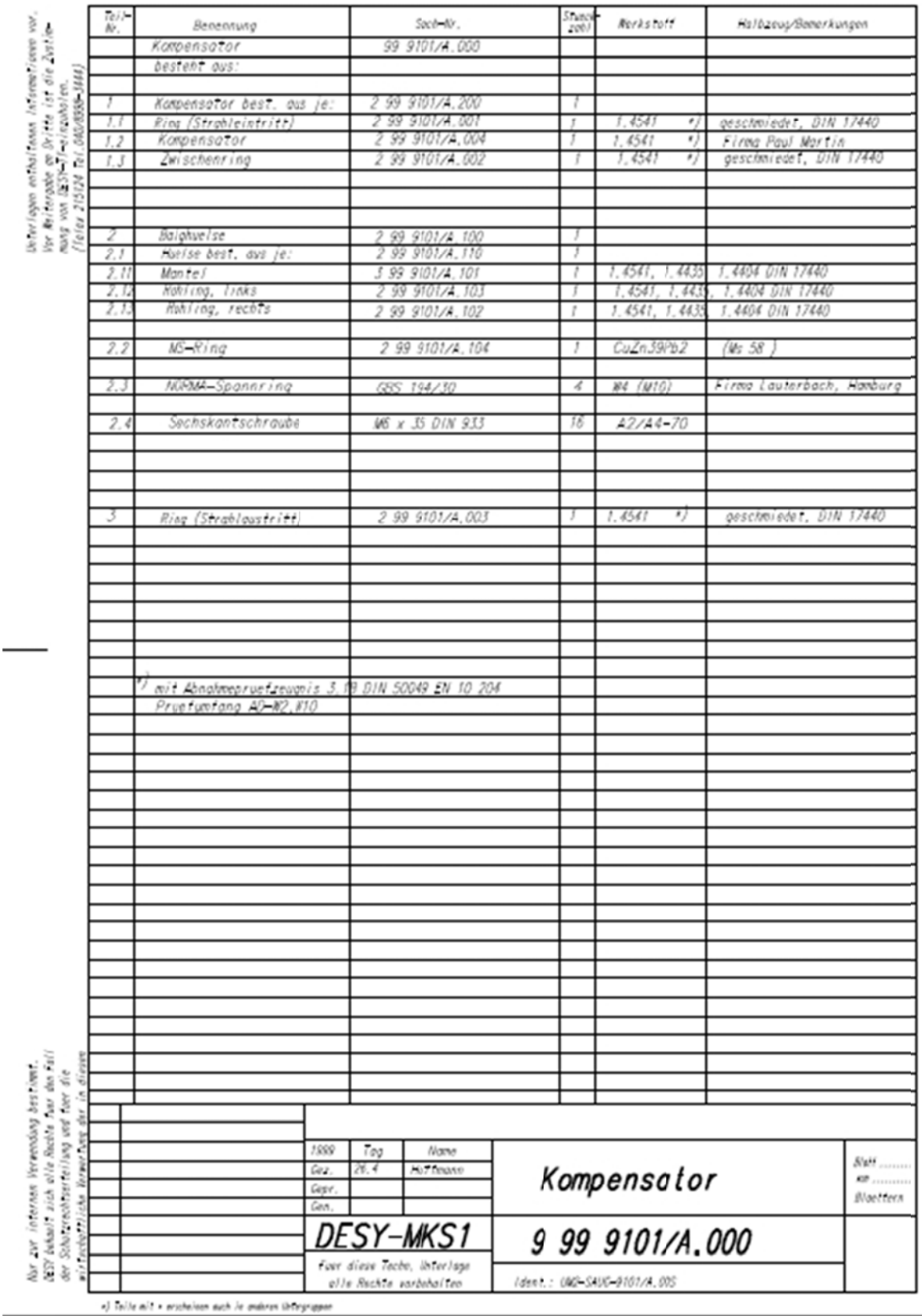

Unterlagen enthaltenen Informationen vor. Vor Weitergabe an Dritte ist die Zustimmung von DESY-Tf-einzuholen. (Telex 215124 Tel. 040/8998-3444)

Teil-Nr.	Benennung	Sach-Nr.	Stuck-zahl	Werkstoff	Halbzeug/Bemerkungen
	Kompensator	99 9101/A.000			
	besteht aus:				
1	Kompensator best. aus je:	2 99 9101/A.200	1		
1.1	Ring (Strahleintritt)	2 99 9101/A.001	1	1.4541 *)	geschmiedet, DIN 17440
1.2	Kompensator	2 99 9101/A.004	1	1.4541 *)	Firma Paul Martin
1.3	Zwischenring	2 99 9101/A.002	1	1.4541 *)	geschmiedet, DIN 17440
2	Balghuelse	2 99 9101/A.100	1		
2.1	Huelse best. aus je:	2 99 9101/A.110	1		
2.11	Mantel	3 99 9101/A.101	1	1.4541, 1.4435	1.4404 DIN 17440
2.12	Rohling, links	2 99 9101/A.103	1	1.4541, 1.4435	1.4404 DIN 17440
2.13	Rohling, rechts	2 99 9101/A.102	1	1.4541, 1.4435	1.4404 DIN 17440
2.2	MS-Ring	2 99 9101/A.104	1	CuZn39Pb2	(Ms 58)
2.3	NORMA-Spannring	GBS 194/30	4	W4 (M10)	Firma Lauterbach, Hamburg
2.4	Sechskantschraube	M6 x 35 DIN 933	16	A2/A4-70	
3	Ring (Strahlaustritt)	2 99 9101/A.003	1	1.4541 *)	geschmiedet, DIN 17440

*) mit Abnahmepruefzeugnis 3.1B DIN 50049 EN 10 204
Pruefumfang AD-W2,W10

1999	Tag	Name	Kompensator	Blatt ..... von ..... Blaettern
Gez.	26.4	Huttmann		
Gepr.				
Gen.				
DESY-MKS1			9 99 9101/A.000	
Fuer diese Techn. Unterlage alle Rechte vorbehalten			Ident.: UMG-SAUC-9101/A.00S	

Nur zur internen Verwendung bestimmt. DESY behielt sich alle Rechte fuer den Fall der Schutzrechtserteilung und fuer die wirtschaftliche Verwertung der in diesem

*) Teile mit * erscheinen auch in anderen Untergruppen

HGR Pipe Compensator Specification

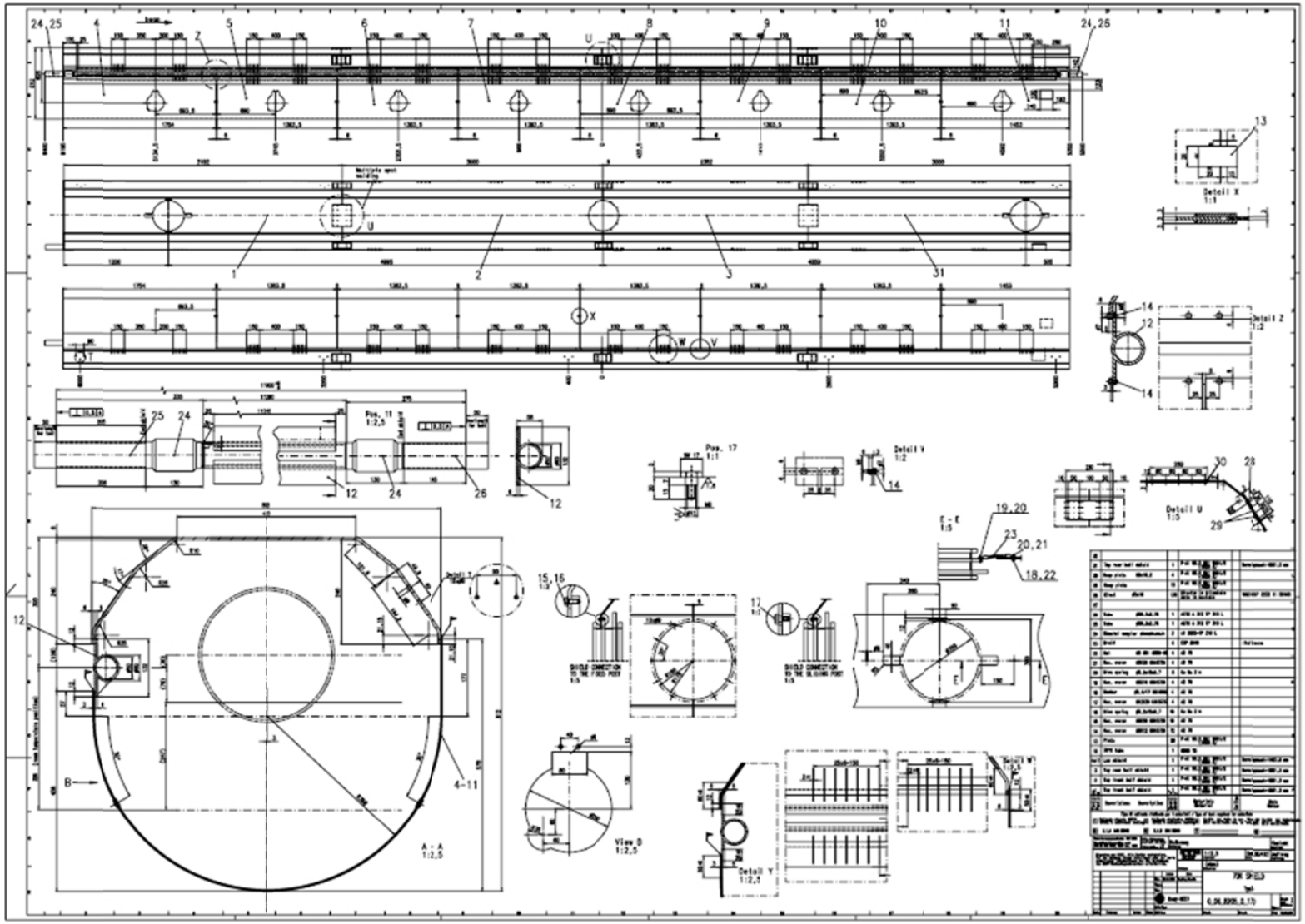

Cryogenic Line F: 70K Thermal Shield return

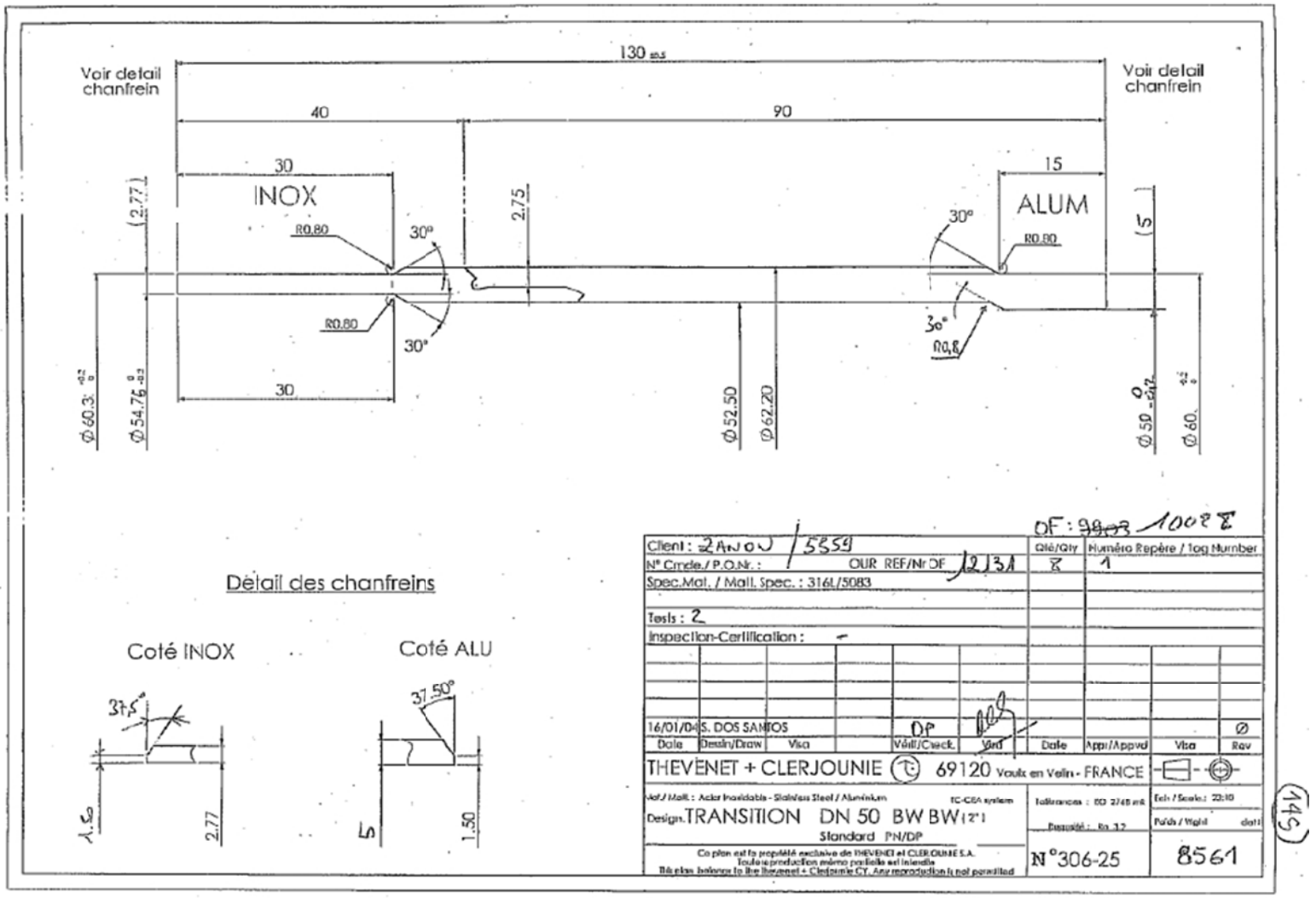

Bimetallic coupler (MANUFACTURER DRAWING)

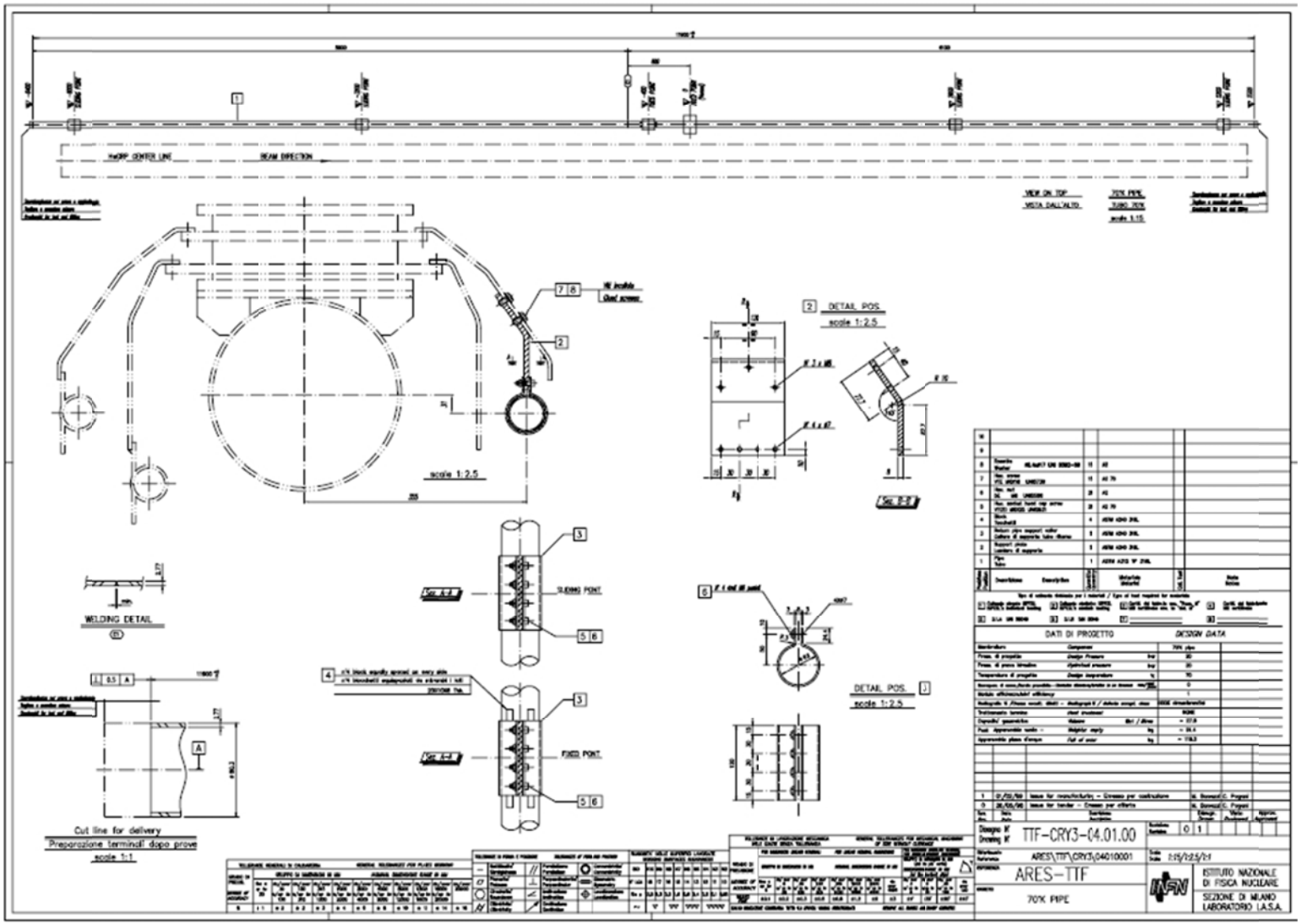

Cryogenic Line E: 70K Thermal Shield supply

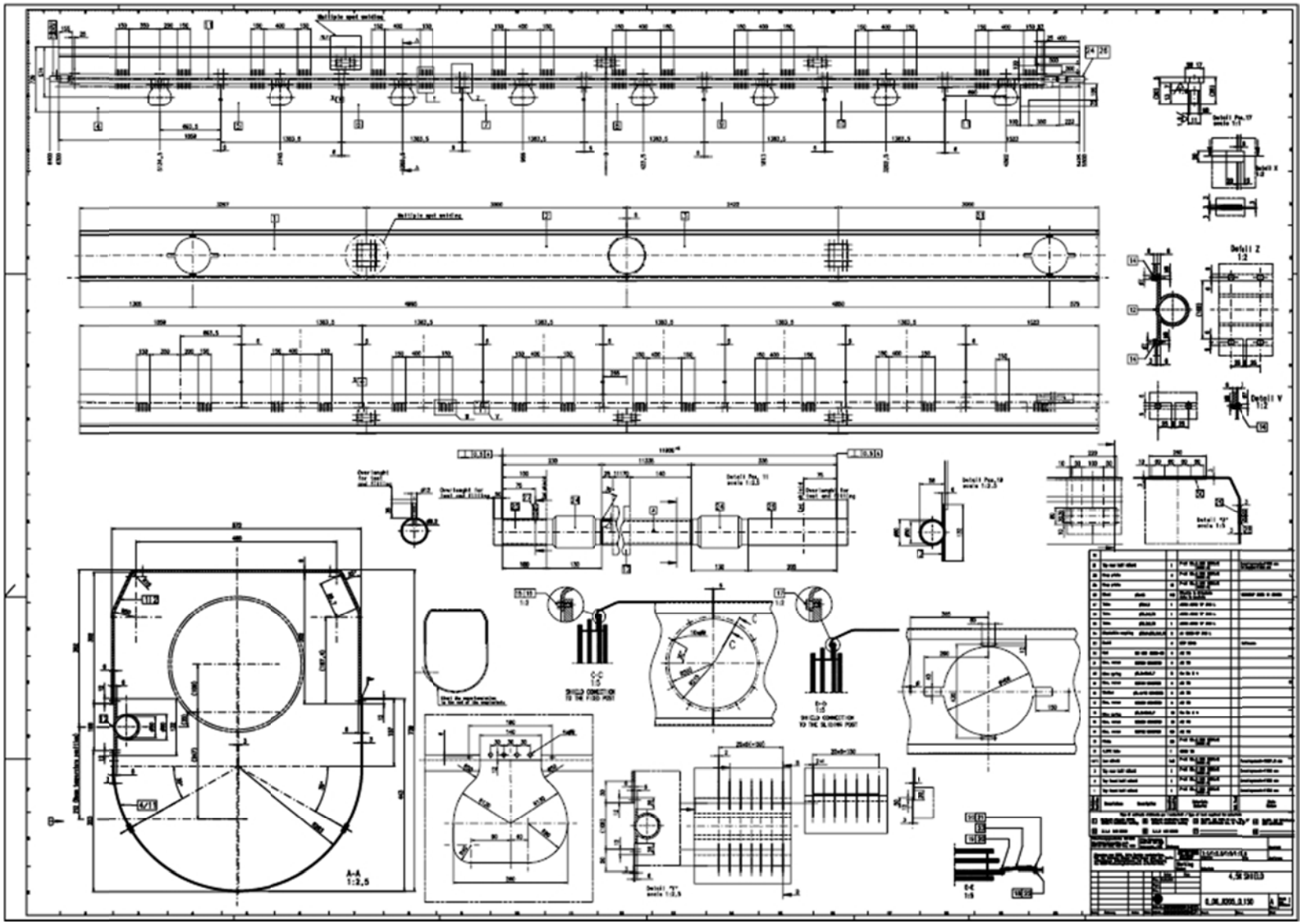

Cryogenic Line D: 5K Thermal Shield return

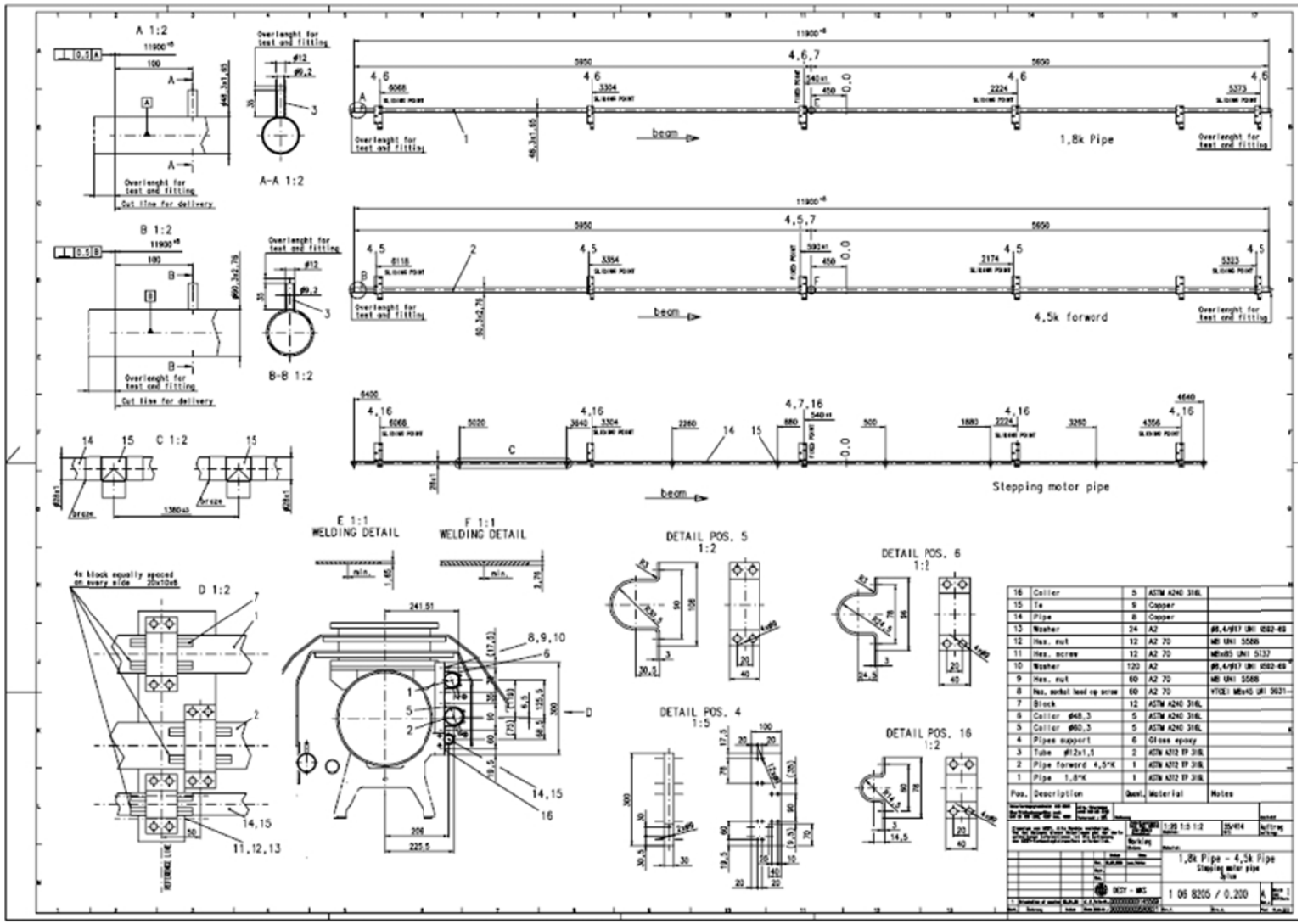

Cryogenic Lines A and C: 2K Helium supply pipe and 5K Thermal Shield supply

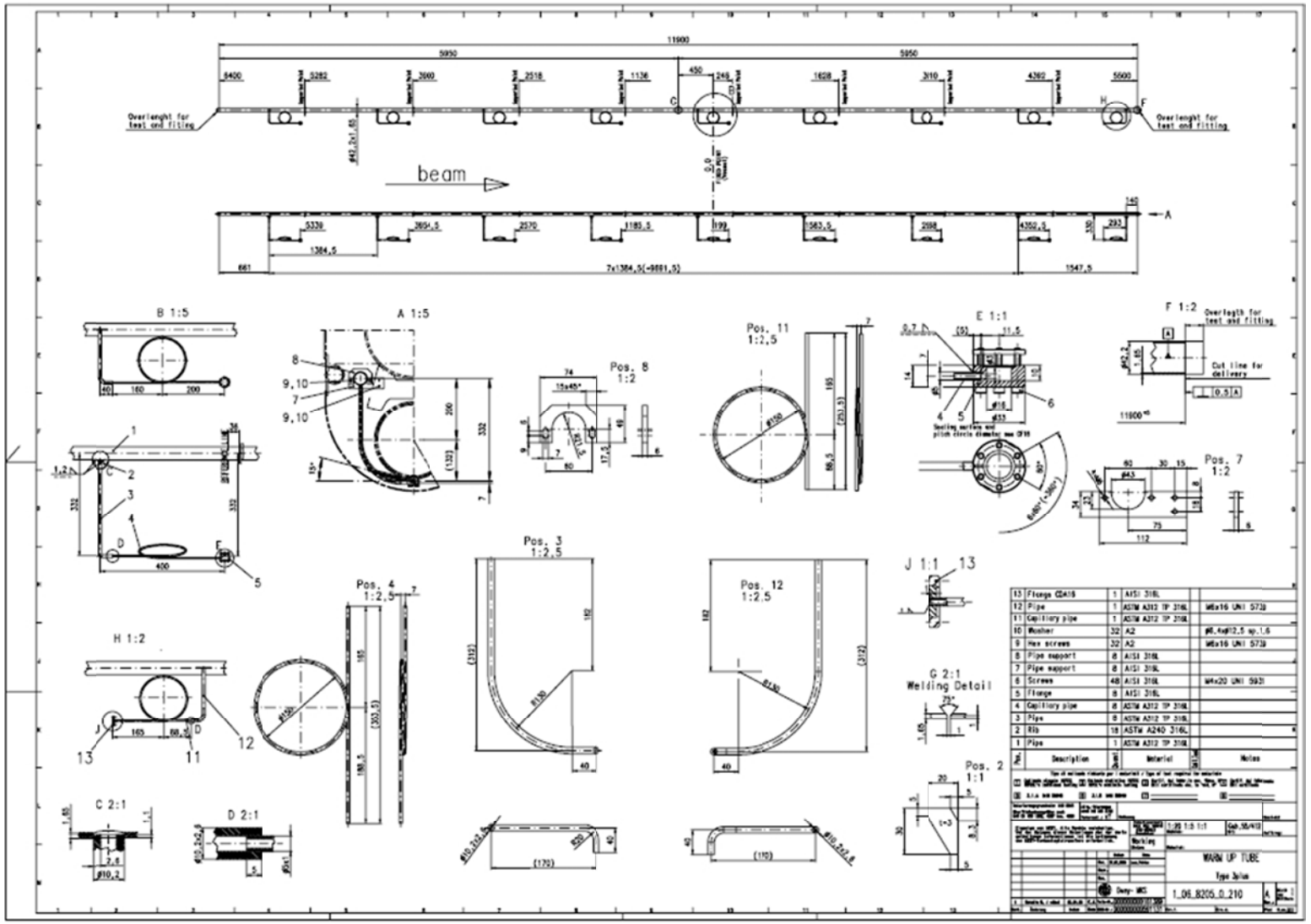

Cryogenic Line H : Warmup/cooldown

APPENDIX A.3 – FNAL MECHANICAL DRAWINGS

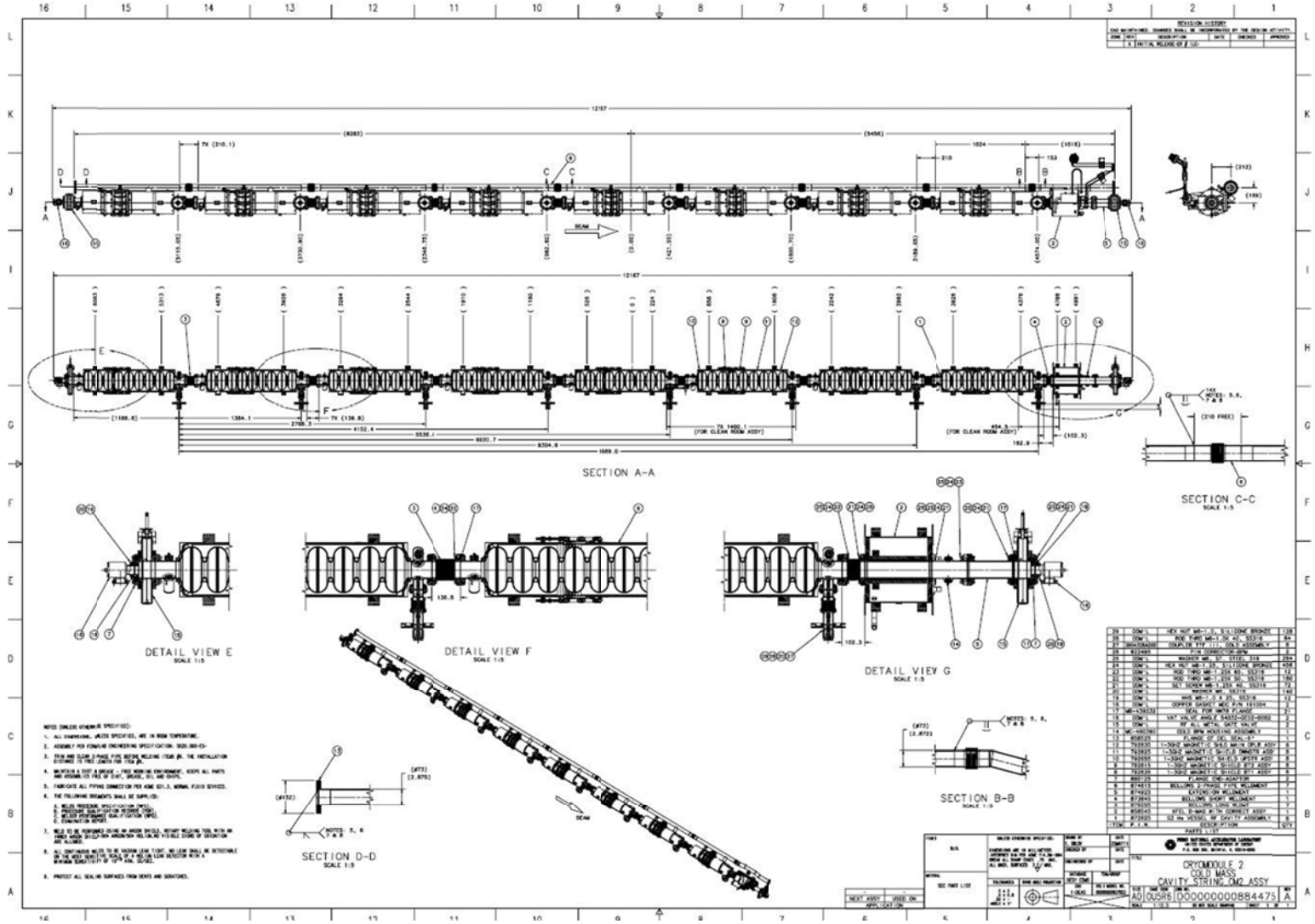

Cryogenic Line G: 2-Phase He supply, DWG #884475 (CM2 Cavity String)

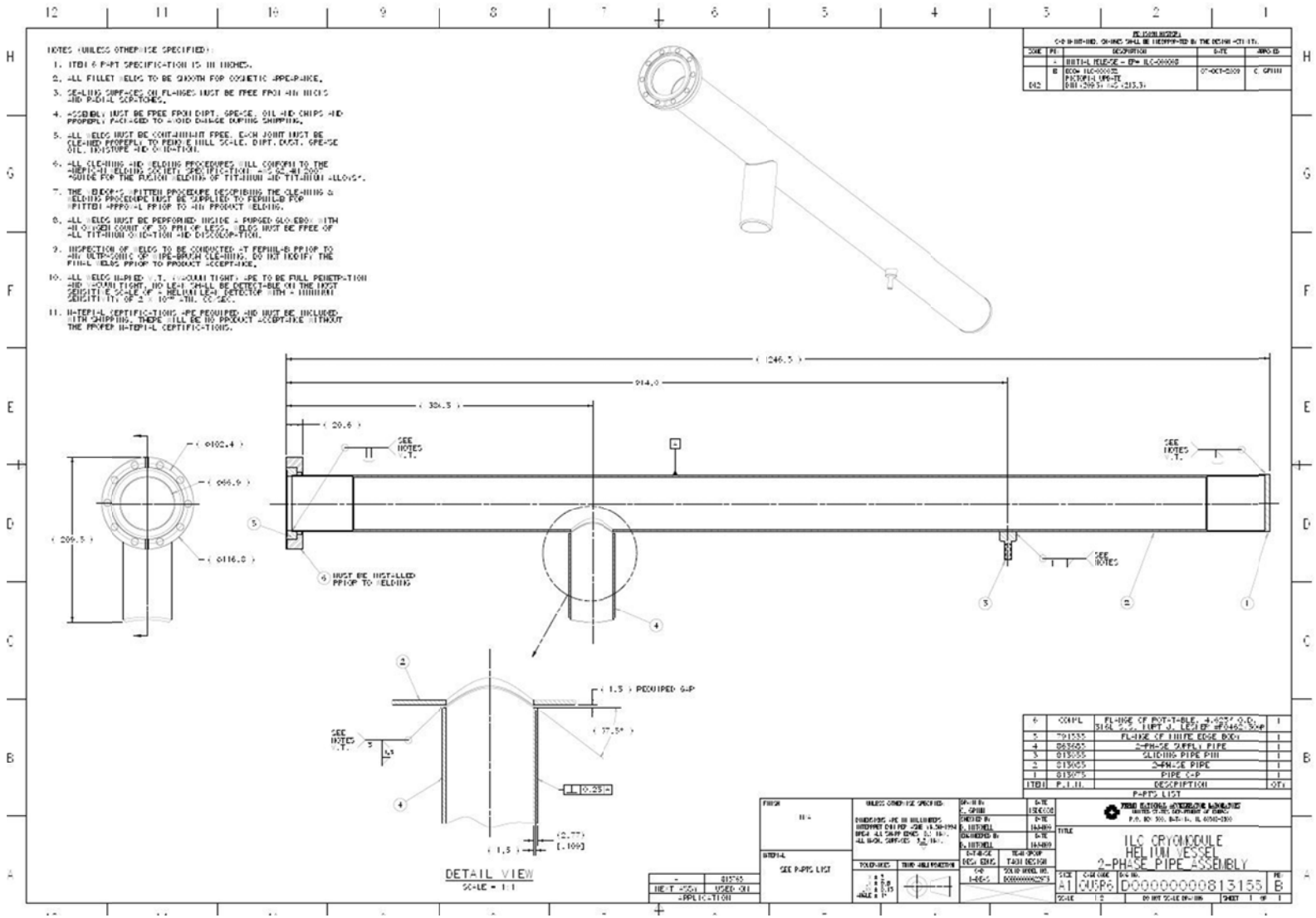

Cryogenic Line G: 2-Phase He supply, DWG #813155

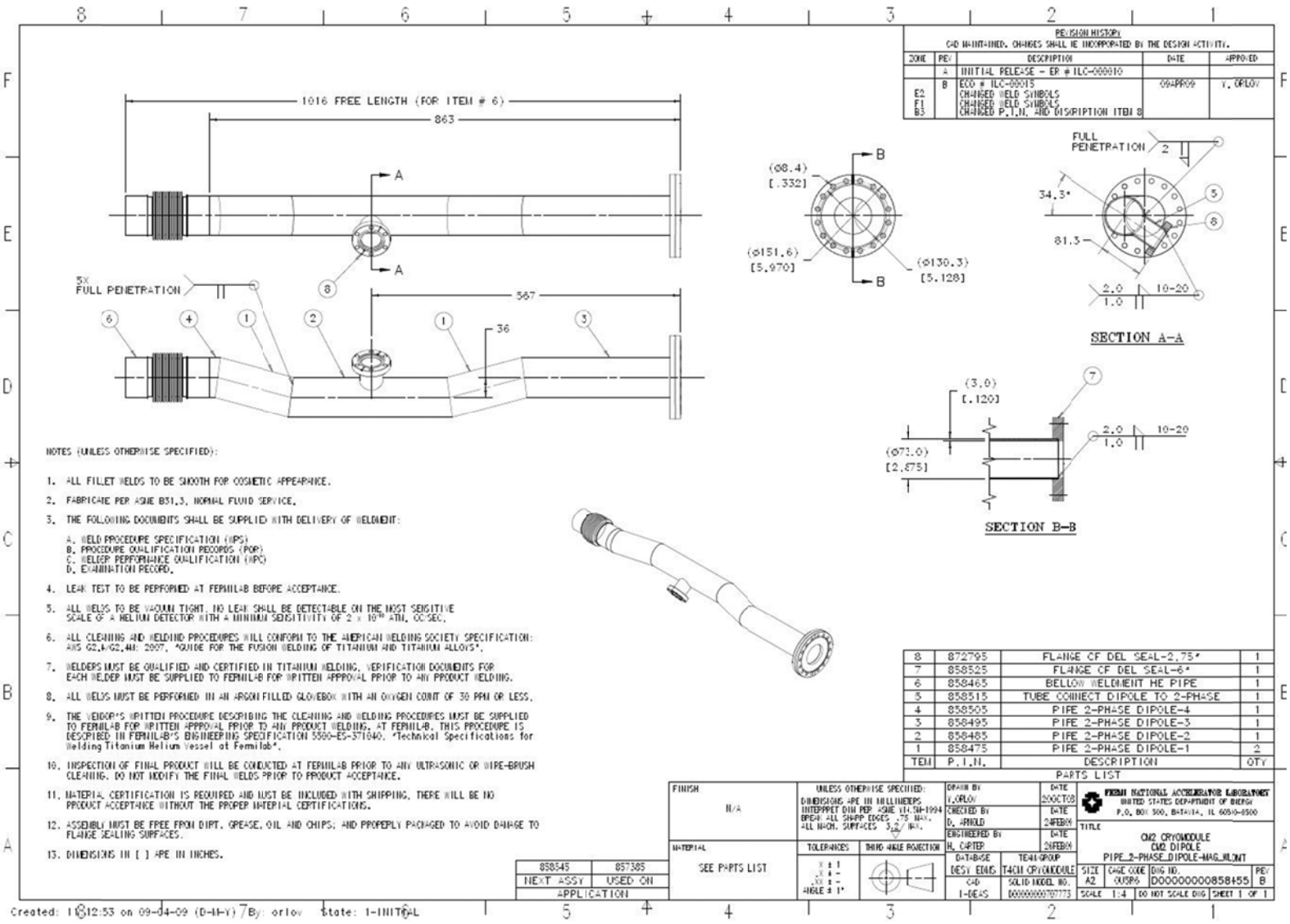

2-Phase He Pipe Magnet, DWG #858455

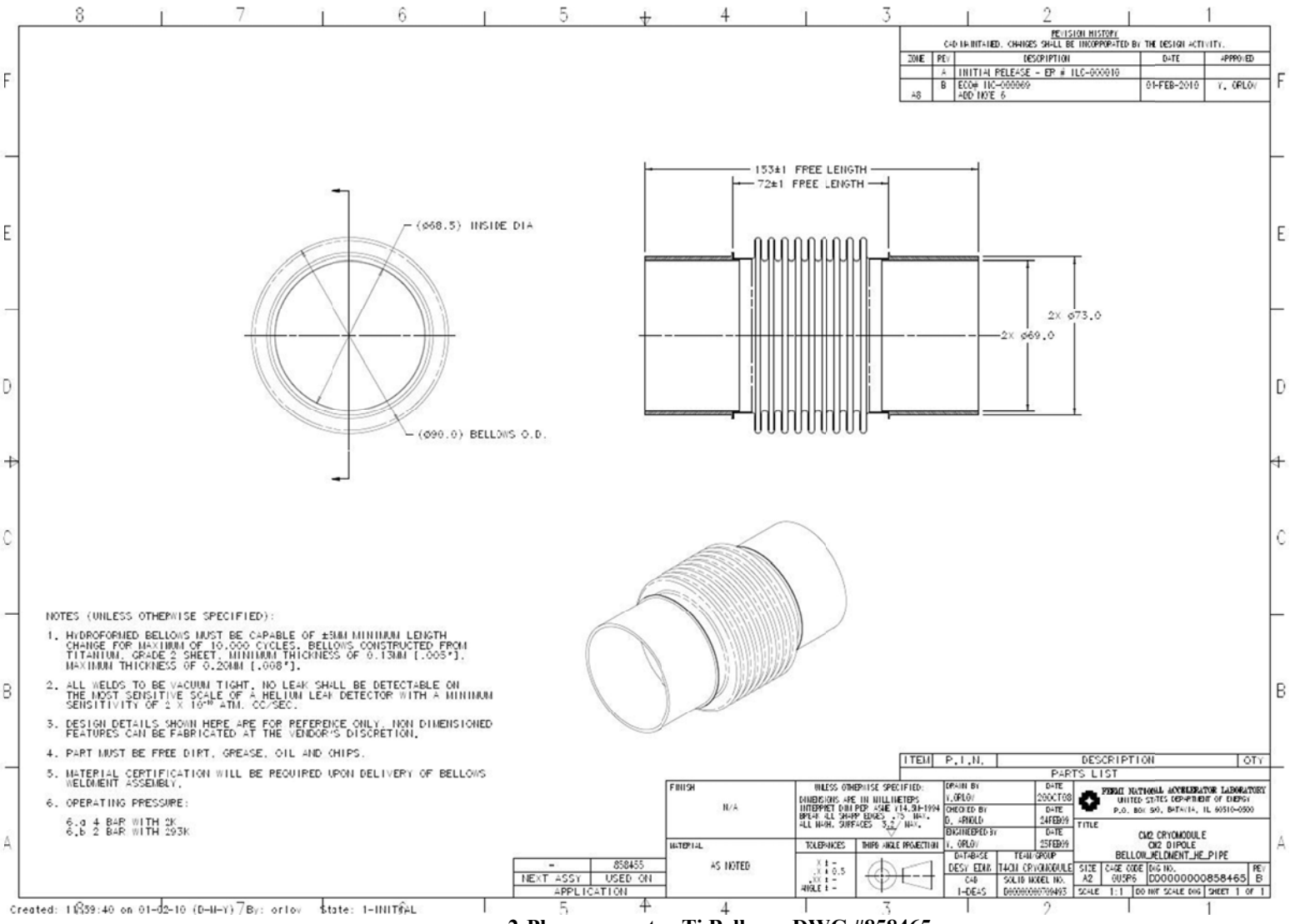

2-Phase corrector Ti Bellows, DWG #858465

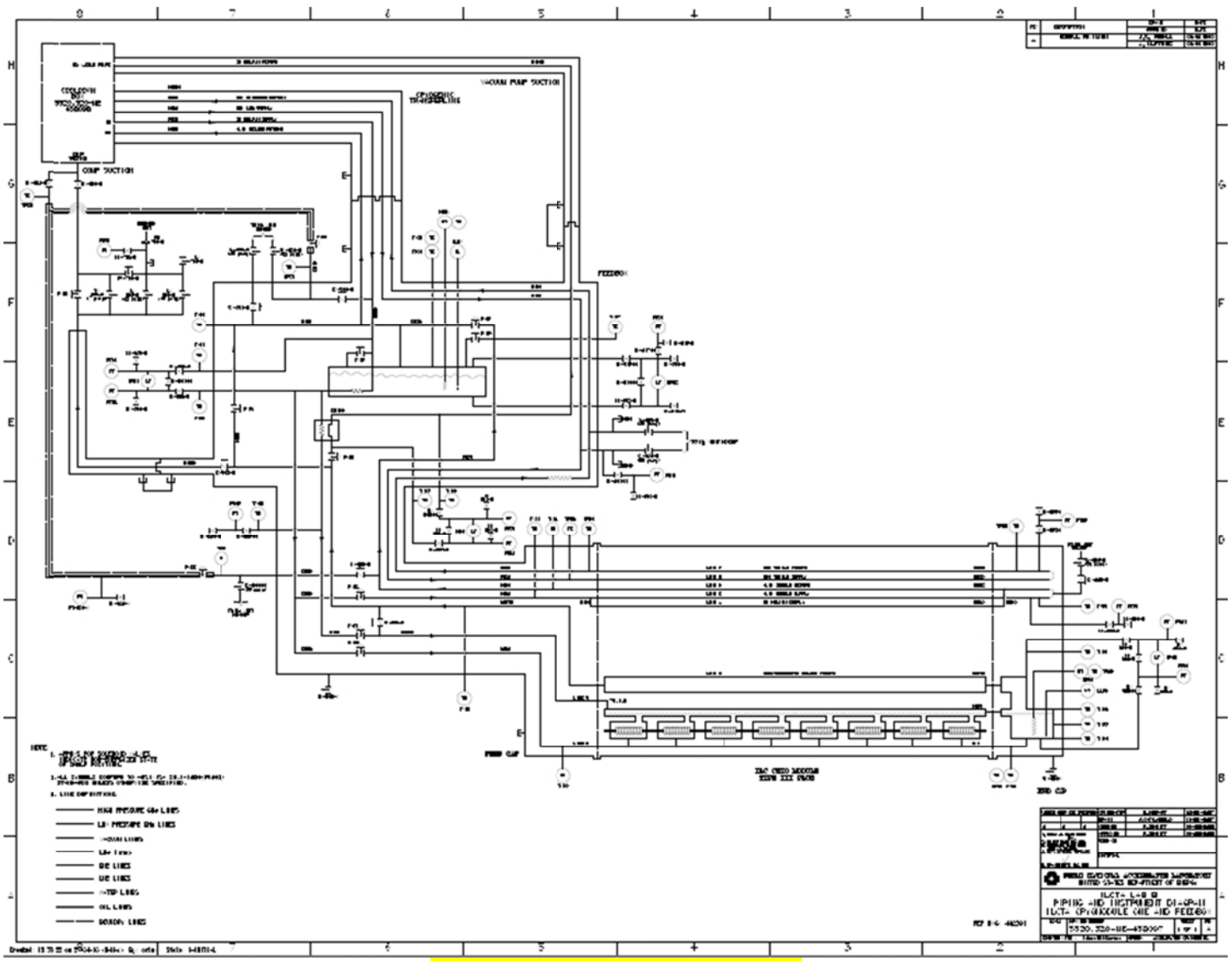

CM1 Piping and Instruments diagram

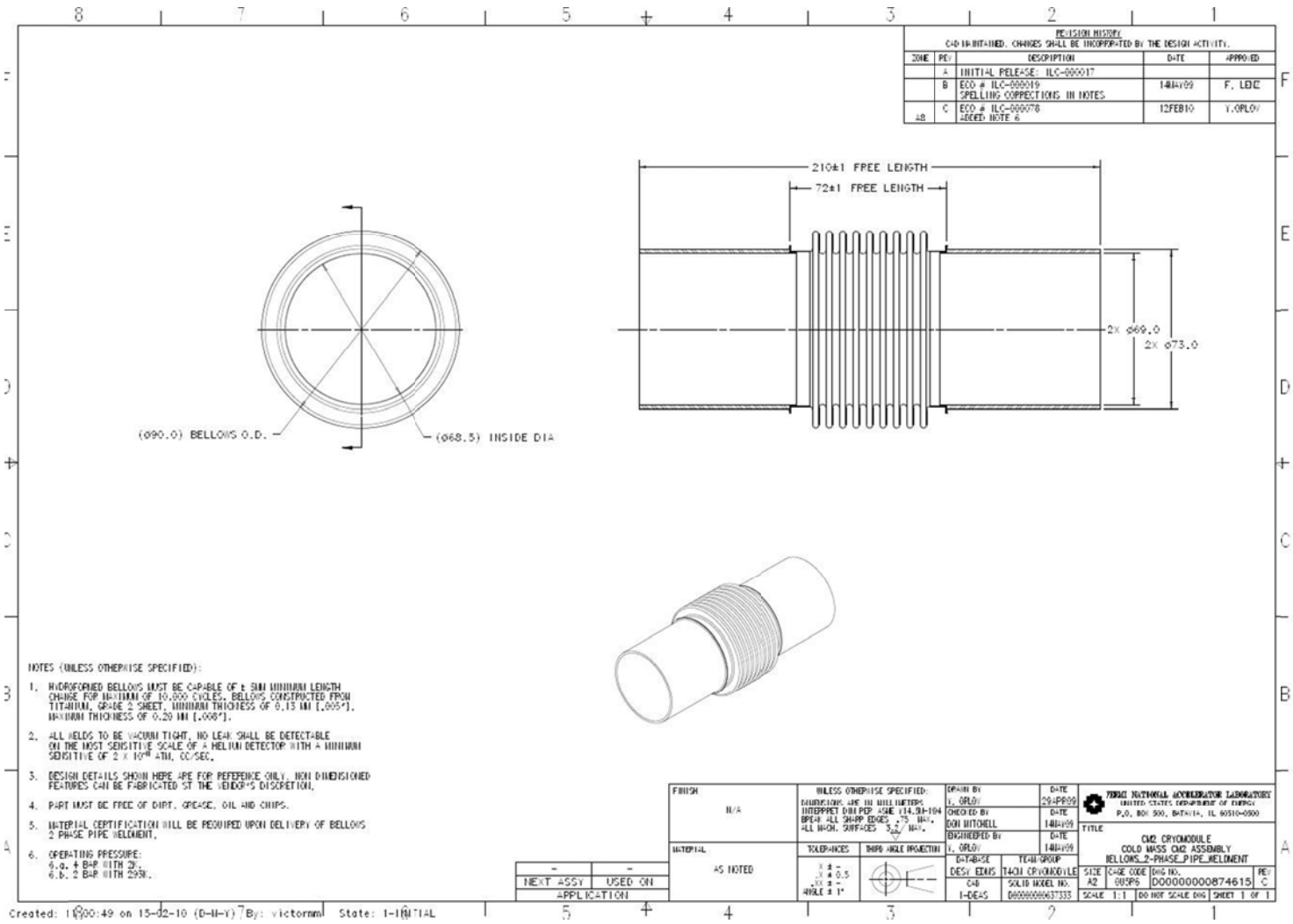

2-Phase He Pipe Bellows (Titanium), DWG #874615

APPENDIX A.4 – 5K & 80K piping relief calculation (by A. Klebaner and V. Martinez)

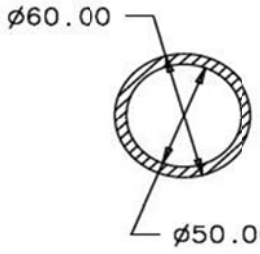

RELIEF VALVE SIZING

Loss of Vacuum Venting Calculation

CM-1 5K Shield Supply Circuit

Uninsulated Container

Dim [mm]
OD = 60
ID = 50
Length = 11,900

Authored by: A. Klebaner

Checked by: A. Martinez

Surface Area consists of the perimeter of the pipe times the total length. The pipe is uninsulated and contained within the insulated 5K shield.

			User Units		SI	
1	Pipe length	H =	39.0	ft	11900.00	mm
2	Pipe diameter	O.D. =	2.36	in	60.00	mm
3	Surface area uninsulated	S_u =	24.14	ft^2	2.24	m^2
4	Volume to be protected	V =	1.19	ft^3	0.03	m^3
5	Relieving pressure	P =	100	psia	689,473	Pa
6	Relieving temperature (*CGA S-1.3 Table 1 note*)	T_r =	-445.7	°F	7.94	K
7	Helium density at relieving conditions	ρ =	64.69	kg/m^3	64.69	kg/m^3
8	Helium viscosity at relieving conditions	μ =	2.72E-06	Pa-s	2.72E-06	Pa-s
9	Pseudo latent heat (*CGA S-1.3 Table 1 note*)	θ =	13.16	BTU/lbm	30.6	J/g
10	Compressibility factor	Z =	0.65		0.65	
11	Molecular weight	M =	4.003		4.003	
12	Ratio of specific heats at standard conditions	γ =	1.67		1.67	
13	Coefficient C, at standard conditions	C =	377.6		377.6	
14	Air condensation heat flux (see Note below)	W =	0.35	W/cm^2	0.35	W/cm^2
15	Required capacity of the relief valve (uninsulated) *CGA S-1.3*	$Q_{air-unins}$ =	1,172	SCFM Air	0.27	nm^3/hr Air
16	Total required capacity of the relief valve	Q_{He} =	3,344	SCFM He	0.78	nm^3/hr He
17	Effective coefficient of discharge *0.975 for reliefs, 0.62 for rupture disks*	K_d =	0.975		0.98	
18	Capacity correction factor	K_b =	1.00		1.00	
19	Combination correction factor (*API 520*)	K_c =	1.00		1.00	
20	Required RV area	A =	8.74E-02	in^2	5.64E-05	m^2
21	Minimal relief line size	d =	0.33	in	0.008	m
22	Relief line upstream diameter	$D_{relief\ line}$ =	1.51	in	0.038	m
23	Relief line cross section	$S_{relief\ line}$ =	1.80	in^2	0.0012	m^2
24	Mass flow rate	m =	0.256	kg/s	0.256	kg/s
25	Reynolds number	Re =	3.13E+06		3.13E+06	
26	Friction coefficient	f =	0.01481		0.01481	
27	Relief line length	$L_{relief\ line}$ =	20.00	ft	6.08	m
28	Pressure drop (max)	ΔP =	1.3E-01	psi	8.9E-01	kPa

The air condensation heat flux value of 4.0 W/cm^2 historically used is considered very conservative. Tests performed at DESY on the same type of cryomodule under similar conditions yielded a value of 0.23 W/cm^2 with a +/- accuracy of 50% for the 5K shield circuit. Therefore a more exact value of 0.35 W/cm^2 can be used instead of the overly conservative 4.0 W/cm^2 typically used.

Reference: "Experimental Tests of Fault Conditions During the Cryogenic Operation of a XFEL Prototype Cryomodule" by Boeckmann T., Hoppe D., Jensch K., Lange R., Maschmann W., Peterson B. and Schnautz T.

10/15/2010 Relief Valve Sizing NML Feedbox-Endcap2

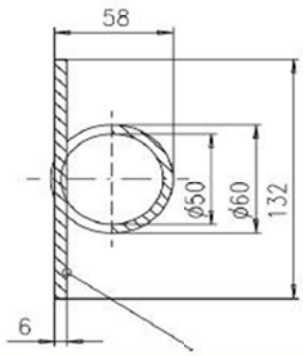

RELIEF VALVE SIZING

Loss of Vacuum Venting Calculation

CM-1 5K Shield Return Circuit

Uninsulated container

Dim [mm]
OD = 60
ID = 50
Plate W = 132
Ins. Th = 25
Plate Th = 6
Length = 11,900

Authored by: A. Klebaner

Checked by: A. Martinez

Surface Area consists of the perimeter of the pipe times the length only. The plate section is considered part of the shield and does not significantly contribute during a relief event. Pipe is uninsulated.

				User Units		SI	
1	Pipe length	H	=	39.0	ft	11900.00	mm
2	Pipe diameter	O.D.	=	2.36	in	60.00	mm
3	Surface area uninsulated	S_u	=	24.14	ft^2	2.24	m^2
4	Volume to be protected	V	=	1.19	ft^3	0.03	m^3
5	Relieving pressure	P	=	100	psia	689,473	Pa
6	Relieving temperature (*CGA S-1.3 Table 1 note*)	T_r	=	-445.7	°F	7.94	K
7	Helium density at relieving conditions	ρ	=	64.69	kg/m^3	64.69	kg/m^3
8	Helium viscosity at relieving conditions	μ	=	2.72E-06	Pa-s	2.72E-06	Pa-s
9	Pseudo latent heat (*CGA S-1.3 Table 1 note*)	θ	=	13.16	BTU/lbm	30.6	J/g
10	Compressibility factor	Z	=	0.65		0.65	
11	Molecular weight	M	=	4.003		4.003	
12	Ratio of specific heats at standard conditions	γ	=	1.67		1.67	
13	Coefficient C, at standard conditions	C	=	377.6		377.6	
14	Air condensation heat flux (see Note below)	W	=	0.35	W/cm^2	0.35	W/cm^2
15	Required capacity of the relief valve (uninsulated) *CGA S-1.3*	$Q_{air\text{-}unins}$	=	1,172	SCFM Air	0.27	nm^3/hr Air
16	Total required capacity of the relief valve	Q_{He}	=	3,344	SCFM He	0.78	nm^3/hr He
17	Effective coefficient of discharge *0.975 for reliefs, 0.62 for rupture disks*	K_d	=	0.975		0.98	
18	Capacity correction factor	K_b	=	1.00		1.00	
19	Combination correction factor (*API 520*)	K_c	=	1.00		1.00	
20	Required RV area	A	=	8.74E-02	in^2	5.64E-05	m^2
21	Minimal relief line size	d	=	0.33	in	0.008	m
22	Relief line upstream diameter	$D_{relief\ line}$	=	2.22	in	0.056	m
23	Relief line cross section	$S_{relief\ line}$	=	3.86	in^2	0.0025	m^2
24	Mass flow rate	m	=	0.256	kg/s	0.256	kg/s
25	Reynolds number	Re	=	2.13E+06		2.13E+06	
26	Friction coefficient	f	=	0.01399		0.01399	
27	Relief line length	$L_{relief\ line}$	=	20.00	ft	6.08	m
28	Pressure drop (max)	ΔP	=	1.8E-02	psi	1.2E-01	kPa

The air condensation heat flux value of 4.0 W/cm^2 historically used is considered very conservative. Tests performed at DESY on the same type of cryomodule under similar conditions yielded a value of 0.23 W/cm^2 with a +/- accuracy of 50% for the 5K shield circuit. Therefore a more exact value of 0.35 W/cm^2 can be used instead of the overly conservative 4.0 W/cm^2 typically used.

Reference: "Experimental Tests of Fault Conditions During the Cryogenic Operation of a XFEL Prototype Cryomodule" by Boeckmann T., Hoppe D., Jensch K., Lange R., Maschmann W., Peterson B. and Schnautz T.

10/15/2010 Relief Valve Sizing NML Feedbox-Endcap2

RELIEF VALVE SIZING

Loss of Vacuum Venting Calculation

CM-1 80K Shield Supply Circuit

Uninsulated Container

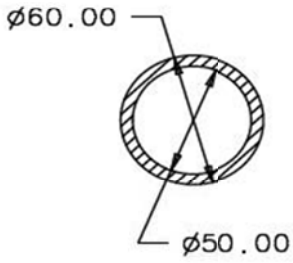

Dim [mm]
OD = 60
ID = 50
Length = 11,900

Authored by: A. Klebaner

Checked by: A. Martinez

Surface Area consists of the perimeter of the pipe times the length only. The plate section is considered part of the shield and does not significantly contribute during a relief event. Pipe is uninsulated.

			User Units		SI	
1	Pipe length	H =	39.0	ft	11900.00	mm
2	Pipe diameter	O.D. =	2.36	in	60.00	mm
3	Surface area uninsulated	S_u =	24.14	ft^2	2.24	m^2
4	Volume to be protected	V =	1.19	ft^3	0.03	m^3
5	Relieving pressure	P =	100	psia	689,473	Pa
6	Relieving temperature (*CGA S-1.3 Table 1 note*)	T_r =	-282.8	°F	98.45	K
7	Nitrogen latent heat	θ =	70.70	BTU/lbm	164.4	J/g
8	Compressibility factor	Z =	0.87		0.87	
9	Molecular weight	M =	28.000		28.000	
10	Ratio of specific heats at standard conditions	γ =	1.40		1.40	
11	Coefficient C, at standard conditions	C =	356.1		356.1	
12	Air condensation heat flux [see Note below)	W =	0.023	W/cm^2	0.023	W/cm^2
13	Required capacity of the relief valve (uninsulated) *CGA S-1.3*	$Q_{air\text{-}unins}$ =	6	SCFM Air	0.00	nm^3/hr Air
14	Total required capacity of the relief valve	Q_{N2} =	6	SCFM N2	0.00	nm^3/hr N2
15	Mass flow rate	m =	0.0031	kg/s	0.0031	kg/s
16	Effective coefficient of discharge *0.975 for reliefs, 0.62 for rupture disks*	K_d =	0.975		0.98	
17	Capacity correction factor	K_b =	1.00		1.00	
18	Combination correction factor (*API 520*)	K_c =	1.00		1.00	
19	Required RV area	A =	1.77E-03	in^2	1.14E-06	m^2
20	Minimal relief line size	d =	0.05	in	0.001	m

The air condensation heat flux value of 4.0 W/cm^2 historically used is considered very conservative. Tests performed at DESY on the same type of cryomodule under similar conditions yielded a value of 0.015 W/cm^2 with a +/- accuracy of 50% for the 80K shield circuit. Therefore a more exact value of 0.023 W/cm^2 can be used instead of the overly conservative 4.0 W/cm^2 typically used.

Reference: "Experimental Tests of Fault Conditions During the Cryogenic Operation of a XFEL Prototype Cryomodule" by Boeckmann T., Hoppe D., Jensch K., Lange R., Maschmann W., Peterson B. and Schnautz T.

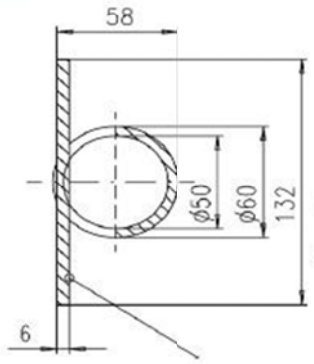

RELIEF VALVE SIZING

Loss of Vacuum Venting Calculation

CM-1 80K Shield Return Circuit

Uninsulated Container

Dim [mm]
OD = 60
ID = 50
Plate W = 132
Ins. Th = 25
Plate Th = 6
Length = 11,900

Authored by: A.Klebaner

Checked by: A. Martinez

Surface Area consists of the perimeter of the pipe times the length only. The plate section is considered part of the shield and does not significantly contribute during a relief event. Pipe is uninsulated.

			User Units		SI	
1	Pipe length	H =	39.0	ft	11900.00	mm
2	Pipe diameter	O.D. =	2.36	in	60.00	mm
3	Surface area uninsulated	S_u =	24.14	ft^2	2.24	m^2
4	Volume to be protected	V =	1.19	ft^3	0.03	m^3
5	Relieving pressure	P =	100	psia	689,473	Pa
6	Relieving temperature (*CGA S-1.3 Table 1 note*)	T_r =	-282.8	°F	98.45	K
7	Nitrogen latent heat	θ =	70.70	BTU/lbm	164.4	J/g
8	Compressibility factor	Z =	0.87		0.87	
9	Molecular weight	M =	28.000		28.000	
10	Ratio of specific heats at standard conditions	γ =	1.40		1.40	
11	Coefficient C, at standard conditions	C =	356.1		356.1	
12	Air condensation heat flux (see Note below)	W =	0.023	W/cm^2	0.023	W/cm^2
13	Required capacity of the relief valve (uninsulated) *CGA S-1.3*	$Q_{air-unins}$ =	6	SCFM Air	0.00	nm^3/hr Air
14	Total required capacity of the relief valve	Q_{N2} =	6	SCFM N2	0.00	nm^3/hr N2
15	Mass flow rate	m =	0.0031	kg/s	0.0031	kg/s
16	Effective coefficient of discharge *0.975 for reliefs, 0.62 for rupture disks*	K_d =	0.975		0.98	
17	Capacity correction factor	K_b =	1.00		1.00	
18	Combination correction factor (*API 520*)	K_o =	1.00		1.00	
19	Required RV area	A =	1.77E-03	in^2	1.14E-06	m^2
20	Minimal relief line size	d =	0.05	in	0.001	m

The air condensation heat flux value of 4.0 W/cm^2 historically used is considered very conservative. Tests performed at DESY on the same type of cryomodule under similar conditions yielded a value of 0.015 W/cm^2 with a +/- accuracy of 50% for the 80K shield circuit. Therefore a more exact value of 0.023 W/cm^2 can be used instead of the overly conservative 4.0 W/cm^2 typically used.

Reference: "Experimental Tests of Fault Conditions During the Cryogenic Operation of a XFEL Prototype Cryomodule" by Boeckmann T., Hoppe D., Jensch K., Lange R., Maschmann W., Peterson B. and Schnautz T.

RELIEF VALVE SIZING

Fire Conditions

CM-1 5K Shield Supply Circuit

Uninsulated container

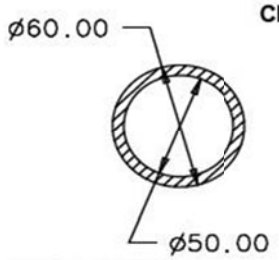

All dimensions are in [mm]

Dim [mm]
OD = 60
ID = 50
Length = 11,900

Authored by: A. Klebaner

Checked by: A. Martinez

Surface Area consists of the perimeter of the pipe times the total length. The pipe is uninsulated and contained within the insulated 5K shield.

			User Units		SI	
1	Pipe length	H =	39.0	ft	11900.00	mm
2	Pipe outer diameter	O.D. =	2.36	in	60.00	mm
3	Surface area	S =	24.14	ft^2	2.24	m^2
4	Volume to be protected	V =	1.19	ft^3	0.03	m^3
5	Relieving pressure	P =	100	psia	689,473	Pa
6	Relieving temperature (*CGA S-1.3 Table 1 note*)	T_r =	-445.7	°F	7.94	K
7	Helium conductivity (*at average of T_{fire} and Tr*)	k =	0.12	BTU/hr-ft-F	0.21	W/m-K
8	Helium density at relieving conditions	ρ =	64.69	kg/m^3	64.69	kg/m^3
9	Helium viscosity at relieving conditions	μ =	2.72E-06	Pa-s	2.72E-06	Pa-s
10	Pseudo latent heat (*CGA S-1.3 Table 1 note*)	θ =	13.16	BTU/lbm	30.6	J/g
11	Compressibility factor	Z =	0.65		0.65	
12	Molecular weight	M =	4.003		4.003	
13	Ratio of specific heats at standard conditions	γ =	1.67		1.67	
14	Coefficient C, at standard conditions	C =	377.6		377.6	
15a	Correction factor (*CGA S-1.3*)	F =	1.00		1.00	
15b	Gas factor for uninsulated containers (*CGA S-1.3*)	G_u =	193.3		193.3	
16	Fire temperature (*CGA S-1.3*)	T_{fire} =	1200	°F	922	K
17	Required capacity of the relief valve *CGA S-1.3*	Q_{Air} =	2,631	SCFM Air	0.61	nm^3/hr Air
18	Required capacity of the relief valve	Q_{He} =	7,508	SCFM He	1.75	nm^3/hr He
19	Effective coefficient of discharge *0.975 for reliefs, 0.62 for rupture disks*	K_d =	0.975		0.98	
20	Capacity correction factor	K_b =	1.00		1.00	
21	Combination correction factor (*API 520*)	K_c =	1.00		1.00	
22	Required RV area (*API 520 Sec. 4.3.2.1*)	A =	1.96E-01	in^2	1.27E-04	m^2
23	Minimal relief line size	d =	0.50	in	0.013	m
24	Relief line upstream diameter	$D_{relief\ line}$ =	1.51	in	0.038	m
25	Relief line cross section	$S_{relief\ line}$ =	1.79	in^2	0.0012	m^2
26	Mass flow rate	m =	0.576	kg/s	0.576	kg/s
27	Reynolds number	Re =	7.04E+06		7.04E+06	
28	Friction coefficient	f =	0.01466		0.01466	
29	Relief line length	$L_{relief\ line}$ =	20.00	ft	6.08	m
30	Pressure drop (max)	ΔP =	6.5E-01	psi	4.5E+00	kPa

10/15/2010 Fire 5K Shield Supply Relief Valve Sizing NML Feedbox-Endcap2

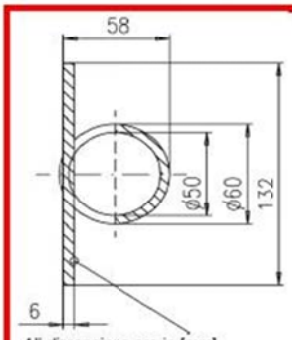

All dimensions are in [mm]

RELIEF VALVE SIZING

Fire Conditions

CM-1 5K Shield Return Circuit

Uninsulated container

Dim [mm]
OD = 60
ID = 50
Plate W = 132
Ins. Th = 25
Plate Th = 6
Length = 11,900

Authored by: A. Klebaner

Checked by: A. Martinez

Surface Area consists of the perimeter of the pipe times the length only. The plate section is considered part of the shield and does not significantly contribute during a relief event. Pipe is uninsulated.

			User Units		SI	
1	Pipe length	H =	39.0	ft	11900.00	mm
2	Pipe outer diameter	O.D. =	2.36	in	60.00	mm
3	Surface area	S =	24.14	ft^2	2.24	m^2
4	Volume to be protected	V =	1.19	ft^3	0.03	m^3
5	Relieving pressure	P =	100	psia	689,473	Pa
6	Relieving temperature (*CGA S-1.3 Table 1 note*)	T_r =	-445.7	°F	7.94	K
7	Helium conductivity (*at average of T_{fire} and Tr*)	k =	0.12	BTU/hr-ft-F	0.21	W/m-K
8	Helium density at relieving conditions	ρ =	64.69	kg/m^3	64.69	kg/m^3
9	Helium viscosity at relieving conditions	μ =	2.72E-06	Pa-s	2.72E-06	Pa-s
10	Pseudo latent heat (*CGA S-1.3 Table 1 note*)	θ =	13.16	BTU/lbm	30.6	J/g
11	Compressibility factor	Z =	0.65		0.65	
12	Molecular weight	M =	4.003		4.003	
13	Ratio of specific heats at standard conditions	γ =	1.67		1.67	
14	Coefficient C, at standard conditions	C =	377.6		377.6	
15a	Correction factor (*CGA S-1.3*)	F =	1.00		2.54	
15b	Gas factor for uninsulated containers (*CGA S-1.3*)	G_u =	193.3		193.3	
16	Fire temperature (*CGA S-1.3*)	T_{fire} =	1200	°F	922	K
17	Required capacity of the relief valve *CGA S-1.3*	Q_{Air} =	2,631	SCFM Air	0.61	nm^3/hr Air
18	Required capacity of the relief valve	Q_{He} =	7,508	SCFM He	1.75	nm^3/hr He
19	Effective coefficient of discharge *0.975 for reliefs, 0.62 for rupture disks*	K_d =	0.975		0.98	
20	Capacity correction factor	K_b =	1.00		1.00	
21	Combination correction factor (*API 520*)	K_c =	1.00		1.00	
22	Required RV area (*API 520 Sec. 4.3.2.1*)	A =	1.96E-01	in^2	1.27E-04	m^2
23	Minimal relief line size	d =	0.50	in	0.013	m
24	Relief line upstream diameter	$D_{relief\ line}$ =	2.22	in	0.056	m
25	Relief line cross section	$S_{relief\ line}$ =	3.87	in^2	0.0025	m^2
26	Mass flow rate	m =	0.576	kg/s	0.576	kg/s
27	Reynolds number	Re =	4.79E+06		4.79E+06	
28	Friction coefficient	f =	0.01369		0.01369	
29	Relief line length	$L_{relief\ line}$ =	20.00	ft	6.08	m
30	Pressure drop (max)	ΔP =	8.8E-02	psi	6.1E-01	kPa

10/15/2010 Fire 5K Shield Return Relief Valve Sizing NML Feedbox-Endcap2

RELIEF VALVE SIZING

Fire Conditions

CM-1 80K Shield Supply Circuit

Uninsulated container

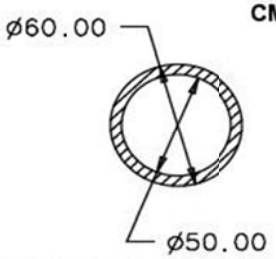

All dimensions are in [mm]

Dim [mm]
OD = 60
ID = 50
Length = 11,900

Authored by: A. Klebaner

Checked by: A. Martinez

Surface Area consists of the perimeter of the pipe times the total length. The pipe is uninsulated and contained within the insulated 5K shield.

			User Units		SI	
1	Pipe length	H =	39.0	ft	11900.00	mm
2	Pipe outer diameter	O.D. =	2.36	in	60.00	mm
3	Surface area	S =	24.14	ft^2	2.24	m^2
4	Volume to be protected	V =	1.19	ft^3	0.03	m^3
5	Relieving pressure	P =	100	psia	689,473	Pa
6	Relieving temperature (*CGA S-1.3 Table 1 note*)	T_r =	-282.8	°F	98.45	K
7	Nitrogen latent heat	θ =	70.70	BTU/lbm	164.4	J/g
8	Compressibility factor at reliving tempearture	Z =	0.87		0.87	
9	Molecular weight	M =	28.000		28.000	
10	Ratio of specific heats at standard conditions	γ =	1.40		1.40	
11	Coefficient C_1 at standard conditions	C =	356.1		356.1	
15	Correction factor (*CGA S-1.3*)	F =	1.00		1.00	
16	Gas factor for uninsulated containers (*CGA S-1.3*)	G_u =	69.0		69.0	
17	Required capacity of the relief valve *CGA S-1.3*	Q_{Air} =	939	SCFM Air	0.22	nm^3/hr Air
18	Required capacity of the relief valve	Q_{N2} =	955	SCFM N2	0.22	nm^3/hr He
19	Mass flow rate	m =	0.507	kg/s	0.507	kg/s
20	Effective coefficient of discharge *0.975 for reliefs, 0.62 for rupture disks*	K_d =	0.975		0.98	
21	Capacity correction factor	K_b =	1.00		1.00	
22	Combination correction factor (*API 520*)	K_c =	1.00		1.00	
23	Required RV area	A =	2.86E-01	in^2	1.85E-04	m^2
24	Minimal relief line size	d =	0.60	in	0.015	m

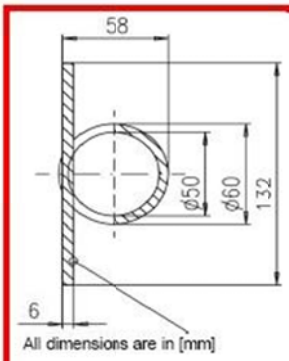

All dimensions are in [mm]

RELIEF VALVE SIZING

Fire Conditions

CM-1 80K Shield Return Circuit

Uninsulated container

Dim [mm]
OD = 60
ID = 50
Plate W = 132
Ins. Th = 25
Plate Th = 6
Length = 11,900

Authored by: A. Klebaner

Checked by: A. Martinez

Surface Area consists of the perimeter of the pipe times the length only. The plate section is considered part of the shield and does not significantly contribute during a relief event. Pipe is uninsulated.

			User Units	SI
1	Pipe length	H =	39.0 ft	11900.00 mm
2	Pipe outer diameter	O.D. =	2.36 in	60.00 mm
3	Surface area	S =	24.14 ft^2	2.24 m^2
4	Volume to be protected	V =	1.19 ft^3	0.03 m^3
5	Relieving pressure	P =	100 psia	689,473 Pa
6	Relieving temperature (*CGA S-1.3 Table 1 note*)	T_r =	-282.8 °F	98.45 K
7	Nitrogen latent heat	θ =	70.70 BTU/lbm	164.4 J/g
8	Compressibility factor at reliving tempearture	Z =	0.87	0.87
9	Molecular weight	M =	28.000	28.000
10	Ratio of specific heats at standard conditions	γ =	1.40	1.40
11	Coefficient C, at standard conditions	C =	356.1	356.1
15	Correction factor (*CGA S-1.3*)	F =	1.00	1.00
16	Gas factor for uninsulated containers (*CGA S-1.3*)	G_u =	69.0	69.0
17	Required capacity of the relief valve *CGA S-1.3*	Q_{Air} =	939 SCFM Air	0.22 nm^3/hr Air
18	Required capacity of the relief valve	Q_{N2} =	955 SCFM N2	0.22 nm^3/hr He
19	Mass flow rate	m =	0.507 kg/s	0.507 kg/s
20	Effective coefficient of discharge *0.975 for reliefs, 0.62 for rupture disks*	K_d =	0.975	0.98
21	Capacity correction factor	K_b =	1.00	1.00
22	Combination correction factor (*API 520*)	K_c =	1.00	1.00
23	Required RV area	A =	2.86E-01 in^2	1.85E-04 m^2
24	Minimal relief line size	d =	0.60 in	0.015 m

10/15/2010 Fire 80K Shield Return Unins Relief Valve Sizing NML Feedbox-Endcap2

APPENDIX A.5 – E. Zanon Inspection and Examination Reports

QUALITY CONTROL SERVICE — E. ZANON S.p.A.

MANUFACTURE'S DATA BOOK

Cliente Customer	DESY	Ordine N° P.O. No.	659 / 430630011
Commessa Mfr' work No	2870	Disegno Drawing	/
Apparecchio Equipment	Cryostats	N° Fabbrica Serial No.	10344
Sigla Item	Criomodule Type 3	PCQ N° QCP N.	/
Progetto Project	XFEL		

SECTION 2

Quality Control Plan 2870.F.002 and test report

Emesso da QCD Issued by QCD	Data Date	Verificato da QCM Verified by QCM	Data Date	Ispettore Inspector	Data Date

page 14

E. ZANON SPA
ECHIO ITALY

11

JOB	ST	DOC. No.	REV.	SHEET
2870	F	002	0	1/3

CLIENTE : DESY
CUSTOMER

ORDINE: 659 / 430630011
ORDER

PROGETTO: XFEL
PROJECT

DISEGNO : 2870.2. 001
DRAWING

COMPONENTE: CRYOSTATS
COMPONENT

N° FABBRICA: 10344[redacted]
WORKS No.

TITOLO: PIANO CONTROLLO QUALITA' PER "GheRP"

TITLE : QUALITY CONTROL PLAN FOR THE "GheRP"

PER LE ATTIVITA' IN DETTAGLIO VEDI CICLO DI PRODUZIONE INTERNO

FOR DETAILED ACTIVITIES SEE INTERNAL PRODUCTION CYCLE

0	EMISSIONE ISSUE	BERTOLONE	DAVSANTO	CORNIANI	26.06.06
REV.	DESCRIZIONE DESCRIPTION	REDATTO ISSUED BY	VERIFICATO REVIEWED BY	APPROVATO APPROVED BY	DATA DATE

page 15

E. ZANON SpA Schio Italy	QUALITY CONTROL PLAN PIANO CONTROLLO QUALITA'	H = Hold Point - Punto Fermo W = Witness - Convocazione R = Report - Rapporto	JOB	ST	DOC. No.	REV.	SHEET
			2870	F	002	0	2/3

Step Fase	Fabrication and control step Fase di fabbricazione e controllo	Specification Procedure - DWG Specifica Procedura - DIS	INSPECTION POINTS - PUNTI DI ISPEZIONE E. ZANON HWR / DATE / FIRM / SIGN	DESY HWR / DATE / FIRM / SIGN	HWR / DATE / FIRM / SIGN	HWR / DATE / FIRM / SIGN	CERTIFICATE	NON CONFORMITA DEROGATION	NOTE
1.	Controllo dei certificati di origine dei materiali. Review of the material mill certificate.	2870.2.001 2870.2.002 2870.2.003	H 15/12 06				Iri 55/06		
2.	Esecuzione delle saldature L1 - L2 - B21. Execution of the welds L1 - L2 - B21.	2870.2.001 2870.W.001	H 14/07 06						
3.	Controllo RX 100% delle saldature L1 - L2 - B21. 100% RT examination of the welds L1 - L2 - B21.	EZ 5013	H 19/07 06				Rx 192/06		
4.	Controllo dimensionale del tubo e tracciatura degli assi di riferimento. Tube dimensional check and reference axis marking.	2870.2.001	H 06/09 06						
5.	Esecuzione delle saldature W20÷W27. Execution of the welds W20÷W27.	2870.2.001 2870.W.001	H 22/09 06						
6.	Raddrizzatura e controllo dimensionale del tubo. Tube straigthening and dimensional check.	2870.2.001	H 26/09 06						
7.	Esecuzione delle saldature B22 - B23. Execution of the welds B22 - B23.	2870.2.003 2870.W.001	H 12/09 06						
8.	Controllo RX 100% delle saldature B22 - B23. 100% RT examination of the welds B22 - B23.	EZ 5013	H 28/09 06				Rx 194/06		

12

page 16

E. ZANON SpA Schio Italy	QUALITY CONTROL PLAN PIANO CONTROLLO QUALITA'	H = Hold Point - Punto Fermo W = Witness - Convocazione R = Report - Rapporto	JOB	ST	DOC. No.	REV.	SHEET
			2870	F	002	0	3/3

Step Fase	Fabrication and control step Fase di fabbricazione e controllo	Specification Procedure - DWG Specifica Procedura - DIS	INSPECTION POINTS - PUNTI DI ISPEZIONE E. ZANON HWR / DATE / FIRM / SIGN	DESY HWR / DATE / FIRM / SIGN	HWR / DATE / FIRM / SIGN	HWR / DATE / FIRM / SIGN	CERTIFICATE	NON CONFORMITA DEROGATION	NOTE
9.	Lavorazione meccanica dei piatti di supporto. Machining of the support plate.	2870.2.001	H 17/10 06						
10.	Prova pneumatica. Pneumatic test.	2870.S.005	H 23.10 2006				PT- 21/06		
11.	Prova di tenuta ad elio. Helium leak test.	2870.S.002	H 24.10 2006				TEN-47/06		
12.	Controllo dimensionale finale. Final dimensional check.	2870.2.001	H 21/12 06				CD 342/06		
13.	Pulizia. Cleaning.	2870.S.004	H 08/11 06						
14.	Controllo della documentazione finale. Final documentation review.		H 05/01 07						

13

page 17

QUALITY CONTROL SERVICE

E. ZANON S.p.A. 14

RAPPORTO DI CONTROLLO RADIOGRAFICO
RADIOGRAPHIC INSPECTION REPORT

Certificato N° / Report No. RX 192/06 — Pag. 1 di 4 / Page _ of _

Cliente / Customer	DESY	Ordine N° / P.O. No.	659 / 430630011
Commessa / Mfr work No	2870	Disegno / Drawing	2870.2.001
Apparecchio / Equipment	Cryostats	N° Fabbrica / Serial No.	10344
Sigla / Item	Criomodule Type 3	PCQ N° / QCP N.	2870.F.002 Step 3

Reference Specification	Quality level	Object-film distance	Material
E.Zanon No. 5013 rev.8	ASME VIII Div. 1 – UW 51	Contact	AISI 316L

Instrument used	Films	Screen lead	Penetrameter (IQI)
Gilardoni MT 350/6-12	Kodak T200	F = 0.05 mm B = 0.10 mm	10 FE EN

Source		Tension (Kv)	Current (mA)	Exposure time	Film processing
Rx X	Ry □	200	6	1'	Automatic

Sketch – Location marks:

100 % Examinations of welds L1 – L2 – B21 – B21B

Back scattered check: OK

Sketch of execution method

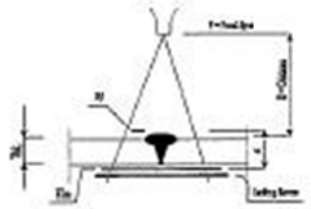

Performed by	Level	Test place	Date
Pieropan P.	1	Schio	18/07/06
Examined by	Level	Test place	
Dal Santo A.	II	Schio	19/07/06

Max Geometric unsharpness:

F X d / D = 3 x 6 / 700

Film per holder: 1 X 2 □

Viewing: Single X Double □

Accepted X | Non Accepted □ | Ref. To N.C. report No.

Issued by QCD	Lev.	Data	Verified by QCM	Lev.	Date
E. ZANON J. Saoni	1□ 2□ 3□	19/07/06	E. ZANON A. Dal Santo	2 3□	19.07.06

page 18

QUALITY CONTROL SERVICE

E. ZANON S.p.A. 15

RAPPORTO DI CONTROLLO RADIOGRAFICO
RADIOGRAPHIC INSPECTION REPORT

Certificato N° / Report No. RX 192/06 — Pag. 2 di 4 / Page _ of _

Cliente / Customer	DESY	Ordine N° / P.O. No.	659 / 430630011
Commessa / MV work No	2870	Disegno / Drawing	2870.2.001
Apparecchio / Equipment	Cryostats	N° Fabbrica / Serial No.	10344
Sigla / Item	Criomodule Type 3	PCQ N° / QCP N.	2870.F.002 Step 3

Reference specification	Quality level
E.Zanon No. 5013 rev.8	ASME VIII Div. 1 – UW 51

Film No.	Weld No.	Thickness (mm)	Welder	Film Size (cm)	Density	Sensitivity IQI	(A)	(B)	Remarks
1-2	L1	6	EZ 10	48x5	3,1	Ø0,16	1	/	NF10344
2-3	L1	6	EZ 10	48x5	3,0	Ø0,16	1	/	
3-4	L1	6	EZ 10	48x5	3,1	Ø0,16	1	/	
4-5	L1	6	EZ 10	48x5	3,2	Ø0,16	1	/	
5-6	L1	6	EZ 10	48x5	3,1	Ø0,16	1	/	
6-7	L1	6	EZ 10	48x5	3,3	Ø0,16	1	/	
7-8	L1	6	EZ 10	48x5	3,2	Ø0,16	1	/	
8-9	L1	6	EZ 10	48x5	3,2	Ø0,16	1	/	
9-10	L1	6	EZ 10	48x5	3,2	Ø0,16	1	/	
10-11	L1	6	EZ 10	48x5	3,2	Ø0,16	1	/	
11-12	L1	6	EZ 10	48x5	3,0	Ø0,16	1	/	
12-13	L1	6	EZ 10	48x5	3,0	Ø0,16	1	/	
13-14	L1	6	EZ 10	48x5	2,9	Ø0,16	1	/	
14-15	L1	6	EZ 10	48x5	2,9	Ø0,16	1	/	
15-16	L1	6	EZ 10	48x5	2,9	Ø0,16	1	/	

(A) Opinion	(B) Type of defect			
1=Optimum	As=porosity	Bc=slags weaving faults	C= lack of fusion	F=undercut
2=Good	Ab=worm holes	Bd= fault from bad chipping	D=incomplete penetration	K=shrinkage cavities
3=To the limit	Ba=slags inclusion	Be=fault at electrode change	IG=gas inclusion	V=shrinkage in root pass
4=To be repair	Bb=slags lines	Bf=fault at junction of seam	Em=longitudinal cracks	X=out of alignment
		IW=tungsten inclusion	Et=transverse cracks	H=metallic inclusion

Accettato / Accepted ☒ — Non Accettato / Not Accepted ☐ — Rapporto non conformità N° / Not conformity report No.

Emesso da QCD / Issued by QCD	Data / Date	Verificato da QCM / Verified by QCM	Data / Data	Ispettore / Inspector	Data / Date
E. ZANON L. Bassini	19/07/06	E. ZANON A. Del Santo	19.07.06		

page 19

QUALITY CONTROL SERVICE

E. ZANON S.p.A.

16

RAPPORTO DI CONTROLLO RADIOGRAFICO
RADIOGRAPHIC INSPECTION REPORT

Certificato N° / Report No. RX 192/06 — Pag. 3 di 4 / Page _ of _

Cliente / Customer	DESY	Ordine N° / P.O. No.	659 / 430630011
Commessa / Mfr' work No	2870	Disegno / Drawing	2870.2.001
Apparecchio / Equipment	Cryostats	N° Fabbrica / Serial No.	10344
Sigla / Item	Criomodule Type 3	PCQ N° / QCP N.	2870.F.002 Step 3

Reference specification	Quality level
E.Zanon No. 5013 rev.8	ASME VIII Div. 1 – UW 51

Film No.	Weld No.	Thickness (mm)	Welder	Film Size (cm)	Density	Sensitivity IQI	(A)	(B)	Remarks
1-2	L2	6	EZ 10	48x5	3,1	Ø0,16	1	/	NF 10344
2-3	L2	6	EZ 10	48x5	3,2	Ø0,16	1	/	
3-4	L2	6	EZ 10	48x5	3,2	Ø0,16	1	/	
4-5	L2	6	EZ 10	48x5	3,4	Ø0,16	1	/	
5-6	L2	6	EZ 10	48x5	3,3	Ø0,16	1	/	
6-7	L2	6	EZ 10	48x5	3,2	Ø0,16	1	/	
7-8	L2	6	EZ 10	48x5	3,3	Ø0,16	1	/	
8-9	L2	6	EZ 10	48x5	3,3	Ø0,16	1	/	
9-10	L2	6	EZ 10	48x5	3,3	Ø0,16	1	/	
10-11	L2	6	EZ 10	48x5	3,1	Ø0,16	1	/	
11-12	L2	6	EZ 10	48x5	3,3	Ø0,16	1	/	
12-13	L2	6	EZ 10	48x5	3,1	Ø0,16	1	/	
13-14	L2	6	EZ 10	48x5	3,1	Ø0,16	1	/	
14-15	L2	6	EZ 10	48x5	3,0	Ø0,16	1	/	
15-16	L2	6	EZ 10	48x5	2,9	Ø0,16	1	/	
1-2	L3	6	EZ 10	48x10	3,2	Ø0,16	1	/	

(A) Opinion	(B) Type of defect			
1=Optimum	Aa=porosity	Bc=slags weaving faults	C= lack of fusion	F=undercut
2=Good	Ab=worm holes	Bd= fault from bad chipping	D=incomplete penetration	K=shrinkage cavities
3=To the limit	Ba=slags inclusion	Be=fault at electrode change	IG=gas inclusion	V=shrinkage in root pass
4=To be repair	Bb=slags lines	Bf=fault at junction of seam	Es=longitudinal cracks	X=out of alignment
		IW=tungsten inclusion	Eb=transverse cracks	H=metallic inclusion

Accettato / Accepted ☒ — Non Accettato / Not Accepted ☐ — Rapporto non conformità N° / Not conformity report No.

Emesso da QCD / Issued by QCD	Data / Date	Verificato da QCM / Verified by QCM	Data / Date	Ispettore / Inspector	Data / Date
E. ZANON J. Bazoni	19/07/06	E. ZANON A. Del Santo	19.07.06		

page 20

QUALITY CONTROL SERVICE

E. ZANON S.p.A.

17

RAPPORTO DI CONTROLLO RADIOGRAFICO
RADIOGRAPHIC INSPECTION REPORT

Certificato N° / Report No.: RX 192/06 — Pag. 4 di 4 / Page _ of _

Cliente / Customer	DESY	Ordine N° / P.O. No.	659 / 430630011
Commessa / M° work No	1870	Disegno / Drawing	2870.2.001
Apparecchio / Equipment	Cryostats	N° Fabbrica / Serial No.	10344
Sigla / Item	Criomodule Type 3	PCQ N° / QCP N.	2870.F.002 Step 3

Reference specification	Quality level
E.Zanon No. 5013 rev.8	ASME VIII Div. 1 – UW 51

Film No.	Weld No.	Thickness (mm)	Welder	Film Size (cm)	Density	Sensitivity IQI	(A)	(B)	Remarks
1-2	B21	6	EZ 13	24x10	2,6	Ø0,16	1	/	NF 10344
2-3	B21	6	EZ 13	24x10	2,6	Ø0,16	1	/	
3-4	B21	6	EZ 13	24x10	2,3	Ø0,16	1	/	
4-5	B21	6	EZ 13	24x10	2,5	Ø0,16	1	/	
5-6	B21	6	EZ 13	24x10	2,9	Ø0,16	1	/	
6-1	B21	6	EZ 13	24x10	3,0	Ø0,16	1	/	
1-2	B21B	6	EZ 13	24x10	3,2	Ø0,16	2	F	
2-3	B21B	6	EZ 13	24x10	3,3	Ø0,16	2	F	
3-4	B21B	6	EZ 13	24x10	3,3	Ø0,16	1	/	
4-5	B21B	6	EZ 13	24x10	3,2	Ø0,16	1	/	
5-6	B21B	6	EZ 13	24x10	3,2	Ø0,16	1	/	
6-1	B21B	6	EZ 13	24x10	3,3	Ø0,16	1	/	

(A) Opinion	(B) Type of defect			
1=Optimum	An=porosity	Bs=slags weaving faults	C= lack of fusion	F=undercut
2=Good	Ah=worm holes	Bd= fault from bad chipping	D=incomplete penetration	K=shrinkage cavities
3=To the limit	Ba=slags inclusion	Be=fault at electrode change	IG=gas inclusion	V=shrinkage in root pass
4=To be repair	Bb=slags lines	Bf=fault at junction of seam	La=longitudinal cracks	X=out of alignement
		IW=tungsten inclusion	Lb=transverse cracks	H=metallic inclusion

Accettato / Accepted ☒ — Non Accettato / Not Accepted ☐ — Rapporto non conformità N° / Not conformity report No.

Emesso da QCD / Issued by QCD	Data / Date	Verificato da QCM / Verified by QCM	Data / Data	Ispettore / Inspector	Data / Date
E. ZANON M. Sartori	19/07/06	E. ZANON A. Dal Santo	19.07.06		

page 21

QUALITY CONTROL SERVICE

E. ZANON S.p.A.

18

RAPPORTO DI CONTROLLO RADIOGRAFICO
RADIOGRAPHIC INSPECTION REPORT

Certificato N° / Report No. RX 194/06 — Pag. 1 di 2 / Page _ of _

Cliente / Customer	DESY	Ordine N° / P.O. No.	659 / 430630011
Commessa / Mfr' work No	2870	Disegno / Drawing	2870.2.001
Apparecchio / Equipment	Cryostats	N° Fabbrica / Serial No.	10344
Sigla / Item	Criomodule Type 3	PCQ N° / QCP N.	2870.F.002 Step 8

Reference Specification	Quality level	Object-film distance	Material
E.Zanon No. 5013 rev.8	ASME VIII Div. 1 – UW 51	Contact	AISI 316L

Instrument used	Films	Screen lead	Penetrameter (IQI)
Gilardoni MT 350/6-12	Kodak T200	F = 0.05 mm B = 0.10 mm	10 FE EN

Source		Tension (Kv)	Current (mA)	Exposure time	Film processing
Rx X	Ry □	200	6	1'	Automatic

Sketch – Location marks:

100 % Examinations of welds B22 – B23

Back scattered check: OK

Sketch of execution method

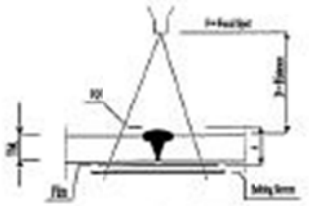

Performed by	Level	Test place	Date
Pierepan P.	I	Schio	27/09/06
Examined by	Level	Test place	
Dal Santo A.	II	Schio	28/09/06

Max Geometric unsharpness:

F X d / D = 3 x 6 / 700

Film per holder: 1 X 2 □

Viewing: Single X Double □

Accepted X | Non Accepted □ | Ref. To N.C. report No.

Issued by QCD	Lev.	Data	Verified by QCM	Lev.	Date
E. ZANON Esoni	1□ 2□ 3□	28/09/06	E. ZANON A. Dal Santo	2X 3□	28.09.06

page 22

QUALITY CONTROL SERVICE

E. ZANON S.p.A.

RAPPORTO DI CONTROLLO RADIOGRAFICO
RADIOGRAPHIC INSPECTION REPORT

Certificato N° / Report No. RX 194/06 — Pag. 2 di 2 / Page _ of _

Cliente / Customer	DESY	Ordine N° / P.O. No.	659 / 430630011
Commessa / My work No	2870	Disegno / Drawing	2870.2.001
Apparecchio / Equipment	Cryostats	N° Fabbrica / Serial No.	10344
Sigla / Item	Criomodule Type 3	PCQ N° / QCP N.	2870.F.002 Step 8

Reference specification	Quality level
E.Zanon No. 5013 rev.8	ASME VIII Div. 1 – UW 51

Film No.	Weld No.	Thickness (mm)	Welder	Film Size (cm)	Density	Sensitivity IQI	(A)	(B)	Remarks
1-2	B22	6	EZ 13	48x10	2,8	Ø0,16	1	/	
2-3	B22	6	EZ 13	48x10	2,7	Ø0,16	1	/	
3-4	B22	6	EZ 13	48x10	2,9	Ø0,16	1	/	
4-1	B22	6	EZ 13	48x10	2,8	Ø0,16	1	/	
1-2	B23	6	EZ 13	48x10	3,1	Ø0,16	1	/	
2-3	B23	6	EZ 13	48x10	2,6	Ø0,16	2	V	
3-4	B23	6	EZ 13	48x10	3,0	Ø0,16	1	/	
4-1	B23	6	EZ 13	48x10	2,9	Ø0,16	1	/	

(A) Opinion	(B) Type of defect			
1=Optimum	Aa=porosity	Bc=slags weaving faults	C= lack of fusion	F=undercut
2=Good	Ab=worm holes	Bd= fault from bad chipping	D=incomplete penetration	K=shrinkage cavities
3=To the limit	Ba=slags inclusion	Be=fault at electrode change	IG=gas inclusion	V=shrinkage in root pass
4=To be repair	Bb=slags lines	Bf=fault at junction of seam	Ea=longitudinal cracks	X=out of alignement
		IW=tungsten inclusion	Eb=transverse cracks	II=metallic inclusion

Accettato / Accepted ☒ — Non Accettato / Not Accepted ☐ — Rapporto non conformità N° / Not conformity report No.

Emesso da QCD / Issued by QCD	Data / Date	Verificato da QCM / Verified by QCM	Data / Data	Ispettore / Inspector	Data / Date
E. ZANON U. Burioni	28/09/06	E. ZANON A. Del Santo	28.09.06		

QUALITY CONTROL SERVICE

E. ZANON S.p.A.

CERTIFICATO DI PROVA PNEUMATICA
PNEUMATIC TEST REPORT

Certificato N° / Document No. PT - 21/08 — Pag 1 di 1 / Sheet 1 of 1

Cliente Customer DESY	**Ordine N°** P.O. No. 659/4306300111
Commessa Mfr' work No. 2870	**Disegno N°** Drawing No. 2870.01.01.00
Apparecchio Equipment CRIOSTAT	**N° Fabbrica** Serial No. 10344
Sigla Item CRY 3+	**PFC N°** QCP No. 2870.F.002 rev.0 step 10

Specifica di riferimento :
Reference Specification : E.ZANON No. 2870.S.005 rev.0 according to DWG No. 2870.2.001

Camera in pressione :
Part under pression : Inside pipe. GheRP TUBE

Capacita' :
Capacity : /

Pressione di prova :
Pressure test : 6 bar.

N° di matricola manometro impiegato :
Used manometer : EZ 117. (0 to 10 bar)

Liquido rivelatore impiegato :
Detector fluid employed : Nitrogen

Durata del mantenimento in pressione:
Pressure holding time : 30 minutes.

Esito della prova :
Result of the test : NESSUNA PERDITA O DEFORMAZIONE PERMANENTE E' STATA RISCONTRATA. / NO LEAK OR PERMANENT DEFORMATION WAS FOUND.

Accettato / Accepted	Non Accettato / Not Accepted	Rapporto non conformità N° / Not conformity report No.
☒	☐	----------

Emesso da QCD / Issued by QCD	Data / Date	Verificato da QCM / Verified by QCM	Data / Date	Ispettore / Inspector	Data / Date
E. ZANON	23.10.2006	E. ZANON	23.10.2006		

page 24

QUALITY CONTROL SERVICE

E. ZANON S.p.A.

21

MASS SPECTROMETER LEAK TESTING –Vacuum method-
PROVA DI TENUTA CON SPETTROMETRO DI MASSA –metodo a vuoto

Document No. TEN-47/06
Certificato N°
Sheet/pag 1 of/di 1

Customer : DESY Cliente :	P.O.No. 659/430630011 N° ordine :
Mfr's works No. 2870 Comm N° :	Drawing : 2870.1.001 disegno :
Equipment : CRIOSTAT Apparecchio :	Serial No. 10344 N° fabbrica :
Item : CRY 3+ Sigla :	QCP No. : 2870.F.002 rev.0 step 11 PFC N° :

Reference Specification : ASME V Art.10 App. V
Specifica di riferimento :

Mass spectrometer : "UL 200" by INFICON
Spettrometro di massa al He :

Auxiliary pumping group : turbomolecular pump 150/D60A by LEYBOLD
Gruppo di pompaggio ausiliario:

Vacuum gauge : combivac IT 230 D
Misuratore di vuoto :

Calibration leak (qa): 2,1x10E-9 mbar.l.s-1 Fuga calibrata	Building date : 26.03.2004 Data di costruzione:

Vacuum gauge position : farest point from leak detector
Posizione del misuratore di vuoto : punto più lontano dal cercafughe

Calibration leak position : farest point from leak detector
Posizione della fuga calibrata : punto più lontano dal cercafughe.

Allowable leak : ≤1 x 10 E-10 mbar.l.s-1
Perdita ammessa :

Test gas : He Gas di prova:	Concentration :C = ≥ 50% concentrazione :	Test temperature (to) = 15°C temperatura di prova :

Correction coefficients : for the temperature K2=0.035/°C – over the years K1=0.001/for year
Coefficienti di correzione : per la temperatura K2=0.035/°C – per anno di costruzione K1=0.001/anno

Calibration leak in testing conditions : qe = qo x (1-K1a) x [1+ K2 x(te-to)] = 1,51x10E-9 mbar.l.s-1
Fuga calibrata nelle condizioni di prova :

Vacuum in the vessel : < 1x10-3 mbar Vuoto nel serbatoio :	Vacuum in the analyzer : 1x10-6 mbar vuoto nel analizzatore :

Background signal in the mass spectrometer (n1) : 24 div. (scale 10x10-9)
Segnale di fondo allo spettrometro (n1) :

Signal with calibration leak in the farest point (n2) : 36 div. (scale 10x10-9)
Segnale con fuga calibrata aperta nel punto più lontano (n2):

Response time : 6'
tempo di risposta :

Sensitivity in the mass spectrometer : K= qe/(n2-n1) = 1,25x10-10 mbar.l.s-1/div.
Sensibilità dello spettrometro :

	time (minutes) Tempo (minuti)	Mass spectrometer indication (number of division – n) Segnale durante la prova (numero di divisioni)
n1	0	24 div. (scale 10 x 10 E-9)
n	30'	24 div. (scale 10 x 10 E-9)

Calculation of the leak : Q=(n –n1) x qe/(n2-n1) x 1/C =
Calcolo della perdita :

No leak greater than 2,51 x 10E-10 mbar.l.s-1 was found

Result of the test : satisfactory
Risultato della prova :

Remarks : tracer probe technique.
Note : tecnica con sonda tracciante.

Accepted/accettato ☒ | Not Accepted /non accettato ☐ | Ref. To N.C. report No. /non conformità N°

Issued by QCD Emesso da QCD	Date data	Reviewed by QCM verificato da QCM	Date data	
E. ZANON	24.10.2006	E. ZANON A. Dal Santo	24.10.2006	

page 25

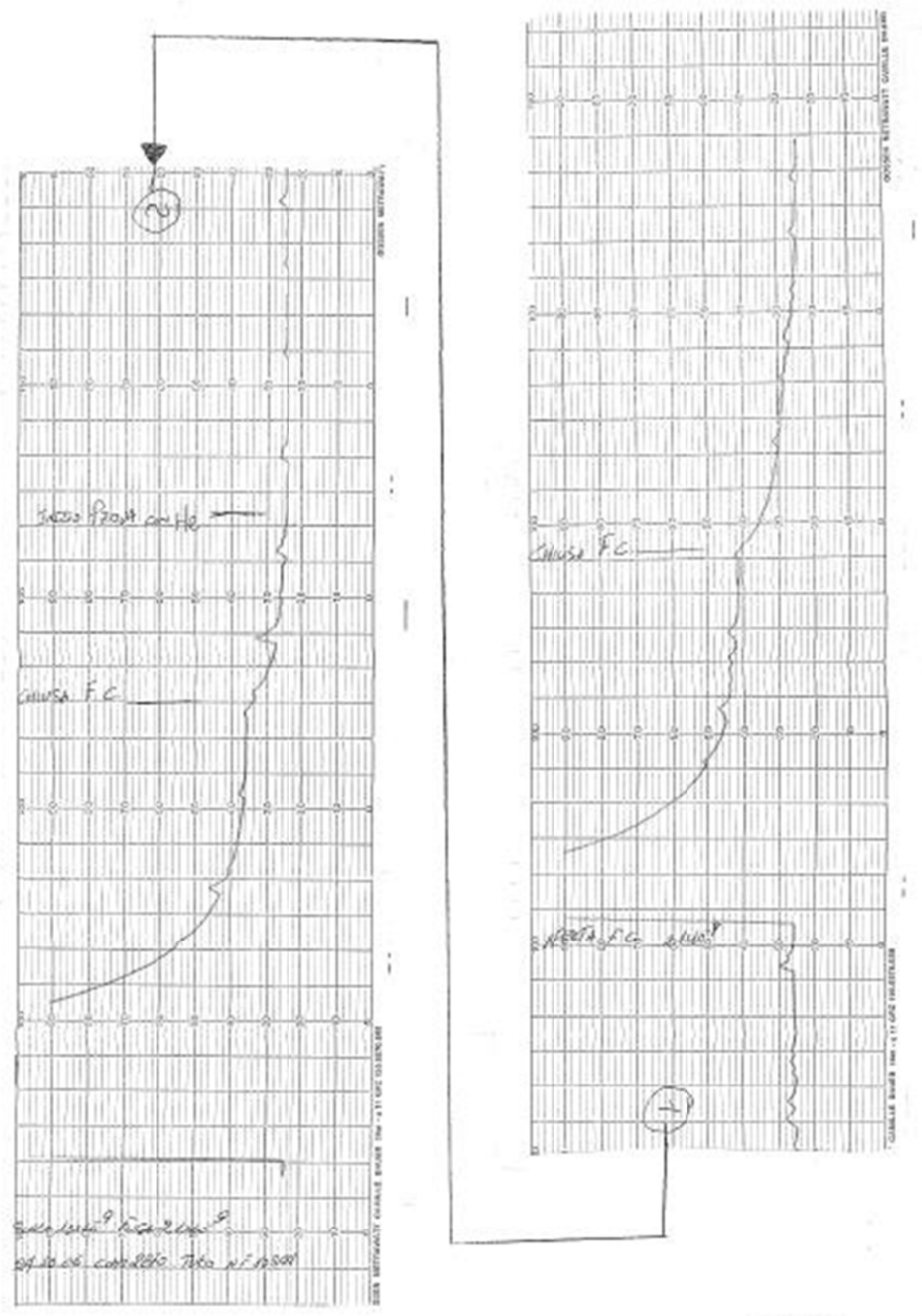

page 26

QUALITY CONTROL SERVICE

E. ZANON S.p.A.
23

CERTIFICATO DI CONTROLLO DIMENSIONALE
DIMENSIONAL CHECK REPORT

Certificato N° / Report No.: CD 392/06
Pag. 1 di 1 / Page _ of _

Cliente / Customer	DESY	Ordine N° / P.O. No.	659 / 430630011
Commessa / Mfr' work N°	2870	Disegno / Drawing	2870.2.001
Apparecchio / Equipment	Cryostats – GheRP	N° Fabbrica / Serial No.	10344
Sigla / Item	Criomodule Type 3	PCQ N° / QCP N.	2870.F.002 Step 12

Descrizione del materiale: / Material description: Final dimensional check

Specifica / Specification	Materiale / Material	Colata / Heat
Dwg. 2870.2.001	AISI 316L	/

Apparecchio di controllo: / Instrument used:
Meter EZ 444
Laser meter "Leica"
Flexible meter EZ 450

THE PIECES HAVE BEEN CHECKED

RESULT OF THE CHECK: Conforming to drawing in accordance to applicable tollerance

Accettato / Accepted	Non Accettato / Not Accepted	Rapporto non conformità N° / Not conformity report No.
☑	☐	

Emesso da QCD / Issued by QCD	Data / Date	Verificato da QCM / Verified by QCM	Data / Date	Ispettore / Inspector	Data / Date
	24/12/06	E. ZANON A. Del Santo	21.12.06		

page 27

QUALITY CONTROL SERVICE

E. ZANON S.p.A.
23

CERTIFICATO DI CONTROLLO DIMENSIONALE
DIMENSIONAL CHECK REPORT

Certificato N° / Report No.: CD 392/06

Pag. 1 di 1 / Page _ of _

Cliente / Customer	DESY	Ordine N° / P.O. No.	659 / 430630011
Commessa / Mfr' work N°	2870	Disegno / Drawing	2870.2.001
Apparecchio / Equipment	Cryostats – GheRP	N° Fabbrica / Serial No.	10344
Sigla / Item	Criomodule Type 3	PCQ N° / CCP N.	2870.F.002 Step 12

Descrizione del materiale: / Material description: Final dimensional check

Specifica / Specification	Materiale / Material	Colata / Heat
Dwg. 2870.2.001	AISI 316L	/

Apparecchio di controllo: / Instrument used:
- Meter EZ 444
- Laser meter "Leica"
- Flexible meter EZ 450

THE PIECES HAVE BEEN CHECKED

RESULT OF THE CHECK: Conforming to drawing in accordance to applicable tollerance

Accettato / Accepted	Non Accettato / Not Accepted	Rapporto non conformità N° / Not conformity report No.
☑	☐	

Emesso da QCD / Issued by QCD	Data / Date	Verificato da QCM / Verified by QCM	Data / Date	Ispettore / Inspector	Data / Date
	24/12/06	E. ZANON A. Del Santo	21.12.06		

E. ZANON SPA
SCHIO ITALY

24

JOB	ST	DOC. No.	REV.	SHEET
2870	F	003	0	1/7

CLIENTE : DESY
CUSTOMER

ORDINE: 659 / 430630011
ORDER

PROGETTO: XFEL
PROJECT

DISEGNO : 2870.3. 001 / 2870.4. 001 / 2870.5. 001 + 2870.5. 003
DRAWINGS

COMPONENTE: CRYOSTATS
COMPONENT

N° FABBRICA: 10344 [redacted]
WORKS No.

TITOLO: PIANO CONTROLLO QUALITA' PER:

TITLE : QUALITY CONTROL PLAN FOR:

- 4.5 °K COOLING PIPE - 70 °K COOLING PIPE (6060 T5)
- 70 °K COOLING PIPE - 1.8 & 4.5 °K COOLING PIPES (ASTM A 312 TP 316L)
- WARM-UP PIPE (ASTM A 312 TP 316L)

PER LE ATTIVITA' IN DETTAGLIO VEDI CICLO DI PRODUZIONE INTERNO

FOR DETAILED ACTIVITIES SEE INTERNAL PRODUCTION CYCLE

0	EMISSIONE ISSUE	BERTOLONE	DAL SANTO	CORNIANI	26.06.06
REV.	DESCRIZIONE DESCRIPTION	REDATTO ISSUED BY	VERIFICATO REVIEWED BY	APPROVATO APPROVED BY	DATA DATE

E. ZANON SpA Schio Italy	QUALITY CONTROL PLAN PIANO CONTROLLO QUALITA'	H = Hold Point - Punto Fermo W = Witness - Convocazione R = Report - Rapporto	JOB	ST	DOC. No.	REV.	SHEET
			2870	F	003	0	2/7

Step Fase	Fabrication and control step Fase di fabbricazione e controllo **4,5 °K COOLING PIPE - 70 °K COOLING PIPE**	Specification Procedure - DWG Specifica	INSPECTION POINTS - PUNTI DI ISPEZIONE E. ZANON		DESY						CERTIFICATE	NON CONFORMITA	NOTE
			HWR	DATE	HWR	DATE	HWR	DATE	HWR	DATE			
			FIRM	SIGN	FIRM	SIGN	FIRM	SIGN	FIRM	SIGN		DEROGATION	
1.	**(6060 T5)**	Procedura - DIS											
1.1.	Controllo dei certificati di origine dei materiali. Review of the material mill certificate.	2870.3.001 D 2870.4.001 D	CH	15/12 06							IM 56/06		
1.2.	Esecuzione delle saldature D31. Execution of the welds D31.	2870.3.001 2870.W.001	CH	20/10 06									
1.3.	Controllo LP 100% delle saldature D31. 100% PT examination of the welds D31.	EZ 5006	CH	30/10 06							LP 421/06		
1.4.	Esecuzione delle saldature B31÷B34 (dis. 2870.3.001) e B41÷B44 (dis. 2870.4.001). Execution of the welds B31÷B34 (dwg. 2870.3.001) and B41÷B44 (dwg. 2870.4.001).	2870.3.001 2870.4.001 2870.W.001	CH	23/10 06									
1.5.	Controllo RX 100% delle saldature B31÷B34 - B41÷B44. 100% RT examination of the welds B31÷B34 - B41÷B44.	EZ 5013	CH	22/11 06							RX 206/06 243/06		
1.6.	Controllo dimensionale. Dimensional check.	2870.3.001 2870.4.001	CH	21/12 06							CD 423/06		
1.5.	Prova pneumatica. Pneumatic test.	2870.S.005	CH	16/11 06							PT 33/06 35/06		
1.6.	Prova di tenuta ad elio. Helium leak test.	2870.S.003	CH	16/11 06							TEN 59/06 64/06		

25

E. ZANON SpA Schio Italy	QUALITY CONTROL PLAN PIANO CONTROLLO QUALITA'	H = Hold Point - Punto Fermo W = Witness - Convocazione R = Report - Rapporto	JOB	ST	DOC. No.	REV.	SHEET
			2870	F	003	0	3/7

Step Fase	Fabrication and control step Fase di fabbricazione e controllo **4,5 °K COOLING PIPE - 70 °K COOLING PIPE**	Specification Procedure - DWG Specifica Procedura - DIS	INSPECTION POINTS - PUNTI DI ISPEZIONE E. ZANON		DESY						CERTIFICATE	NON CONFORMITA	NOTE
			HWR FIRM	DATE SIGN	HWR FIRM	DATE SIGN	HWR FIRM	DATE SIGN	HWR FIRM	DATE SIGN		DEROGATION	
1.	**(6060 T5)**												
1.9.	Pulizia. Cleaning.	2870.S.004	R	18/12 06									
1.10.	Controllo della documentazione finale. Final documentation review.		H	05/01 07									

E. ZANON SpA Schio Italy	QUALITY CONTROL PLAN PIANO CONTROLLO QUALITA'	H = Hold Point - Punto Fermo W = Witness - Convocazione R = Report - Rapporto	JOB	ST	DOC. No.	REV.	SHEET
			2870	F	003	0	4/7

Step Fase 2.	Fabrication and control step Fase di fabbricazione e controllo **70 °K COOLING PIPE - 1,8 °K & 4,5 °K COOLING PIPES (ASTM A 312 TP 316L)**	Specification Procedure - DWG Specifica Procedura - DIS	INSPECTION POINTS - PUNTI DI ISPEZIONE: E. ZANON HWR FIRM	E. ZANON DATE SIGN	DESY HWR FIRM	DESY DATE SIGN	HWR FIRM	DATE SIGN	HWR FIRM	DATE SIGN	CERTIFICATE	NON CONFORMITA DEROGATION	NOTE
2.1.	Controllo dei certificati di origine dei materiali. Review of the material mill certificate.	2870.5.001 D 2870.5.002 D	H	15/12 06							IM 56/06		
2.2.	Esecuzione delle saldature D51 - D52. Execution of the welds D51 - D52.	2870.5.002 2870.W.001	H	15/12 06									
2.3.	Controllo LP 100% delle saldature D51 - D52. 100% PT examination of the welds D51 - D52.	EZ 5006	H	16/12 06							LP 452/06		
2.4.	Esecuzione delle saldature B51 (dis. 2870.5.001) e B52 - B53 (dis. 2870.5.002). Execution of the welds B51 (dwg. 2870.5.001) and B52 - B53 (dwgs. 2870.5.002).	2870.5.001 2870.5.002 2870.W.001	H	15/12 06									
2.5.	Controllo RX 100% delle saldature B51 - B52 - B53. 100% RT examination of the welds B51 - B52 - B53.	EZ 5013	H	17/12 06							RX 745/06		
2.6.	Controllo dimensionale. Dimensional check.	2870.5.001 2870.5.002	H	21/12 06							CD 123/06		
2.7.	Prova pneumatica. Pneumatic test.	2870.S.005	H	21/12 06							PT 25/06 27/06 29/06		
2.8.	Prova di tenuta ad elio tubi 70 °K (dis. 2870.5.001) ed 1,8 °K (dis. 2870.5.002 pos. 1). Helium leak test of pipes 70 °K (dwg 2870.5.001) and 1,8 °K (dwg 2870.5.002 pos. 1).	2870.S.003	H	21/12 06							TEN 51/06 53/06		

E. ZANON SpA Schio Italy	QUALITY CONTROL PLAN PIANO CONTROLLO QUALITA'	H = Hold Point - Punto Fermo W = Witness - Convocazione R = Report - Rapporto	JOB	ST	DOC. No.	REV.	SHEET
			2870	F	003	0	5/7

Step Fase 2.	Fabrication and control step Fase di fabbricazione e controllo **70 °K COOLING PIPE - 1,8 °K & 4,5 °K COOLING PIPES (ASTM A 312 TP 316L)**	Specification Procedure - DWG Specifica Procedura - DIS	INSPECTION POINTS - PUNTI DI ISPEZIONE E. ZANON HWR FIRM	E. ZANON DATE SIGN	DESY HWR FIRM	DESY DATE SIGN	HWR FIRM	DATE SIGN	HWR FIRM	DATE SIGN	CERTIFICATE	NON CONFORMITA DEROGATION	NOTE
2.9.	Prova di tenuta ad elio tubo 4,5 °K (dis. 2870.5.002 pos. 2). Helium leak test of pipe 4,5 °K (dwg 2870.5.002 pos. 2).	2870.S.002	H	20/11 06							TEN 53/06		
2.10.	Pulizia. Cleaning.	2870.S.004	H	18/12 06									
2.11.	Controllo della documentazione finale. Final documentation review.		H	05/01 07									

33

E. ZANON SpA Schio Italy	QUALITY CONTROL PLAN PIANO CONTROLLO QUALITA'	H = Hold Point - Punto Fermo W = Witness - Convocazione R = Report - Rapporto	JOB	ST	DOC. No.	REV.	SHEET
			2870	F	003	0	6/7

Step Fase	Fabrication and control step Fase di fabbricazione e controllo	Specification Procedure - DWG Specifica	INSPECTION POINTS - PUNTI DI ISPEZIONE E. ZANON		DESY						CERTIFICATE	NON CONFORMITA	NOTE
			HWR	DATE	HWR	DATE	HWR	DATE	HWR	DATE			
3.	**WARM-UP PIPE (ASTM A 312 TP 316L)**	Procedura - DIS	FIRM	SIGN	FIRM	SIGN	FIRM	SIGN	FIRM	SIGN		DEROGATION	
3.1.	Controllo dei certificati di origine dei materiali. Review of the material mill certificate.	2870.5. 003 D	H C	15/12 06							IM 56/06		
3.2.	Esecuzione delle saldature B55. Execution of the welds B55.	2870.5.003 2870.W.001	H C	18/12 06									
3.3.	Controllo RX 100% delle saldature B55. 100% RT examination of the welds B55.	EZ 5013	H	17/11 06							RX 247/06		
3.4.	Esecuzione delle saldature C51 - C52 - D53 - D54. Execution of the welds C51 - C52 - D53 - D54.	2870.5.003 2870.W.001	H	20/11 06									
3.5.	Controllo LP 100% delle saldature C51 - C52 - D53 - D54. 100% PT examination of the welds C51 - C52 - D53 - D54.	EZ 5006	H	23/11 06							LP 115/06 456/06		
3.6.	Controllo dimensionale. Dimensional check.	2870.5.003	H	24/12 06							CD 423/06		
3.7.	Prova pneumatica. Pneumatic test.	2870.S.005	H	20/11 06							PT 31/06		
3.8.	Prova di tenuta ad elio. Helium leak test.	2870.S.002	H	20/11 06							TEN 57/06		

E. ZANON SpA Schio Italy	QUALITY CONTROL PLAN PIANO CONTROLLO QUALITA'	H = Hold Point - Punto Fermo W = Witness - Convocazione R = Report - Rapporto	JOB	ST	DOC. No.	REV.	SHEET
			2870	F	003	0	7/7

Step Fase	Fabrication and control step Fase di fabbricazione e controllo	Specification Procedure - DWG Specifica Procedura - DIS	INSPECTION POINTS - PUNTI DI ISPEZIONE E. ZANON HWR FIRM	E. ZANON DATE SIGN	DESY HWR FIRM	DESY DATE SIGN	HWR FIRM	DATE SIGN	HWR FIRM	DATE SIGN	CERTIFICATE	NON CONFORMITA DEROGATION	NOTE
3.	**WARM-UP PIPE (ASTM A 312 TP 316L)**												
3.9.	Pulizia. Cleaning.	2870.S.004	H	18/12 06									
3.10.	Controllo della documentazione finale. Final documentation review.		H	05/01 07									

30

QUALITY CONTROL SERVICE

E. ZANON S.p.A.

31

LIQUID PENETRANT REPORT

Document N°: LP 421/06
Page 1 of 1

Customer	DESY	P.O. No.	659 / 430630011
Mfr's works No.	2870	Drawing	2870.3.001
Equipment	Cryostats	Serial N°	10344
Item	Criomodule Type 3	QCP N°.	2870.F.003 Step 1.3

Description of material: 100% Examination of weld D31

SURFACE CONDITION	As welded	Machined	Ground	Forged	Laminated
	X				

INSPECTION MATERIALS	X Water washable		□ Post emulsificable		□ Solvent removable	
	X Visible	□ Fluoresc.	□ Visible	□ Fluoresc.	□ Visible	□ Fluoresc.
Cleaner	Acetone					
Penetrant	Rotvel AvioB					
Emulsifier	/					
Remover	Water					
Developer	Rotrivel U					
Trade mark	C.C.M.					
Light wave lenght	/					

INSPECTION PROCEDURE

Cleaning: wiping with white rags and acetone
Penetrant application: by wet brush
Removal penetrant : wiping with white rags and water
Developer application: by spraying
Drying process: air < 50 psig
Penetrant min time: 15 minutes
Surfaces temperature: 18 °C
Developing min. time: 10 minutes

Checking time: 10 to 60 minutes	Performed by	Level	Test place	Date
Acceptance testing liquid: OK certificates	S. Loria	II	Schio	30/10/06
Cleaning after inspection: acetone	S. Loria	II	Schio	30/10/06

Result: **POSITIVE – No relevant indication was found**

Reference specification: E. Zanon No. 5006 rev. 5

X Accepted | Not Accepted | Ref. To N.C. report No.

Issued by QCD	Lev.	Date	Reviewed by QCM	Lev.	Date
E. ZANON L. Gasoni	1□ 2□ 3□	30/10/06	E. ZANON A. Del Santo	1□ 2X 3□	30-10-06

QUALITY CONTROL SERVICE

E. ZANON S.p.A.
32

RAPPORTO DI CONTROLLO RADIOGRAFICO
RADIOGRAPHIC INSPECTION REPORT

Certificato N° / Report No.: RX 205/06 | Pag. 1 di 2 / Page _ of _

Cliente / Customer	DESY	Ordine N° / P.O. No.	659 / 430630011
Commessa / Mfr' work No	2870	Disegno / Drawing	2870.3.001 2870.4.001
Apparecchio / Equipment	Cryostats	N° Fabbrica / Serial No.	10344
Sigla / Item	Criomodule Type 3	PCQ N° / QCP N.	2870.F.003 Step 1.5

Reference Specification	Quality level	Object-film distance	Material
E.Zanon No. 5013 rev.8	/	Contact	AL 6060 T5

Instrument used	Films	Screen lead	Penetrameter (IQI)
Gilardoni MT 350/6-12	Kodak MX125	F = 0.05 mm B = 0.10 mm	10 AL EN

Source		Tension (Kv)	Current (mA)	Exposure time	Film processing
Rx X	Ry □	130	3	20"	Automatic

Skecth – Location marks:

100 % Examinations of welds B31 – B32 – B41 – B42

Back scattered check:

Sketch of execution method

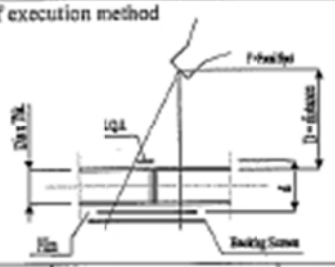

Performed by	Level	Test place	Date
Pieropan P.	I	Schio	11/10/06
Examined by	Level	Test place	
Dal Santo A.	II	Schio	12/10/06

Max Geometric unsharpness:

F X d / D = 3 x 60 / 700 = 0,26

Film per holder: 1 X 2 □

Viewing: Single □ Double X

Accepted X | Non Accepted □ | Ref. To N.C. report No.

Issued by QCD	Lev.	Data	Verified by QCM	Lev.	Date
E. ZANON Zanoni	1□ 2□ 3□	12/10/06	E. ZANON A. Dal Santo	2X 3□	13.10.06

QUALITY CONTROL SERVICE

E. ZANON S.p.A.
33

RAPPORTO DI CONTROLLO RADIOGRAFICO
RADIOGRAPHIC INSPECTION REPORT

Certificato N° / Report No.: RX 205/06 — Pag. 2 di 2 / Page _ of _

Cliente / Customer	DESY	Ordine N° / P.O. No.	659 / 4306300011
Commessa / Mfr' work No	2870	Disegno / Drawing	2870.3.001 2870.4.001
Apparecchio / Equipment	Cryostats	N° Fabbrica / Serial No.	10344
Sigla / Item	Criomodule Type 3	PCQ N° / QCP N.	2870.F.003 Step 1.5

Reference specification	Quality level
E.Zanon No. 5013 rev.8	ASME VIII Div. 1 – UW 51

Film No.	Weld No.	Thickness (mm)	Welder	Film Size (cm)	Density	Sensitivity IQI	(A)	(B)	Remarks
A	B31	5	EZ 43	24x10	3,7	Ø0,20	1	/	
B	B31	5	EZ 43	24x10	3,5	Ø0,20	1	/	
A	B32	5	EZ 43	24x10	3,4	Ø0,20	1	/	
B	B32	5	EZ 43	24x10	3,4	Ø0,20	1	/	
A	B41	5	EZ 43	24x10	3,4	Ø0,20	1	/	
B	B41	5	EZ 43	24x10	3,5	Ø0,20	1	/	
A	B42	5	EZ 43	24x10	3,2	Ø0,20	2	Aa	
B	B42	5	EZ 43	24x10	3,3	Ø0,20	2	Aa	

(A) Opinion	(B) Type of defect			
1=Optimum	Aa=porosity	Ba=slags weaving faults	C= lack of fusion	F=undercut
2=Good	Ab=worm holes	Bd= fault from bad chipping	D=incomplete penetration	K=shrinkage cavities
3=To the limit	Ba=slags inclusion	Be=fault at electrode change	IG=gas inclusion	V=shrinkage in root pass
4=To be repair	Bb=slags lines	Bf=fault at junction of seam	Ea=longitudinal cracks	X=out of alignement
		IW=tungsten inclusion	Eb=transverse cracks	H=metallic inclusion

Accettato / Accepted ☒ — Non Accettato / Not Accepted ☐ — Rapporto non conformità N° / Not conformity report No.

Emesso da QCD / Issued by QCD	Data / Date	Verificato da QCM / Verified by QCM	Data / Date	Ispettore / Inspector	Data / Date
E. ZANON J. Sezani	12/10/06	E. ZANON A. Dal Santo	13-10-06		

QUALITY CONTROL SERVICE

E. ZANON S.p.A.

34

RAPPORTO DI CONTROLLO RADIOGRAFICO

RADIOGRAPHIC INSPECTION REPORT

Certificato N° / Report No.: RX 243/06 — Pag. 1 di 2 / Page _ of _

Cliente / Customer	DESY	Ordine N° / P.O. No.	659 / 430630011
Commessa / Mfr' work No	2870	Disegno / Drawing	2870.3.001 2870.4.001
Apparecchio / Equipment	Cryostats	N° Fabbrica / Serial No.	10344
Sigla / Item	Criomodule Type 3	PCQ N° / QCP N.	2870.F.003 Step 1.5

Reference Specification	Quality level	Object-film distance	Material
E.Zanon No. 5013 rev.8	/	Contact	AISI 316L

Instrument used	Films	Screen lead	Penetrameter (IQI)
Gilardoni MT 350/6-12	Kodak MX125	F = 0.05 mm B = 0.10 mm	10 FE EN

Source		Tension (Kv)	Current (mA)	Exposure time	Film processing
Rx X	Ry □	160	4	25"	Automatic

Sketch – Location marks:

100 % Examinations of welds B33 – B34 – B43 – B44

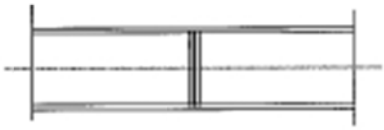

Back scattered check :

Sketch of execution method

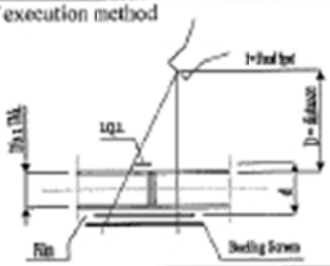

Performed by	Level	Test place	Date
Pieropan P.	I	Schio	Varius
Examined by	Level	Test place	
Dal Santo A.	II	Schio	14/11/06

Max Geometric unsharpness:

F X d / D = 3 x 60 / 700 = 0,26

Film per holder: 1 X 2 □

Viewing: Single □ Double X

Accepted X | Non Accepted □ | Ref. To N.C. report No.

Issued by QCD	Lev.	Data	Verified by QCM	Lev.	Date
E. ZANON Lissoni	1□ 2□ 3□	22/11/06	E. ZANON A. Dal Santo	2X 3□	22-11-06

QUALITY CONTROL SERVICE

E. ZANON S.p.A.

35

RAPPORTO DI CONTROLLO RADIOGRAFICO

RADIOGRAPHIC INSPECTION REPORT

Certificato N° / Report No.: RX 243/06 — Pag. 2 di 2 / Page _ of _

Cliente / Customer	DESY	Ordine N° / P.O. No.	659 / 4306300111
Commessa / Mfr work No	2870	Disegno / Drawing	2870.3.001 2870.4.001
Apparecchio / Equipment	Cryostats	N° Fabbrica / Serial No.	10344
Sigla / Item	Criomodule Type 3	PCQ N° / QCP N.	2870.F.003 Step 1.5

Reference specification	Quality level
E.Zanon No. 5013 rev.8	ASME VIII Div. 1 – UW 51

Film No.	Weld No.	Thickness (mm)	Welder	Film Size (cm)	Density	Sensitivity IQI	(A)	(B)	Remarks
A	B33	2,77	EZ 43	24x10	3,5	Ø0,16	1	/	
B	B33	2,77	EZ 43	24x10	3,3	Ø0,16	1	/	
A	B34	2,77	EZ 43	24x10	3,6	Ø0,16	1	/	
B	B34	2,77	EZ 43	24x10	3,5	Ø0,16	1	/	
A	B43	2,77	EZ 43	24x10	3,8	Ø0,16	1	/	
B	B43	2,77	EZ 43	24x10	3,9	Ø0,16	1	/	
A	B44	2,77	EZ 43	24x10	3,7	Ø0,16	1	/	
B	B44	2,77	EZ 43	24x10	3,6	Ø0,16	1	/	

(A) Opinion	(B) Type of defect				
1=Optimum	A=porosity	Bc=slags weaving faults	C= lack of fusion	F=undercut	
2=Good	Ab=worm holes	Bd= fault from bad chipping	D=incomplete penetration	K=shrinkage cavities	
3=To the limit	Ba=slags inclusion	Be=fault at electrode change	IG=gas inclusion	V=shrinkage in root pass	
4=To be repair	Bb=slags lines	Bf=fault at junction of seam	Ea=longitudinal cracks	X=out of alignment	
		IW=tungsten inclusion	Eb=transverse cracks	H=metallic inclusion	

Accettato / Accepted ☒ — Non Accettato / Not Accepted ☐ — Rapporto non conformità N° / Not conformity report No.

Emesso da QCD / Issued by QCD	Data / Date	Verificato da QCM / Verified by QCM	Data / Data	Ispettore / Inspector	Data / Date
E. ZANON U. Bazoni	22/11/06	E. ZANON A. Dal Santo	22-11-06		

QUALITY CONTROL SERVICE

E. ZANON S.p.A.

36

CERTIFICATO DI PROVA PNEUMATICA
PNEUMATIC TEST REPORT

Certificato N° / Document No. PT 33/06 — Pag 1 di 1 / Sheet 1 of 1

Cliente Customer DESY	**Ordine N°** P.O. No. 659/430630011
Commessa Mf' work No. 2870	**Disegno N°** Drawing No. 2870.01.01.00
Apparecchio Equipment CRIOSTAT	**N° Fabbrica** Serial No. 10344
Sigla Item CRY 3+	**PFC N°** QCP No. 2870.F.003 rev.0 step 1.5

Specifica di riferimento :
Reference Specification : E.ZANON No. 2870.S.005 rev.0 according to DWG No. 2870.3.001 rev.0

Camera in pressione :
Part under pression : Inside pipe.4.5°K shield

Capacita' :
Capacity : /

Pressione di prova :
Pressure test : 20 bar.

N° di matricola manometro impiegato :
Used manometer : EZ 474. (0 to 60 bar)

Liquido rivelatore impiegato :
Detector fluid employed : Nitrogen

Durata del mantenimento in pressione:
Pressure holding time : 30 minutes.

Esito della prova : NESSUNA PERDITA O DEFORMAZIONE PERMANENTE E' STATA RISCONTRATA.
Result of the test : NO LEAK OR PERMANENT DEFORMATION WAS FOUND.

Accettato / Accepted	Non Accettato / Not Accepted	Rapporto non conformità N° / Not conformity report No.
☒	☐	----------

Emesso da QCD / Issued by QCD	Data / Date	Verificato da QCM / Verified by QCM	Data / Date	Ispettore / Inspector	Data / Date
E. ZANON L'Addetto Collaudo	16.11.2006	E. ZANON A. Dal Santo	16.11.2006		

QUALITY CONTROL SERVICE

E. ZANON S.p.A. 37

MASS SPECTROMETER LEAK TESTING
– Vacuum pressure method –

Document No. TEN 59/06
Sheet 1 Of 1

Customer DESY	P.O.No. 659/430630011
Mfr's works No. 2870	Drawing 2870.01.01.00
Equipment CRIOSTAT	Serial No. 10344
Item CRY 3+	QCP No. 2870.F.003 rev.0 step 1.6

Reference Specification : E. ZANON No. 2870.S.003 rev.0

Mass spectrometer : UL 200 by Inficon (Leybold)

Auxiliary pumping group : Turbomolecular TURBOVAC1500l/sec – trivac D60A Leybold

Vacuum gauge :Combivac IT 230D Leybold

Calibration leak (qo):cat.14408 TL9 qo=2,1x10E-9 mbar.l.s-1 | Building date : 26.03.2004

Vacuum gauge position : farest poin: from leak detector

Calibration leak position : farest point from leak detector

Allowable leak : ≤1 x 10 E-10 mbar.l.s-1

Test gas : He	Pressure He test :19 bar	Concentration :C ≥ 95%	Test temperature (te)=15 °C

Correction coefficients : for the temperature K2=0.035/°C – over the years K1=0.001/for year

Calibration leak in testing conditions : qe = qo x (1-K1a) x [1+ K2 x(te-to)] = 1,51x 10 E-9 mbar.l.s-1

Vacuum in the vessel : 4.0 x 10 E-5 mbar | Vacuum in the analyzer : 1 x 10 E-6 mbar

Background signal in the mass spectrometer (n1) : 1 div. (scale 10 x 10-9)

Signal with calibration leak in the farest point (n2) : 10 div. (scale 10 x 10-9)

Response time : 2'

Sensitivity in the mass spectrometer : qe/(n2-n1) =1,51 x 10E-9/(10-1)= 1,68 x 10E-10 mbar.l.s-1/div.

	time (minutes)	Mass spectrometer indication (number of division)
n1	0	1 div. (scale 10 x 10 E-9)
n	30'	1 div. (scale 10 x 10 E-9)

CALCULATION OF THE TOTAL LEAK : Q=(n –n1) x qe/(n2-n1) x 1/C x 1/P2-P1 =
No leak greater than 8,84 x 10E-12 mbar.l.s-1 was found.

Result of the test : satisfactory

Remarks : 4,5°K shield pipe acc.to dwg No.2870.3.001 rev.0

Accepted ■ Not Accepted □ Ref. To N.C. report No.

Issued by QCD	Date	Reviewed by QCM	Date	
E. ZANON	16.11.2006	E. ZANON	16.11.2006	

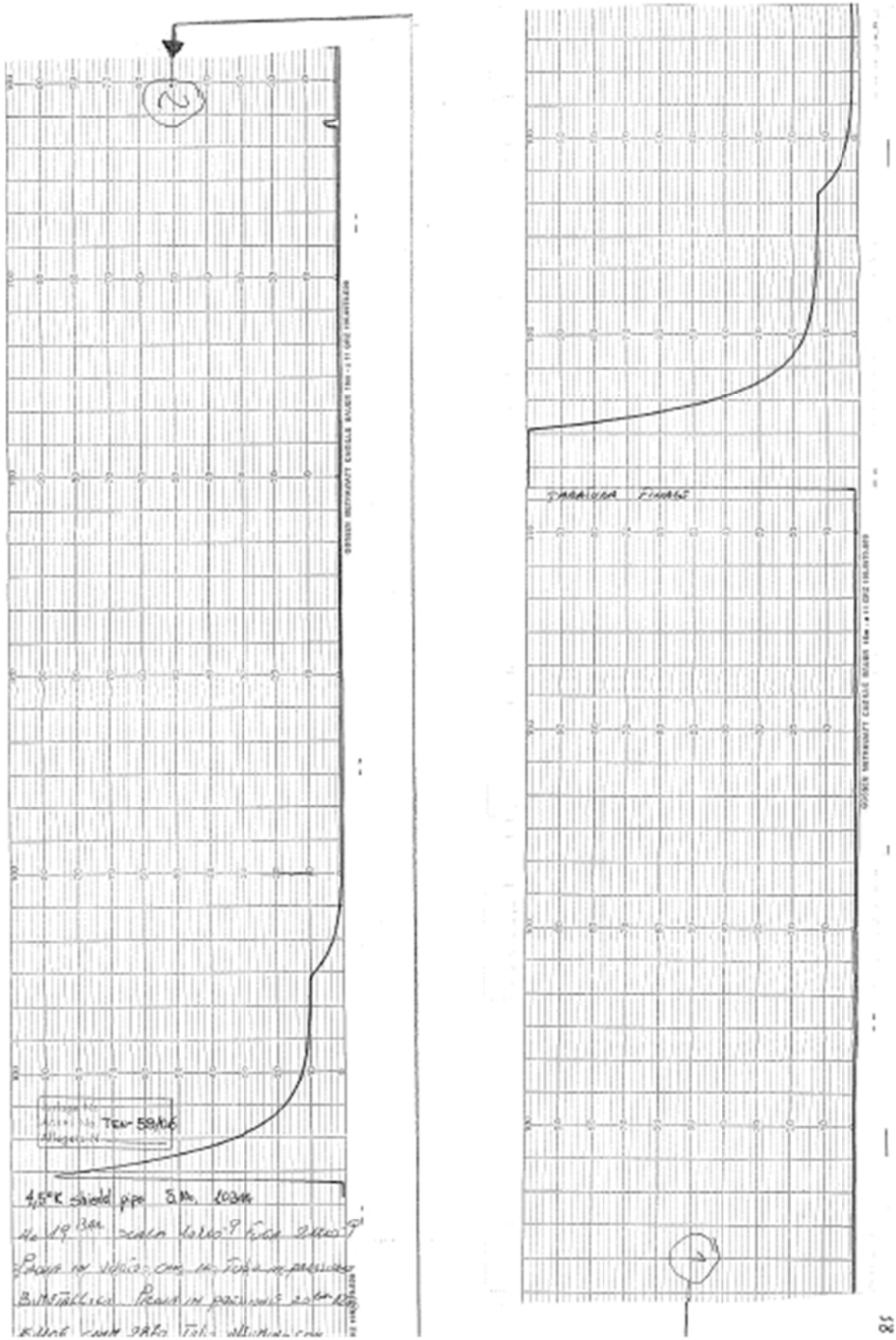
TEN-59/06
4,5°K shield pipe

QUALITY CONTROL SERVICE

E. ZANON S.p.A.

CERTIFICATO DI PROVA PNEUMATICA
PNEUMATIC TEST REPORT

Certificate N° / Document No. PT - 35/06 — Pag 1 di 1 / Sheet 1 of 1

Cliente Customer DESY	**Ordine N°** P.O. No. 659/430630011
Commessa Mfr' work No. 2870	**Disegno N°** Drawing No. 2870.01.01.00
Apparecchio Equipment CRIOSTAT	**N° Fabbrica** Serial No . 10344
Sigla Item CRY 3+	**PFC N°** QCP No . 2870.F.003 rev.0 step 1.5

Specifica di riferimento :
Reference Specification : E.ZANON No. 2870.S.005 rev.0 according to DWG No. 2870.4.001 rev.0

Camera in pressione :
Part under pression : Inside pipe.70°K shield

Capacita' :
Capacity : /

Pressione di prova :
Pressure test : 20 bar .

N° di matricola manometro impiegato :
Used manometer : EZ 474. (0 to 60 bar)

Liquido rivelatore impiegato :
Detector fluid employed : Nitrogen

Durata del mantenimento in pressione:
Pressure holding time : 30 minutes .

Esito della prova :
Result of the test : NESSUNA PERDITA O DEFORMAZIONE PERMANENTE E' STATA RISCONTRATA . / NO LEAK OR PERMANENT DEFORMATION WAS FOUND .

Accettato / Accepted	Non Accettato / Not Accepted	Rapporto non conformità N° / Not conformity report No.
☒	☐	----------

Emesso da QCD / Issued by QCD	Data / Date	Verificato da QCM / Verified by QCM	Data / Date	Ispettore / Inspector	Data / Date
E. ZANON L. Magli	16.11.2006	E. ZANON A. Dal Santo	16.11.2006		

QUALITY CONTROL SERVICE

E. ZANON s.p.A.

40

MASS SPECTROMETER LEAK TESTING
– Vacuum pressure method –

Document No. TEN 61/06
Sheet 1 Of 1

Customer DESY	P.O.No. 659/430630011
Mfr's works No. 2870	Drawing 2870.01.01.00
Equipment CRIOSTAT	Serial No. 10344
Item CRY 3+	QCP No. 2870.F.003 rev.0 step 1.6

Reference Specification : E. ZANON No. 2870.S.003 rev.0

Mass spectrometer : UL 200 by Inficon (Leybold)

Auxiliary pumping group : Turbomolecular TURBOVAC1500l/sec – trivac D60A Leybold

Vacuum gauge :Combivac IT 230D Leybold

Calbration leak (qo):cat.14408 TL9 qo=2,1x10E-9 mbar.l.s-1 | Building date : 26.03.2004

Vacuum gauge position : farest point from leak detector

Calibration leak position : farest point from leak detector

Allowable leak : ≤1 x 10 E-10 mbar.l.s-1

Test gas : He	Pressure He test :19 bar	Concentration :C ≥ 95%	Test temperature (te)=15 °C

Correction coefficients : for the temperature K2=0.035/°C – over the years K1=0.001/for year

Calibration leak in testing conditions : qe = qo x (1-K1a) x [1+ K2 x(te-to)] = 1,51x 10 E-9 mbar.l.s-1

Vacuum in the vessel : 4.0 x 10 E-5 mbar | Vacuum in the analyzer : 1 x 10 E-6 mbar

Background signal in the mass spectrometer (n1) : 1 div. (scale 10 x 10-9)

Signal with calbration leak in the farest point (n2) : 12 div. (scale 10 x 10-9)

Reesponse time : 2'

Sensitivity in the mass spectrometer : qe/(n2-n1) =1,51 x 10E-9/(12-1)= 1,37 x 10E-10 mbar.l.s-1/div.

	time (minutes)	Mass spectrometer indication (number of division)
n1	0	1 div. (scale 10 x 10 E-9)
n	30'	1 div. (scale 10 x 10 E-9)

CALCULATION OF THE TOTAL LEAK : Q=(n –n1) x qe/(n2-n1) x 1/C x 1/P2-P1 =
No leak greater than 7,22 x 10E-12 mbar.l.s-1 was found.

Result of the test : satisfactory

Remarks : 70°K shield pipe acc.to dwg No.2870.4.001 rev.0

Accepted ■ | Not Accepted □ | Ref. To N.C. report No.

Issued by QCD	Date	Reviewed by QCM	Date
E. ZANON L. Fedeli	16.11.2006	E. ZANON A. De Bortoli	16.11.2006

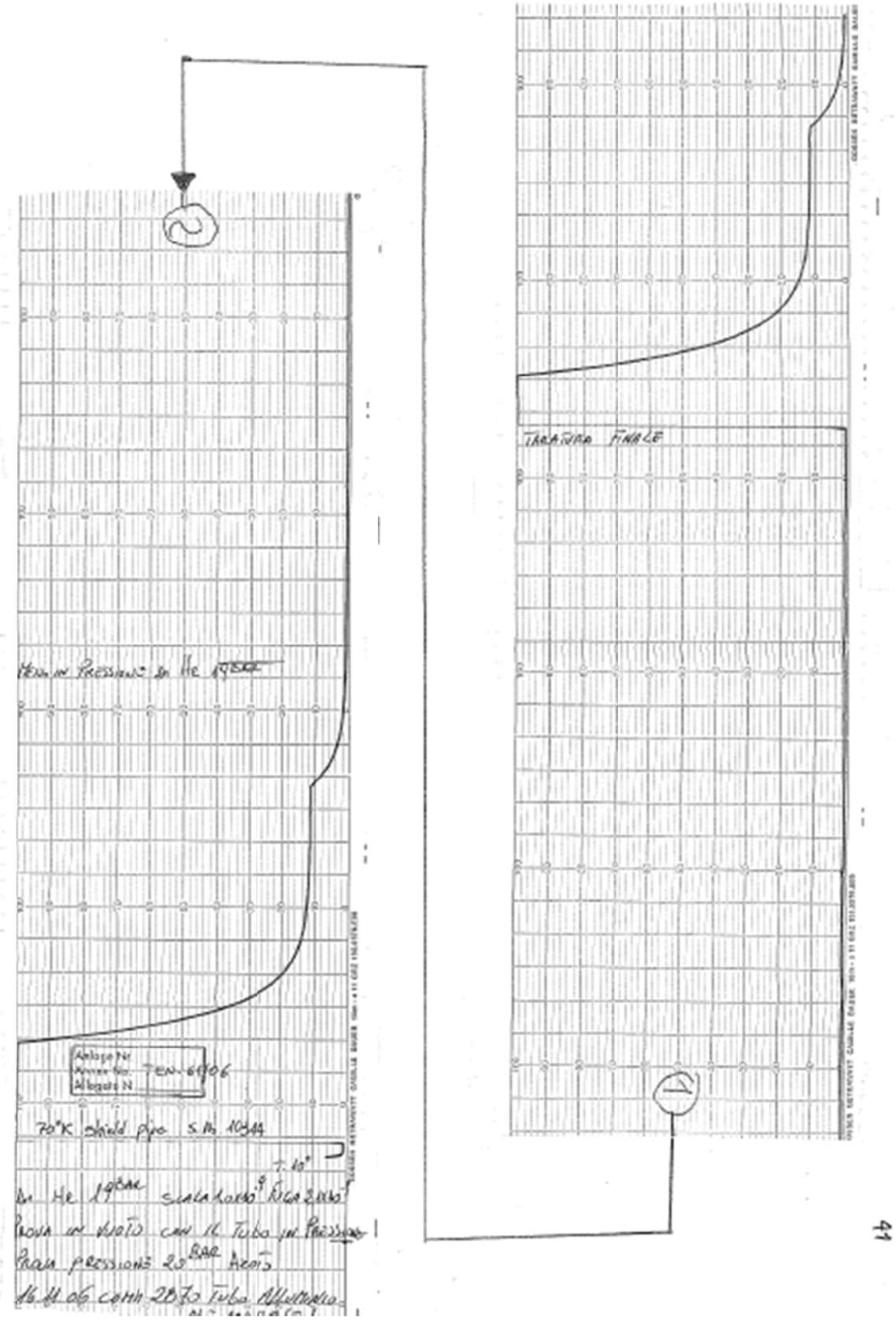
TARATURA FINALE
Analogo Nr.
Annex No.
Allegato N.
TEN-61/06
70°K shield pipe S.M. 10344
T. 10°
Prova in vuoto con il Tubo in Pressione
Prova pressione 20 BAR Azoto
16.11.06 comm 2870 Tubo Alluminio

41

QUALITY CONTROL SERVICE

E. ZANON S.p.A.

42

LIQUID PENETRANT REPORT

Document N°: LP 452/06
Page 1 of 1

Customer	DESY	P.O. No.	659 / 430630011
Mfr's works No.	2870	Drawing	2870.5.002
Equipment	Cryostats	Serial N°	10344
Item	Criomodule Type 3	QCP N°.	2870.F.003 Step 2.3

Description of material: 100% Examination of welds D51 and D52

SURFACE CONDITION	As welded	Machined	Ground	Forged	Laminated
	X				

INSPECTION MATERIALS	X Water washable		□ Post emulsificable		□ Solvent removable	
	X Visible	□ Fluoresc.	□ Visible	□ Fluoresc.	□ Visible	□ Fluoresc.
Cleaner	Acetone					
Penetrant	Rotvel AvioB					
Emulsifier	/					
Remover	Water					
Developer	Rotrivel U					
Trade mark	C.G.M.					
Light wave lenght	/					

INSPECTION PROCEDURE

Cleaning: wiping with white rags and acetone
Penetrant application: by wet brush
Removal penetrant : wiping with white rags and water
Developer application: by spraying

Drying process: air < 50 psig
Penetrant min time: 15 minutes
Surfaces temperature: 18 °C
Developing min. time: 10 minutes

	Performed by	Level	Test place	Date
Checking time: 10 to 60 minutes				
Acceptance testing liquid: OK certificates	A. Dal Santo	II	Schio	16/11/06
Cleaning after inspection: acetone	S. Loria	II	Schio	16/11/06

Result: **POSITIVE – No relevant indication was found**

Reference specification: E. Zanon No. 5006 rev. 5

X Accepted | Not Accepted | Ref. To N.C. report No.

Issued by QCD	Lev.	Date	Reviewed by QCM	Lev.	Date
E. ZANON S. Zanella	1□ 2□ 3□	16/11/06	E. ZANON A. Dal Santo	1□ 2X 3□	16-11-06

QUALITY CONTROL SERVICE

E. ZANON S.p.A.
43

RAPPORTO DI CONTROLLO RADIOGRAFICO
RADIOGRAPHIC INSPECTION REPORT

Certificato N° / Report No.: RX 245/06
Pag. 1 di 2 / Page _ of _

Cliente / Customer	DESY	Ordine N° / P.O. No.	659 / 430630011
Commessa / Mf° work No	2870	Disegno / Drawing	2870.5.001 2870.5.002
Apparecchio / Equipment	Cryostats	N° Fabbrica / Serial No.	10344
Sigla / Item	Criomodule Type 3	PCQ N° / QCP N.	2870.F.003 Step 2.5

Reference Specification	Quality level	Object-film distance	Material
E.Zanon No. 5013 rev.8	/	Contact	AISI 316L

Instrument used	Films	Screen lead	Penetrameter (IQI)
Gilardoni MT 350/6-12	Kodak MX125	F = 0.05 mm B = 0.10 mm	10 FE EN

Source		Tension (Kv)	Current (mA)	Exposure time	Film processing
Rx X	Ry □	160	4	25"	Automatic

Skeeth – Location marks:

100 % Examinations of welds B51-B52-B53

Back scattered check :

Sketch of execution method

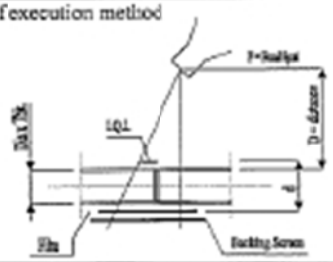

Performed by	Level	Test place	Date
Pieropan P.	I	Schio	Varius
Examined by	Level	Test place	
Dal Santo A.	II	Schio	17/11/06

Max Geometric unsharpness:

F X d / D = 3 x 60 / 700 = 0,26

Film per holder: 1 X 2 □

Viewing: Single □ Double X

Accepted X | Non Accepted □ | Ref. To N.C. report No.

Issued by QCD	Lev.	Data	Verified by QCM	Lev.	Date
E. ZANON J. Gilardoni	1□ 2□ 3□	22/11/06	E. ZANON A. Dal Santo	2X 3□	22-11-06

QUALITY CONTROL SERVICE

E. ZANON S.p.A.

RAPPORTO DI CONTROLLO RADIOGRAFICO
RADIOGRAPHIC INSPECTION REPORT

Certificato N° / Report No.: RX 245/06 — Pag. 2 di 2 / Page _ of _

Cliente / Customer	DESY	Ordine N° / P.O. No.	659 / 430630011
Commessa / Mfr' work No	2870	Disegno / Drawing	2870.5.001 2870.5.002
Apparecchio / Equipment	Cryostats	N° Fabbrica / Serial No.	10344
Sigla / Item	Criomodule Type 3	PCQ N° / QCP N.	2870.F.003 Step 2.5

Reference specification	Quality level
E.Zanon No. 5013 rev.8	ASME VIII Div. 1 – UW 51

Film No.	Weld No.	Thickness (mm)	Welder	Film Size (cm)	Density	Sensitivity IQI	(A)	(B)	Remarks
A	B51	2,77	EZ 43	24x10	3,8	Ø0,16	1	/	
B	B51	2,77	EZ 43	24x10	4,0	Ø0,16	1	/	
A	B52	1,65	EZ 43	24x10	3,8	Ø0,16	1	/	
B	B52	1,65	EZ 43	24x10	3,9	Ø0,16	1	/	
A	B53	2,77	EZ 43	24x10	3,3	Ø0,16	1	/	
B	B53	2,77	EZ 43	24x10	3,4	Ø0,16	1	/	

(A) Opinion	(B) Type of defect			
1=Optimum	Aa=porosity	Bc=slags weaving faults	C= lack of fusion	F=undercut
2=Good	Ab=worm holes	Bd= fault from bad chipping	D=incomplete penetration	K=shrinkage cavities
3=To the limit	Ba=slags inclusion	Be=fault at electrode change	IG=gas inclusion	V=shrinkage in root pass
4=To be repair	Bb=slags lines	Bf=fault at junction of seam	Ea=longitudinal cracks	X=out of alignement
		IW=tungsten inclusion	Eb=transverse cracks	I=metallic inclusion

Accettato / Accepted ☒ — Non Accettato / Not Accepted ☐ — Rapporto non conformità N° / Not conformity report No.

Emesso da QCD / Issued by QCD	Data / Date	Verificato da QCM / Verified by QCM	Data / Date	Ispettore / Inspector	Data / Date
E. ZANON J. Gaconi	22/11/06	E. ZANON A. Dal Santo	22-11-06		

QUALITY CONTROL SERVICE

E. ZANON S.p.A.

45

CERTIFICATO DI PROVA PNEUMATICA
PNEUMATIC TEST REPORT

Certificato N° / Document No. PT - 25/05 — Pag 1 di 1 / Sheet 1 of 1

Cliente Customer DESY	**Ordine N°** P.O. No. 659/430630011
Commessa Mfr' work No. 2870	**Disegno N°** Drawing No. 2870.01.01.00
Apparecchio Equipment CRIOSTAT	**N° Fabbrica** Serial No. 10344
Sigla Item CRY 3+	**PFC N°** QCP No. 2870.F.003 rev.0 step 2.7

Specifica di riferimento :
Reference Specification : E.ZANON No. 2870.S.005 rev.0 according to DWG No. 2870.5.001 rev.0

Camera in pressione :
Part under pression : Inside pipe. 70 °K pipe

Capacita' :
Capacity : /

Pressione di prova :
Pressure test : 20 bar .

N° di matricola manometro impiegato :
Used manometer : EZ 474. (0 to 60 bar)

Liquido rivelatore impiegato :
Detector fluid employed : Nitrogen

Durata del mantenimento in pressione:
Pressure holding time : 30 minutes .

Esito della prova :
Result of the test : **NESSUNA PERDITA O DEFORMAZIONE PERMANENTE E' STATA RISCONTRATA .** NO LEAK OR PERMANENT DEFORMATION WAS FOUND .

Accettato / Accepted	Non Accettato / Not Accepted	Rapporto non conformità N° / Not conformity report No.
☑	☐	----------

Emesso da QCD / Issued by QCD	Data / Date	Verificato da QCM / Verified by QCM	Data / Date	Ispettore / Inspector	Data / Date
E.ZANON	21.11.2006	E. ZANON	21.11.2006		

QUALITY CONTROL SERVICE

E. ZANON S.p.A.
46

MASS SPECTROMETER LEAK TESTING
– Vacuum pressure method –

Document No. TEN 51/06
Sheet 1 Of 1

Customer DESY	P.O.No. 659/430630011
Mfr's works No. 2870	Drawing 2870.01.01.00
Equipment CRIOSTAT	Serial No. 10344
Item CRY 3+	QCP No. 2870.F.003 rev.0 step 2.8

Reference Specification : E. ZANON No. 2870.S.003 rev.0

Mass spectrometer : UL 200 by Inficon (Leybold)

Auxiliary pumping group : Turbomolecular TURBOVAC1500l/sec – trivac D60A Leybold

Vacuum gauge :Combivac IT 230D Leybold

Calibration leak (qo):cat.14408 TL9 qo=2,1x10E-9 mbar.l.s-1 | Building date : 26.03.2004

Vacuum gauge position : farest point from leak detector

Calibration leak position : farest point from leak detector

Allowable leak : ≤1 x 10 E-10 mbar.l.s-1

Test gas : He	Pressure He test :19 bar	Concentration :C ≥ 95%	Test temperature (te)=15 °C

Correction coefficients : for the temperature K2=0.035/°C – over the years K1=0.001/for year

Calibration leak in testing conditions : qe = qo x (1-K1a) x [1+ K2 x(te-to)] = 1,51x 10 E-9 mbar.l.s-1

Vacuum in the vessel : 4.0 x 10 E-5 mbar | Vacuum in the analyzer : 1 x 10 E-6 mbar

Background signal in the mass spectrometer (n1) : 1 div. (scale 10 x 10-9)

Signal with calibration leak in the farest point (n2) : 38 div. (scale 10 x 10-9)

Response time : 2'

Sensitivity in the mass spectrometer : qe/(n2-n1) =1,51 x 10E-9/(38-1)=4,08 x 10E-11 mbar.l.s-1/div.

	time (minutes)	Mass spectrometer indication (number of division)
n1	0	1 div. (scale 10 x 10 E-9)
n	30'	1 div. (scale 10 x 10 E-9)

CALCULATION OF THE TOTAL LEAK : Q=(n –n1) x qe/(n2-n1) x 1/C x 1/P2-P1 =
No leak greater than 2,15 x 10E-12 mbar.l.s-1 was found.

Result of the test : satisfactory

Remarks : QCP No. 2870.F.003 rev.0 step 2.8

Accepted ■ | Not Accepted □ | Ref. To N.C. report No.

Issued by QCD	Date	Reviewed by QCM	Date	
E. ZANON	21.11.2006	E. ZANON	21.11.2006	

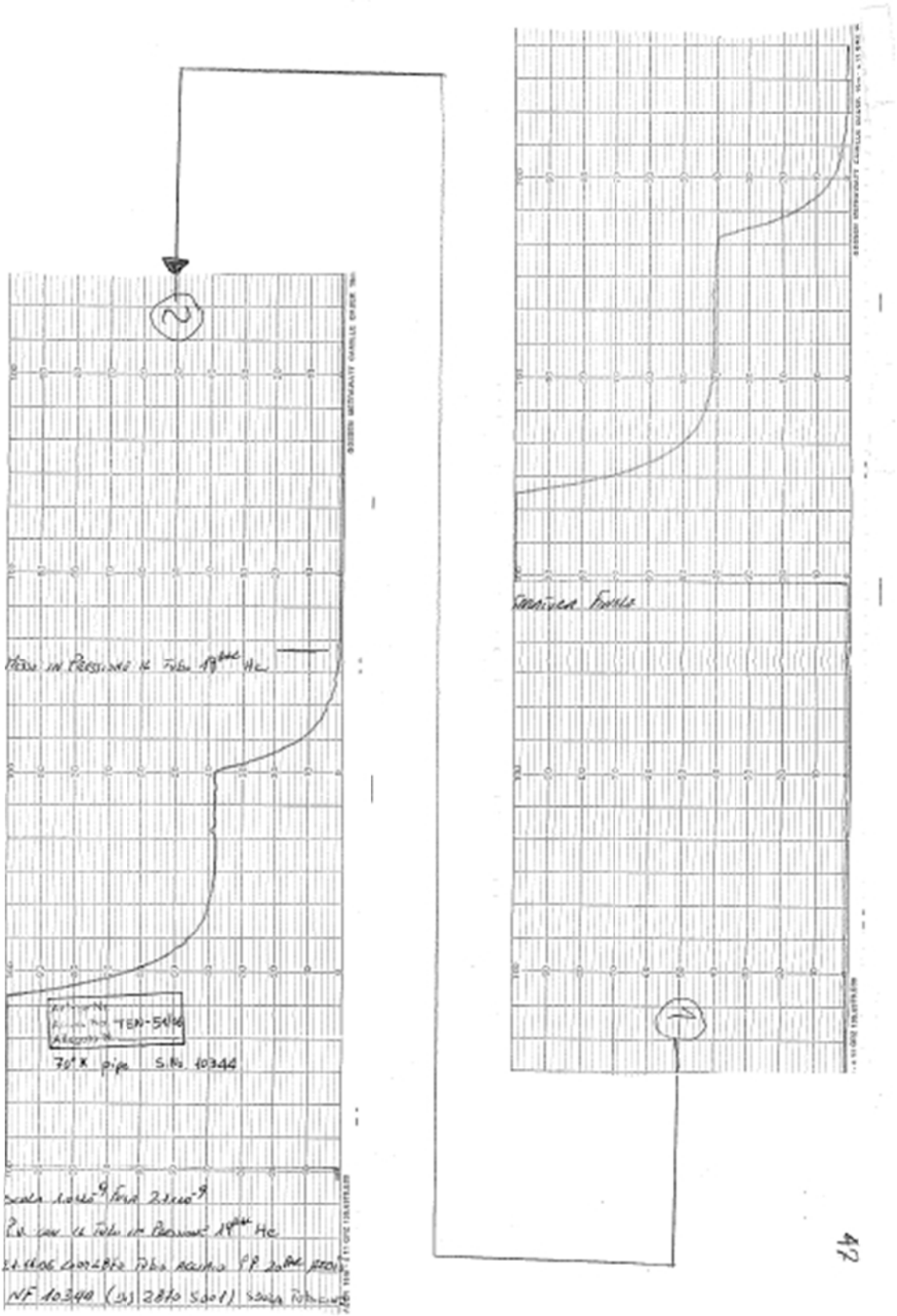
TEN-5106
70° X pipe S.No 10344
NF 10340

QUALITY CONTROL SERVICE

E. ZANON S.p.A.

48

CERTIFICATO DI PROVA PNEUMATICA
PNEUMATIC TEST REPORT

Certificato N° / Document No. PT - 27/06 — Pag 1 di 1 / Sheet 1 of 1

Cliente Customer DESY	**Ordine N°** P.O. No. 659/430630011
Commessa Mfr' work No. 2870	**Disegno N°** Drawing No. 2870.01.01.00
Apparecchio Equipment CRIOSTAT	**N° Fabbrica** Serial No. 10344
Sigla Item CRY 3+	**PFC N°** QCP No. 2870.F.003 rev.0 step 2.7

Specifica di riferimento :
Reference Specification : E.ZANON No. 2870.5.005 rev.0 according to DWG No. 2870.5.002 rev.0

Camera in pressione :
Part under pression : Inside pipe. 1,8 "K pipe

Capacita' :
Capacity : /

Pressione di prova :
Pressure test : 20 bar .

N° di matricola manometro impiegato :
Used manometer : EZ 474. (0 to 60 bar)

Liquido rivelatore impiegato :
Detector fluid employed : Nitrogen

Durata del mantenimento in pressione:
Pressure holding time : 30 minutes .

Esito della prova :
Result of the test : **NESSUNA PERDITA O DEFORMAZIONE PERMANENTE E' STATA RISCONTRATA .** NO LEAK OR PERMANENT DEFORMATION WAS FOUND .

Accettato / Accepted	Non Accettato / Not Accepted	Rapporto non conformità N° / Not conformity report No.
☒	☐	----------

Emesso da QCD / Issued by QCD	Data / Date	Verificato da QCM / Verified by QCM	Data / Date	Ispettore / Inspector	Data / Date
E. ZANON	21.11.2006	E. ZANON	21.11.2006		

QUALITY CONTROL SERVICE

E. ZANON S.p.A.

MASS SPECTROMETER LEAK TESTING
– Vacuum pressure method –

Document No. TEN 53/06
Sheet 1 Of 1

Customer DESY	P.O.No. 659/430630011
Mfr's works No. 2870	Drawing 2870.01.01.00
Equipment CRIOSTAT	Serial No. 10344
Item CRY 3+	QCP No. 2870.F.003 rev.0 step 2.8

Reference Specification : E. ZANON No. 2870.S.003 rev.0

Mass spectrometer : UL 200 by Inficon (Leybold)

Auxiliary pumping group : Turbomolecular TURBOVAC1500l/sec – trivac D60A Leybold

Vacuum gauge :Combivac IT 230D Leybold

Calibration leak (qo):cat.14408 TL9 qo=2,1x10E-9 mbar.l.s-1 | Building date : 26.03.2004

Vacuum gauge position : farest point from leak detector

Calibration leak position : farest point from leak detector

Allowable leak : ≤1 x 10 E-10 mbar.l.s-1

Test gas : He	Pressure He test :19 bar	Concentration :C ≥ 95%	Test temperature (te)=15 °C

Correction coefficients : for the temperature K2=0.035/°C – over the years K1=0.001/for year

Calibration leak in testing conditions : qe = qo x (1-K1a) x [1+K2 x(te-to)] = 1,51x 10 E-9 mbar.l.s-1

Vacuum in the vessel : 4.0 x 10 E-5 mbar | Vacuum in the analyzer : 1 x 10 E-6 mbar

Background signal in the mass spectrometer (n1) : 19div. (scale 10 x 10-9)

Signal with calibration leak in the farest point (n2) : 52 div. (scale 10 x 10-9)

Response time : 2'

Sensitivity in the mass spectrometer : qe/(n2-n1) =1,51 x 10E-9/(52-19)=4,58 x 10E-11 mbar.l.s-1/div.

	time (minutes)	Mass spectrometer indication (number of division)
n1	0	19 div. (scale 10 x 10 E-9)
n	30'	19 div. (scale 10 x 10 E-9)

CALCULATION OF THE TOTAL LEAK : Q=(n –n1) x qe/(n2-n1) x 1/C x 1/P2-P1 =
No leak greater than 2,41 x 10E-12 mbar.l.s-1 was found.

Result of the test : satisfactory

Remarks : Cooling pipe 1,8°K acc.to dwg No.2870.5.002 rev.0

Accepted ■ | Not Accepted □ | Ref. To N.C. report No.

Issued by QCD	Date	Reviewed by QCM	Date	
E. ZANON L. Pedan	21.11.2006	E. ZANON A.	21.11.2006	

APPENDIX A.7 – Pressure Test Reports

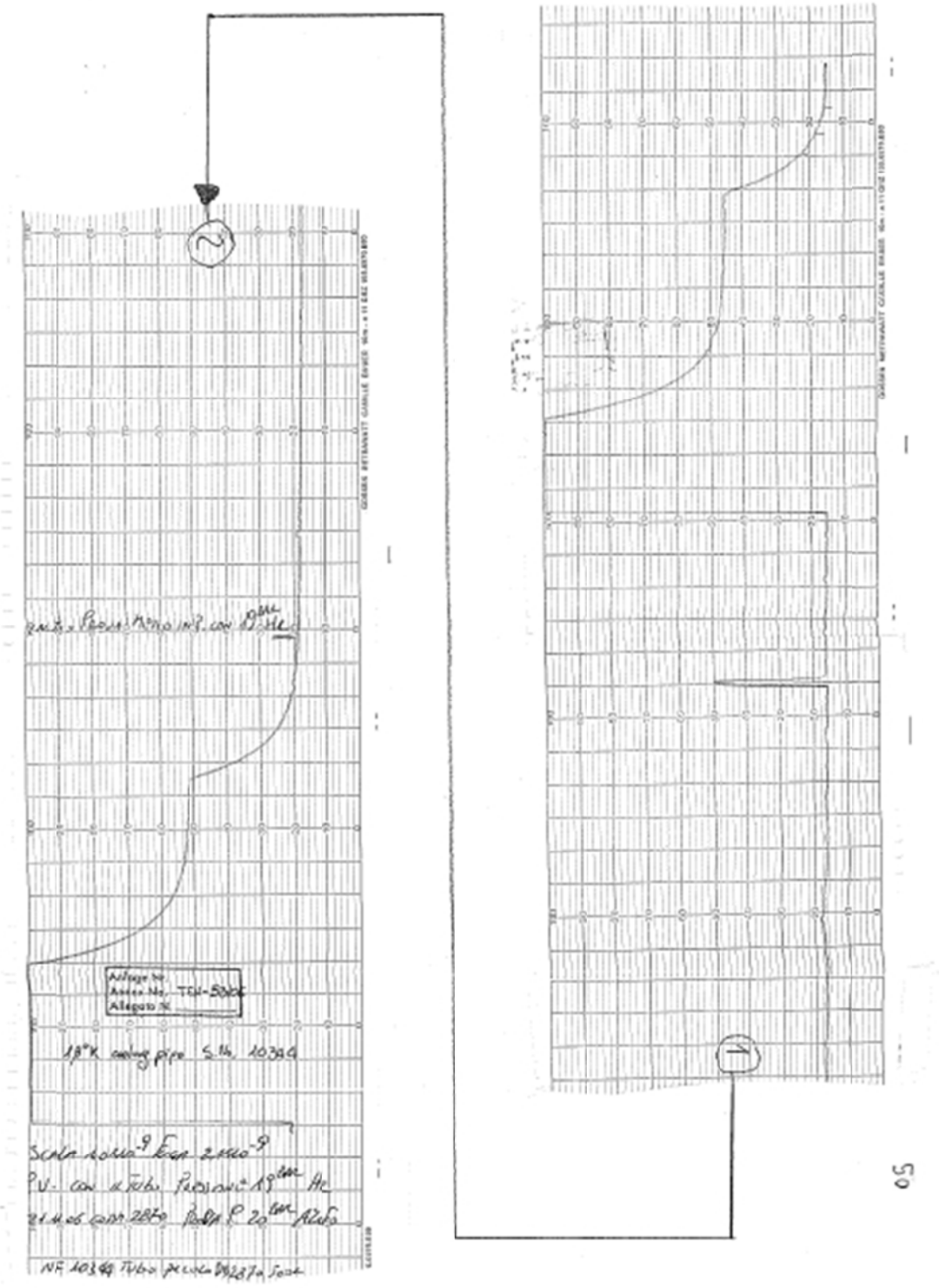

QUALITY CONTROL SERVICE

E. ZANON S.p.A.
51

CERTIFICATO DI PROVA PNEUMATICA
PNEUMATIC TEST REPORT

Certificato N° / Document No. PT - 29/05
Pag 1 di 1 / Sheet 1 of 1

Cliente Customer DESY	**Ordine N°** P.O. No. 659/4306300011
Commessa Mfr' work No. 2870	**Disegno N°** Drawing No. 2870.01.01.00
Apparecchio Equipment CRIOSTAT	**N° Fabbrica** Serial No. 10344
Sigla Item CRY 3+	**PFC N°** QCP No. 2870.F.003 rev.0 step 2.7

Specifica di riferimento :
Reference Specification : E.ZANON No. 2870.S.005 rev.0 according to DWG No. 2870.5.002 rev.0

Camera in pressione :
Part under pression : Inside pipe. 4,5 °K pipe

Capacita' :
Capacity : /

Pressione di prova :
Pressure test : 20 bar.

N° di matricola manometro impiegato :
Used manometer : EZ 474. (0 to 60 bar)

Liquido rivelatore impiegato :
Detector fluid employed : Nitrogen

Durata del mantenimento in pressione:
Pressure holding time : 30 minutes.

Esito della prova :
Result of the test : **NESSUNA PERDITA O DEFORMAZIONE PERMANENTE E' STATA RISCONTRATA.** NO LEAK OR PERMANENT DEFORMATION WAS FOUND.

Accettato / Accepted	Non Accettato / Not Accepted	Rapporto non conformità N° / Not conformity report No.
☒	☐	----------

Emesso da QCD / Issued by QCD	Data / Date	Verificato da QCM / Verified by QCM	Data / Date	Ispettore / Inspector	Data / Date
E. ZANON L. Fadini	20.11.2006	E. ZANON A. Del Santo	20.11.2006		

QUALITY CONTROL SERVICE

E. ZANON S.p.A.

52

MASS SPECTROMETER LEAK TESTING
– Vacuum pressure method –

Document No. TEN 55/06
Sheet 1 Of 1

Customer DESY	P.O.No. 659/430630011
Mfr's works No. 2870	Drawing 2870.01.01.00
Equipment CRIOSTAT	Serial No. 10344
Item CRY 3+	QCP No. 2870.F.003 rev.0 step 2.9

Reference Specification : E. ZANON No. 2870.S.003 rev.0

Mass spectrometer : UL 200 by Inficon (Leybold)

Auxiliary pumping group : Turbomolecular TURBOVAC1500l/sec – trivac D60A Leybold

Vacuum gauge :Combivac IT 230D Leybold

Calibration leak (qo):cat.14408 TL9 qo=2,1x10E-9 mbar.l.s-1 | Building date : 26.03.2004

Vacuum gauge position : farest point from leak detector

Calibration leak position : farest point from leak detector

Allowable leak : ≤1 x 10 E-10 mbar.l.s-1

Test gas : He	Pressure He test :19 bar	Concentration :C ≥ 95%	Test temperature (te)=15 °C

Correction coefficients : for the temperature K2=0.035/°C – over the years K1=0.001/for year

Calibration leak in testing conditions : qe = qo x (1-K1a) x [1+ K2 x(te-to)] = 1,51x 10 E-9 mbar.l.s-1

Vacuum in the vessel : 4.0 x 10 E-5 mbar | Vacuum in the analyzer : 1 x 10 E-6 mbar

Background signal in the mass spectrometer (n1) : 1 div. (scale 10 x 10-9)

Signal with calibration leak in the farest point (n2) : 24 div. (scale 10 x 10-9)

Response time : 2'

Sensitivity in the mass spectrometer : qe/(n2-n1) =1,51 x 10E-9/(24-1)= 6,56 x 10E-11 mbar.l.s-1/div.

	time (minutes)	Mass spectrometer indication (number of division)
n1	0	1 div. (scale 10 x 10 E-9)
n	30'	1 div. (scale 10 x 10 E-9)

CALCULATION OF THE TOTAL LEAK : Q=(n –n1) x qe/(n2-n1) x 1/C x 1/P2-P1 =
No leak greater than 3,45 x 10E-12 mbar.l.s-1 was found.

Result of the test : satisfactory

Remarks : Cooling pipe 4,5°K acc.to dwg No.2870.5.002 rev.0

Accepted ■ | Not Accepted □ | Ref. To N.C. report No.

Issued by QCD	Date	Reviewed by QCM	Date
E. ZANON L. Fedeli	20.11.2006	E. ZANON A. [illegible]	20.11.2006

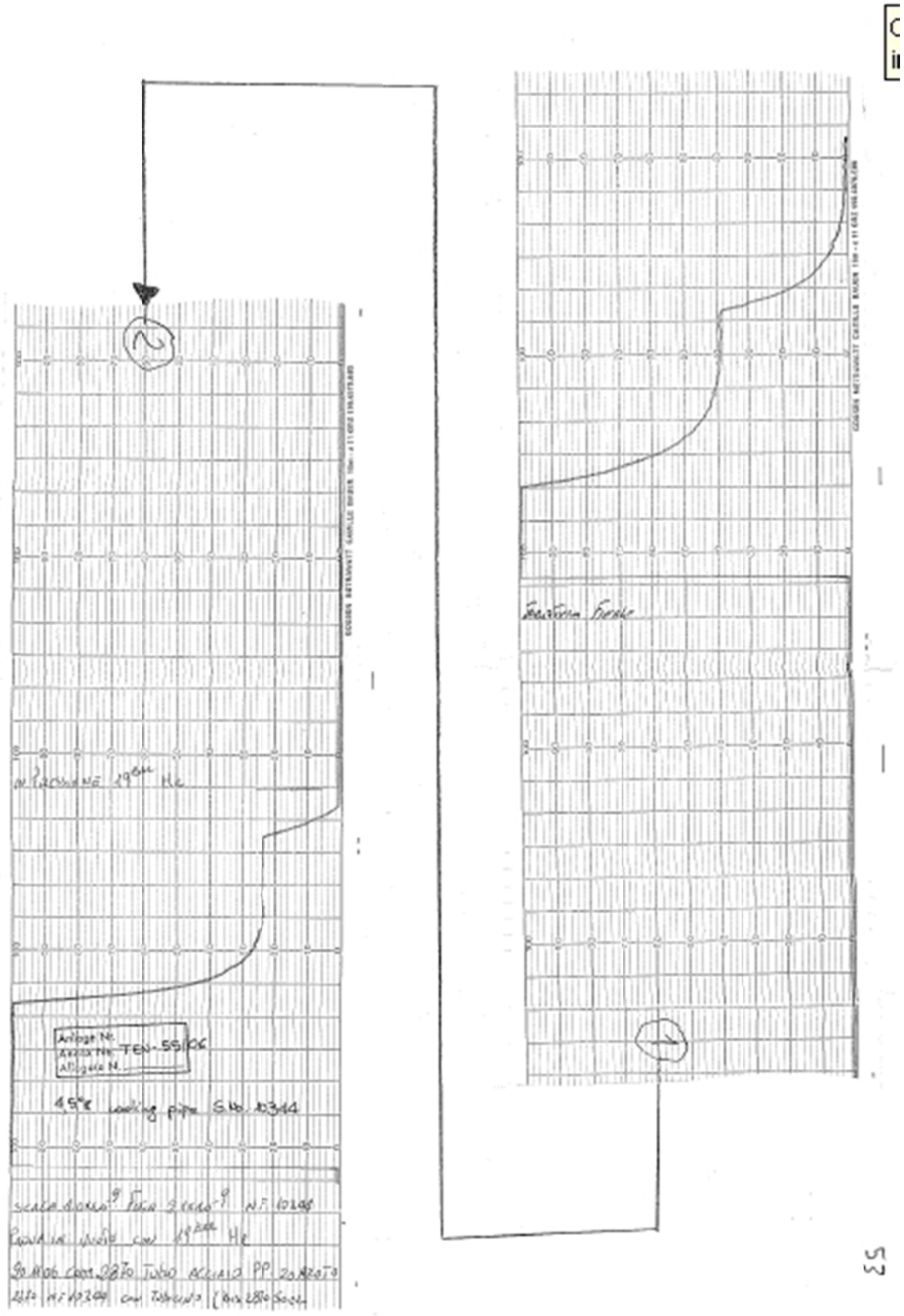
Antiga N.
Aceto N.
Allegato N.
TEN-55/06
4,5°C loading pipe S.No. 10344

QUALITY CONTROL SERVICE

E. ZANON S.p.A.
54

RAPPORTO DI CONTROLLO RADIOGRAFICO
RADIOGRAPHIC INSPECTION REPORT

Certificato N° / Report No. RX 247/06 — Pag. 1 di 2 / Page _ of _

Cliente / Customer	DESY	Ordine N° / P.O. No.	659 / 430630011
Commessa / Mfr' work No	2870	Disegno / Drawing	2870.5.003
Apparecchio / Equipment	Cryostats	N° Fabbrica / Serial No.	10344
Sigla / Item	Criomodule Type 3	PCQ N° / QCP N.	2870.F.003 Step 3.3

Reference Specification	Quality level	Object-film distance	Material
E.Zanon No. 5013 rev.8	/	Contact	AISI 316L

Instrument used	Films	Screen lead	Penetrameter (IQI)
Gilardoni MT 350/6-12	Kodak MX125	F = 0.05 mm B = 0.10 mm	10 FE EN

Source		Tension (Kv)	Current (mA)	Exposure time	Film processing
Rx X	Ry □	160	4	25"	Automatic

Skecth – Location marks:

100 % Examinations of welds B55

Back scattered check :

Sketch of execution method

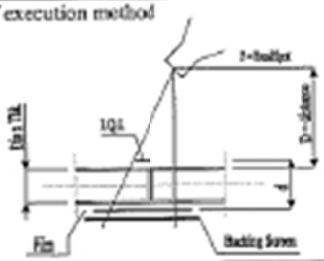

Performed by	Level	Test place	Date
Pieropan P.	I	Schio	Varias
Examined by	Level	Test place	
Dal Santo A.	II	Schio	17/11/06

Max Geometric unsharpness:

F X d / D = 1,7 x 42 / 700 = 0,10

Film per holder: 1 X 2 □

Viewing: Single □ Double X

Accepted X | Non Accepted □ | Ref. To N.C. report No.

Issued by QCD	Lev.	Data	Verified by QCM	Lev.	Date
E. ZANON Schio	1□ 2□ 3□	22/11/06	E. ZANON A. Dal Santo	2X 3□	22-11-06

QUALITY CONTROL SERVICE

E. ZANON S.p.A.
55

RAPPORTO DI CONTROLLO RADIOGRAFICO
RADIOGRAPHIC INSPECTION REPORT

Certificato N° / Report No.: RX 247/06
Pag. 2 di 2 / Page _ of _

Cliente / Customer	DESY	Ordine N° / P.O. No.	659 / 4300300011
Commessa / Mfr' work No	2870	Disegno / Drawing	2870.5.003
Apparecchio / Equipment	Cryostats	N° Fabbrica / Serial No.	10344
Sigla / Item	Criomodule Type 3	PCQ N° / QCP N.	2870.F.003 Step 3.3

Reference specification	Quality level
E.Zanon No. 5013 rev.8	ASME VIII Div. 1 – UW 51

Film No.	Weld No.	Thickness (mm)	Welder	Film Size (cm)	Density	Sensitivity IQI	(A)	(B)	Remarks
A	B55	1,65	EZ 43	24x10	3,4	Ø0,16	1	/	
B	B55	1,65	EZ 43	24x10	3,8	Ø0,16	1	/	

(A) Opinion	(B) Type of defect			
1=Optimum	Au=porosity	Be=slags weaving faults	C= lack of fusion	Fr=undercut
2=Good	Ak=worm holes	Bd= fault from bad chipping	D=incomplete penetration	K=shrinkage cavities
3=To the limit	Bs=slags inclusion	Be=fault at electrode change	IG=gas inclusion	V=shrinkage in root pass
4=To be repair	Bb=slags lines	Bf=fault at junction of seam	Ea=longitudinal cracks	X=out of alignment
		IW=tungsten inclusion	Et=transverse cracks	II=metallic inclusion

Accettato / Accepted: ☒ — Non Accettato / Not Accepted: ☐ — Rapporto non conformità N° / Not conformity report No.

Emesso da QCD / Issued by QCD	Data / Date	Verificato da QCM / Verified by QCM	Data / Data	Ispettore / Inspector	Data / Date
E. ZANON J. Saroni	22/11/06	E. ZANON A. Dal Santo	22-11-06		

APPENDIX A.8 – Weld Records

QUALITY CONTROL SERVICE — E. ZANON S.p.A. 56

LIQUID PENETRANT REPORT

Document N°: LP 415/06
Page 1 of 1

Customer	DESY	P.O. No.	659 / 430630011
Mfr's works No.	2870	Drawing	2870.5.003
Equipment	Cryostats	Serial N°	10344
Item	Criomodule Type 3	QCP N°.	2870.F.003 Step 3.5

Description of material: 100% Examination of welds C51, C52 and D54

SURFACE CONDITION	As welded	Machined	Ground	Forged	Laminated
	X				

INSPECTION MATERIALS	X Water washable		□ Post emulsificable		□ Solvent removable	
	X Visible	□ Fluoresc.	□ Visible	□ Fluoresc.	□ Visible	□ Fluoresc.
Cleaner	Acetone					
Penetrant	Rotvel AvioB					
Emulsifier	/					
Remover	Water					
Developer	Rotrivel U					
Trade mark	C.G.M.					
Light wave lenght	/					

INSPECTION PROCEDURE

Cleaning: wiping with white rags and acetone
Penetrant application: by wet brush
Removal penetrant : wiping with white rags and water
Developer application: by spraying
Drying process: air < 50 psig
Penetrant min time: 15 minutes
Surfaces temperature: 18 °C
Developing min. time: 10 minutes

Checking time: 10 to 60 minutes	Performed by	Level	Test place	Date
Acceptance testing liquid: OK certificates	A. Dal Santo	II	Schio	21/10/06
Cleaning after inspection: acetone	S. Loria	II	Schio	21/10/06

Result: POSITIVE – No relevant indication was found

Reference specification: E. Zanon No. 5006 rev. 5

X Accepted	Not Accepted	Ref. To N.C. report No.

Issued by QCD	Lev.	Date	Reviewed by QCM	Lev.	Date
E. ZANON L. Baconi	1□ 2□ 3□	21/10/06	E. ZANON A. Dal Santo	1□ 2□ 3□	21-10-06

QUALITY CONTROL SERVICE

E. ZANON S.p.A.

52

LIQUID PENETRANT REPORT

Document N°: LP 456/06
Page 1 of 1

Customer	**DESY**	**P.O. No.**	**659 / 430630011**
Mfr's works No.	**2870**	**Drawing**	**2870.5.003**
Equipment	**Cryostats**	**Serial N°**	**10344**
Item	**Criomodule Type 3**	**QCP N°.**	**2870.F.003 Step 3.5**

Description of material: 100% Examination of welds D53

SURFACE CONDITION	As welded	Machined	Ground	Forged	Laminated
	X				

INSPECTION MATERIALS	X Water washable		□ Post emulsificable		□ Solvent removable	
	X Visible	□ Fluoresc.	□ Visible	□ Fluoresc.	□ Visible	□ Fluoresc.
Cleaner	Acetone					
Penetrant	Rotvel AvioB					
Emulsifier	/					
Remover	Water					
Developer	Rotrivel U					
Trade mark	C.G.M.					
Light wave lenght	/					

INSPECTION PROCEDURE

Cleaning: wiping with white rags and acetone
Penetrant application: by wet brush
Removal penetrant : wiping with white rags and water
Developer application: by spraying

Drying process: air < 50 psig
Penetrant min time: 15 minutes
Surfaces temperature: 18 °C
Developing min. time: 10 minutes

Checking time: 10 to 60 minutes	Performed by	Level	Test place	Date
Acceptance testing liquid: OK certificates	A. Dal Santo	II	Schio	23/11/06
Cleaning after inspection: acetone	S. Loria	II	Schio	23/11/06

Result: **POSITIVE – No relevant indication was found**

Reference specification: E. Zanon No. 5006 rev. 5

X Accepted	Not Accepted	Ref. To N.C. report No.

Issued by QCD	Lev.	Date	Reviewed by QCM	Lev.	Date	
	1□ 2□ 3□	23/11/06	E. ZANON A. Dal Santo	1□ 2X 3□	23-11-06	

QUALITY CONTROL SERVICE

E. ZANON S.p.A.

CERTIFICATO DI CONTROLLO DIMENSIONALE
DIMENSIONAL CHECK REPORT

Certificato N° / Report No.: CD 423/06

Pag. 1 di 1 / Page _ of _

Cliente / Customer	DESY	Ordine N° / P.O. No.	659 / 430630011
Commessa / Mf' work N°	2870	Disegno / Drawing	See below
Apparecchio / Equipment	Cryostats – Pipes	N° Fabbrica / Serial No.	10344
Sigla / Item	Criomodule Type 3	PCQ N° / QCP N.	2870.F.003

Descrizione del materiale: / Material description:

Step 1.6: Dimensional check 4.5° & 70° K Cooling pipe (Al 6060 T5) - Dwg. 2870.3.001 & 2870.4.001

Step 2.6: Dimensional check 1.8, 4.5° & 70° K Cooling pipe (AISI 316L) - Dwg. 2870.5.001 & 2870.5.002

Step 3.6: Dimensional check Warm-up pipe (AISI 316L) - Dwg. 2870.5.003

Specifica / Specification	Materiale / Material	Colata / Heat
/	/	/

Apparecchio di controllo: / Instrument used:

Meter EZ 444 - Caliper EZ-30

Laser meter "Leica"

Flexible meter EZ 450

THE PIECES HAVE BEEN CHECKED

RESULT OF THE CHECK: Conforming to drawing in accordance to applicable tollerance

Accettato / Accepted	Non Accettato / Not Accepted	Rapporto non conformità N° / Not conformity report No.
☑	☐	

Emesso da QCD / Issued by QCD	Data / Date	Verificato da QCM / Verified by QCM	Data / Date	Ispettore / Inspector	Data / Date
	21/12/06	E. ZANON A. Del Santo	21.12.06		

QUALITY CONTROL SERVICE

E. ZANON S.p.A.

CERTIFICATO DI PROVA PNEUMATICA
PNEUMATIC TEST REPORT

Certificato N° / Document No. PT 31/06 — Pag 1 di 1 / Sheet 1 of 1

Cliente Customer DESY	**Ordine N°** P.O. No. 659/430630011
Commessa M.fr' work No. 2870	**Disegno N°** Drawing No. 2870.01.01.00
Apparecchio Equipment CRIOSTAT	**N° Fabbrica** Serial No. 10344
Sigla Item CRY 3+	**PFC N°** QCP No. 2870.F.003 rev.0 step 3.7

Specifica di riferimento :
Reference Specification : E.ZANON No. 2870.S.005 rev.0 according to DWG No. 2870.5.003 rev.0

Camera in pressione :
Part under pression : Inside pipe. Warm up tube

Capacita' :
Capacity : /

Pressione di prova :
Pressure test : 20 bar.

N° di matricola manometro impiegato :
Used manometer : EZ 474. (0 to 60 bar)

Liquido rivelatore impiegato :
Detector fluid employed : Nitrogen

Durata del mantenimento in pressione:
Pressure holding time : 30 minutes.

Esito della prova :
Result of the test : **NESSUNA PERDITA O DEFORMAZIONE PERMANENTE E' STATA RISCONTRATA .** NO LEAK OR PERMANENT DEFORMATION WAS FOUND .

Accettato ☒ Accepted	Non Accettato ☐ Not Accepted	Rapporto non conformità N° Not conformity report No. ----------

Emesso da QCD Issued by QCD	Data Date	Verificato da QCM Verified by QCM	Data Date	Ispettore Inspector	Data Date
E.ZANON	20.11.2006	E. ZANON A. Del Santo	20.11.2006		

QUALITY CONTROL SERVICE

E. ZANON S.p.A. 60

MASS SPECTROMETER LEAK TESTING
– Vacuum method –

Document No. TEN 57/06
Sheet 1 Of 1

Customer DESY	P.O.No. 659/430630011
Mfr's works No. 2870	Drawing 2870.01.01.00
Equipment CRIOSTAT	Serial No. 10344
Item CRYO 3+	QCP No. 2870.F.001 rev. 0 step 3.8

Reference Specification : E. ZANON No. 2870.S.002 rev.0

Mass spectrometer : UL 200 by Inficon Leybold

Auxiliary pumping group : /

Vacuum gauge : /

Calbration leak (qo): cat. 14408 TL9 qo= 2,1x10E-9 mbar.l.s-1 | Building date : 26.03.2004

Vacuum gauge position : farest point from leak detector

Calibration leak position : farest point from leak detector

Allowable leak : ≤1 x 10 E- 9 mbar.l.s-1

Test gas : He | Concentration :C = ≅ 50% | Test temperature (te) = 15°C

Correction coefficients : for the temperature K2=0.035/°C – over the years K1=0.001/for year

Calibration leak in testing conditions : qe = qo x (1-K1a) x [1+ K2 x(te-to)] = 1,509 x 10E-9 mbar.l.s-1

Vacuum in the vessel : <1 x10-3 mbar | Vacuum in the analyzer : 2 x 10-6 mbar

Background signal in the mass spectrometer (n1) : 1 div. (scale 10 x 10-9)

Signal with calibration leak in the farest point (n2) : 44 div. (scale 10 x 10-9)

Response time : 1'

Sensitivity in the mass spectrometer : K= qe/(n2-n1) = 1,509x10-9/(44-1)= 3,5 x 10E-11 mbar.l.s-1/div.

	time (minutes)	Mass spectrometer indication (number of division)
n1	0	1 div. (scale 10 x 10 E-9)
n	10'	1 div. (scale 10 x 10 E-9)

CALCULATION OF THE TOTAL LEAK : Q=(n –n1) x qe/(n2-n1) x 1/C =
No leak greater than 7,0 x 10E-11 mbar.l.s-1 was found.

Result of the test : satisfactory

Remarks : tracer probe technique on warm up tube welds acc. to Dwg. No. 2870.5.003 rev.0

Accepted ☒ | Not Accepted ☐ | Ref. To N.C. report No.

Issued by QCD	Date	Reviewed by QCM	Date
E. ZANON L. Fodell	20.11.2006	E. ZANON A. D[illegible]	20.11.2006

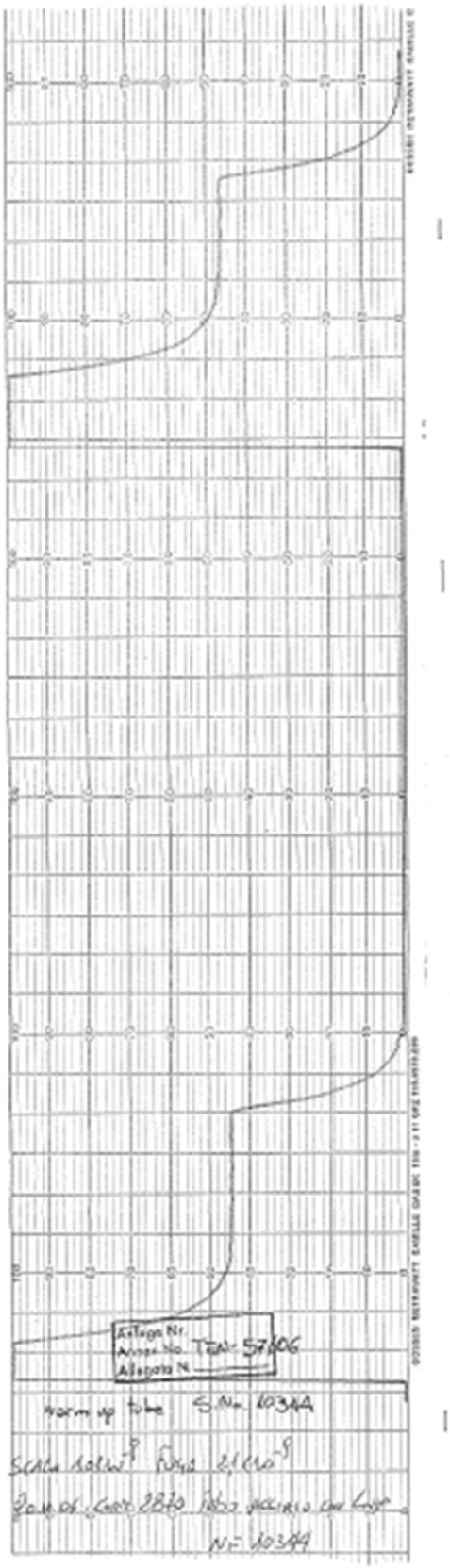
Anlage Nr.
Annex No. TEN 57606
Allegato N.
Warm up tube S.No. 10344
Scala 10 Ω
Fuga 2,1 x 10⁻⁹
Zona di Cent. 2870 Tubo piccolo con Lega
N= 10344

QUALITY CONTROL SERVICE | E. ZANON S.p.A.

MANUFACTURE'S DATA BOOK

Cliente Customer	DESY	Ordine N° P.O. No.	659 / 430630011
Commessa Mfr work No	2870	Disegno Drawing	/
Apparecchio Equipment	Cryostats	N° Fabbrica Serial No.	10344
Sigla Item	Cromodule Type 3	PCQ N° QCP N.	/
Progetto Project	XFEL		

SECTION 4

List of Materials Employed

Emesso da QCD Issued by QCD	Data Date	Verificato da QCM Verified by QCM	Data Data	Ispettore Inspector	Data Date

QUALITY CONTROL SERVICE

62

E.ZANON S.p.A.

LISTA DEI MATERIALI IMPIEGATI
LIST OF MATERIALS EMPLOYED

Documento N° IM- 54/06
Document No.
Pagina 1 di 2
Sheet of

Cliente Customer	**DESY**	**N° Ordine** P.O.No.	659/430630011
Commessa Mfr's Works No.	**2870**	**Disegno** Drawing	**See Below**
Componente Equipment	**Cryostats**	**N° Fabbrica** Serial No.	10344 - 10345
Sigla Item	**Criomodule Type 3**	Q.C.P. No.	2870.F.001 Step 1

Disegno Drawing	Pos. Pos.	Dimensioni Dimension	Materiale Material	Colata N° Heat No.	Costruttore Manufacturer	Certificato Test certificate	N°di rif Ref.No.
2870.1.001	1	Ø1160/984x40	A182 F304L	501669	Inoxfucina	553/06/IF-576	1
"	2	Ø1160/965x40	A182 F304L	501669	Inoxfucina	553/06/IF-576	1
"	3	Ø1080/984x30	A182 F304L	501669	Inoxfucina	553/06/IF-576	1
"	4 A	Plate thk. 10 mm	P265 GH	11443	Vitkovice Steel	21265/2005	41
"	4 B	Plate thk. 10 mm	P265 GH	11443	Vitkovice Steel	21265/2005	41
"	7	Plate thk. 20 mm	P335 GH	67932 AE 739-2	Corus	04/00825118/1	2
"	8-17	Rod Ø 80 mm	S355 JO	05/30716	Metaltabi	1566	28
"	9-18 22-27 29-31 32	Plate thk. 8 mm	P265 GH	730 211485 6652020	SOLLAC Mediterranée	720/006/699	3
"	10	Plate thk. 12 mm	Fe 410.1 KW	49706-12	Rautaruukki	27340-01	5
"	11	Ø640/394x168	A182 F304L	501669	Inoxfucina	553/06/IF-576	1
"	16	Plate thk. 25 mm	P265 GH	48331 246721-1	Hamburger Grobblech	382738	4
"	28	Plate thk. 16 mm	P265 GH	683639 86637202	Thyssen Krupp Stahl AG	108824	6
"	30	Plate thk. 10 mm	P265 GH	11443	Vitkovice Steel	21265/2005	41
2870.1.002	1	Plate thk. 30 mm	A240 304L	5NM0	Acerinox	580766 2/1	12
"	2-20	Plate thk. 5 mm	A240 304L	N 149079	ALZ	2002.0009100	7
"	3	Plate thk. 48 mm	A240 304L	57551 250905-1	FAFER	9429	15
"	5	Plate thk. 20 mm	A240 304L	7HV4	Acerinox	606382 102/2	13
"	7-9 21	Plate thk. 25 mm	A240 304L	5NL6	Acerinox	582940 302/1	11
"	8-15	Pipe Ø88,9x2,11	A312 Tp.304L	4222834	Outo Kumpu	N0528003/1	22
"	10	Plate thk. 5 mm	A240 304L	40332-006 N 149079	Outo Kumpu ALZ	1243692-EN 2002.0009100	8 7

Accepted ☑ Not Accepted ☐ Ref. To N.C. report No.

Issued by QCD	Date	Reviewed by QCM	Date	
E. ZANON per Zanon	15/12/2006	E. ZANON A. Dal Bello	15/12/2006	

QUALITY CONTROL SERVICE

E.ZANON s.p.a.

LISTA DEI MATERIALI IMPIEGATI
LIST OF MATERIALS EMPLOYED

Documento N° IM- 54/06
Document No.
Pagina 2 di 2
Sheet of

Cliente / Customer	DESY	N° Ordine / P.O.No.	659/430630011
Commessa / Mfr's Works No.	2870	Disegno / Drawing	See Below
Componente / Equipment	Cryostats	N° Fabbrica / Serial No.	10344 - 10345
Sigla / Item	Criomodule Type 3	Q.C.P. No.	2870.F.001 Step 1

Disegno Drawing	Pos. Pos.	Dimensioni Dimension	Materiale Material	Colata N° Heat No.	Costruttore Manufacturer	Certificato Test certificate	N°di rif Ref.No.
2870.1.002	11-23	Flange DN 63 CF	A240 304L	See Dossier			27
"	12	Plate thk. 3 mm	A240 304L	931366-004	Avesta Polarit	920351-EN	44
"	13	Plate thk. 20 mm	A240 304L	7HV4	Acerinox	606382 102/2	13
"	14	Pipe Ø114,3x3,05	A312 Tp.304L	489520	Schoeller Bleckmann	C101262	23
"	16	Plate thk. 20 mm	A240 304L	7HV4	Acerinox	606382 102/2	13
"	24 25	Pipe Ø108x3	A240 316L	566892	Marcegaglia	4812	26

Accepted ☑	Not Accepted ☐	Ref. To N.C. report No.		
Issued by QCD	Date	Reviewed by QCM	Date	
E. ZANON	15/12/2006	E. ZANON A. Del Santo	15/12/2006	

QUALITY CONTROL SERVICE

E.ZANON S.p.A. 69

LISTA DEI MATERIALI IMPIEGATI
LIST OF MATERIALS EMPLOYED

Documento N° IM- 55/06
Document No.
Pagina 1 di 1
Sheet — of —

Cliente / Customer	DESY	N° Ordine / P.O.No.	659/430630011
Commessa / Mfr's Works No.	2870	Disegno / Drawing	See Below
Componente / Equipment	Cryostats	N° Fabbrica / Serial No.	10344 - 10345
Sigla / Item	Criomodule Type 3	Q.C.P. No.	2870.F.002 Step 1

Disegno Drawing	Pos. Pos.	Dimensioni Dimension	Materiale Material	Colata N° Heat No.	Costruttore Manufacturer	Certificato Test certificate	N°di rif Ref.No.
2870.2.001	1	Plate thk.15 mm	A240 316L	322038	Columbus Stainless	455195-1	10
"	2-7 11-40	Plate thk. 6 mm	A240 316L	EK22100	ALZ	98/0069757	32
"	3	Pipe Ø312x6	A240 316L	604118	Ugine & ALZ	2006K0009489	33
"	8-12	Plate thk. 6 mm	A240 316L	604118	Ugine & ALZ	2006K0009489	33
"	9	Plate thk.10 mm	A240 316L	E 520026	Ugine & ALZ	2005.0061823	9
"	10	Plate thk. 6 mm	A240 316L	EK22100 604118	ALZ Ugine & ALZ	98/0069757 2006K0009489	32 33
"	13-21 33-39	Plate thk.10 mm	A240 316L	E 520026	Ugine & ALZ	2005.0061823	9

Accepted ☑ | Not Accepted ☐ | Ref. To N.C. report No.

Issued by QCD	Date	Reviewed by QCM	Date
E. ZANON	15/12/2006	E. ZANON	15/12/2006

QUALITY CONTROL SERVICE

E.ZANON S.p.A. 65

LISTA DEI MATERIALI IMPIEGATI
LIST OF MATERIALS EMPLOYED

Documento N° IM- 56/06
Document No.
Pagina 1 di 3
Sheet of

Cliente / Customer	DESY	N° Ordine / P.O.No.	659/430630011
Commessa / Mfr's Works No.	2870	Disegno / Drawing	See Below
Componente / Equipment	Cryostats	N° Fabbrica / Serial No.	10344 - 10345
Sigla / Item	Criomodule Type 3	Q.C.P. No.	2870.F.003 Step 1.1 - 2.1 - 3.1

Disegno Drawing	Pos. Pos.	Dimensioni Dimension	Materiale Material	Colata N° Heat No.	Costruttore Manufacturer	Certificato Test certificate	N°di rif Ref.No.
2870.3.001	1A	Plate thk. 6mm	Aluminium EN AW-1050A	H170601	Aviometal	0041483/A	17
"	1B	Plate thk. 6mm	Aluminium EN AW-1050A	H170601	Aviometal	0041483/A	17
"	2	Plate thk. 6mm	Aluminium EN AW-1050A	H096601	Aviometal	0040129/A	18
"	3	Plate thk. 6mm	Aluminium EN AW-1050A	H170601	Aviometal	0041483/A 0041481/A	17A 17B
"	4-5 6-7 8-9 10-11 13-29 30	Plate thk. 3mm	Aluminium EN AW-1050A	H070701 H061701 H081707	Aviometal	0040128/A 0040130/A 0040131/A	19 29 30
"	12	4.5"K Tube	6060 T5	95652 – 11309	Alcoa Italia S.p.A.	6098	45
"	24	Bimetallic Coupling 060x5-060,3x2,76	Al 5083 - 316L	See Dossier			42
"	25-26	Tube 060,3x2,77	A312 Tp.316L	L29704 ZAP 292050 L48474 30507-10	Tubacex Tubacex Schoeller Bleckmann Chengwan Specialty Wellslink Enterprise	321812 238177 C21115 11454200 CA0800	36 37 38 39 40
"	27	Tube 012x1,5	A312 Tp.316L	V80141	Brasimet Industries	T9023-4	34
"	31	Plate thk. 6mm	Aluminium EN AW-1050A	H096601	Aviometal	0040129/A	18
2870.3.002	1-2	Plate thk. 3mm	Aluminium EN AW-1050A	H070701	Aviometal	0040128/A	19
2870.4.001	1A 1B	Plate thk. 6mm	Aluminium EN AW-1050A	H170601	Aviometal	0041483/A	17
"	2-3	Plate thk. 6mm	Aluminium EN AW-1050A	H096601	Aviometal	0040129/A	18
"	4 5÷10 11-13 29-30	Plate thk. 3mm	Aluminium EN AW-1050A	H070701 H061701 H081707	Aviometal	0040128/A 0040130/A 0040131/A	19 29 30
"	12	4.5"K Tube	6060 T5	95652 – 11309	Alcoa Italia S.p.A.	6098	45

Accepted ☑ Not Accepted ☐ Ref. To N.C. report No.

Issued by QCD	Date	Reviewed by QCM	Date
E. ZANON	15/12/2006	E. ZANON A. Del Barro	15/12/2006

QUALITY CONTROL SERVICE

E.ZANON ... 66

LISTA DEI MATERIALI IMPIEGATI
LIST OF MATERIALS EMPLOYED

Documento N° IM- 56/06
Document No.
Pagina 2 di 3
Sheet of

Cliente / Customer	DESY	N° Ordine / P.O.No.	659/430630011
Commessa / Mfr's Works No.	2870	Disegno / Drawing	See Below
Componente / Equipment	Cryostats	N° Fabbrica / Serial No.	10344 - 10345
Sigla / Item	Criomodule Type 3	Q.C.P. No.	2870.F.003 Step 1.1 - 2.1 - 3.1

Disegno Drawing	Pos. Pos.	Dimensioni Dimension	Materiale Material	Colata N° Heat No.	Costruttore Manufacturer	Certificato Test certificate	N°di rif Ref.No.
2870.4.001	24	Bimetallic Coupling Ø60x5-Ø60,3x2,76	Al 5083 - 316L	See Dossier			42
"	25-26	Pipe Ø60,3x2,77	A312 Tp.316L	L29794 ZAP 292090 L48474 J0507-10	Tubacex Tubacex Schoeller Bleckmann Changwon Specialty Wellslink Enterprise	321812 238177 C21115 11454200 CA0800	36 37 38 39 40
"	31	Plate thk. 6mm	Aluminium EN AW-1050A	H096601	Aviemetal	0040129/A	18
2870.4.002	1-2	Plate thk. 3mm	Aluminium EN AW-1050A	H070701 H061701 H081707	Aviemetal	0040128/A 0040130/A 0040131/A	19 29 30
2870.5.001	1A 1B	Pipe Ø60,3x2,77	A312 Tp.316L	L29794 ZAP 292090 L48474 J0507-10	Tubacex Tubacex Schoeller Bleckmann Changwon Specialty Wellslink Enterprise	321812 238177 C21115 11454200 CA0800	36 37 38 39 40
"	2	Plate thk. 8mm	A240 316L	126627 32232	Avesta Polarit	3101018	14
"	3	Plate thk. 3mm	A240 316L	312556	Columbus Stainless	193427	16
"	4	Plate thk. 6mm	A240 316L	E822100	ALZ	98/0069757	32
2870.5.002	1	Pipe Ø48,3x1,65	A312 Tp.316L	470212 F02840	DMV	02.03003 05.01986	24 25
"	2	Pipe Ø60,3x2,77	A312 Tp.316L	L29794 ZAP 292090 L48474 J0507-10	Tubacex Tubacex Schoeller Bleckmann Changwon Specialty Wellslink Enterprise	321812 238177 C21115 11454200 CA0800	36 37 38 39 40
"	3	Tube Ø12x1,5	A312 Tp.316L	V80141	Brasimet Industries	T9623-4	34
"	5-6 16	Plate thk. 3mm	A240 316L	312556	Columbus Stainless	193427	16
"	7	Plate thk. 6mm	A240 316L	E822100	ALZ	98/0069757	32

Accepted ☑ Not Accepted ☐ Ref. To N.C. report No.

Issued by QCD	Date	Reviewed by QCM	Date	
E. ZANON	15/12/2006	E. ZANON A. Del Serro	15/12/2006	

QUALITY CONTROL SERVICE

E.ZANON s.p.a.

67

LISTA DEI MATERIALI IMPIEGATI
LIST OF MATERIALS EMPLOYED

Documento N° IM- 56/06
Document No.
Pagina 3 di 3
Sheet — of —

Cliente Customer	**DESY**	**N° Ordine** P.O.No.	**659/430630011**
Commessa Mfr's Works No.	**2870**	**Disegno** Drawing	**See Below**
Componente Equipment	**Cryostats**	**N° Fabbrica** Serial No.	**10344 - 10345**
Sigla Item	**Criomodule Type 3**	Q.C.P. No.	2870.F.003 Step 1.1 - 2.1 - 3.1

Disegno Drawing	Pos. Pos.	Dimensioni Dimension	Materiale Material	Colata N° Heat No.	Costruttore Manufacturer	Certificato Test certificate	N°di rif Ref.No.
2870.5.003	1A 1B	Pipe Ø42.16x1.65	A312 Tp.316L	912361	Nikopol Stainless	2004/3029-11	21
"	2	Plate thk. 3mm	A240 316L	312556	Columbus Stainless	193427	16
"	3-12	Pipe Ø10,2x2,41	A312 Tp.316L	QD266 350040	DMV DMV	05.00487 95/05793	31 35
"	4-11	Pipe Ø5x1	A312 Tp.316L	O9Z535	Schoeller Bleckmann	C17053	20
"	5-13	Flange DN 16 CF	316L	004773	Accinierie Valbruna	2337/2002	43
"	7-8	Plate thk. 6mm	A240 316L	EK22100	ALZ	9810069757	32
2870.6.001	1	Plate thk. 30mm	A240 304L	5NB0	Acerinox	580766 2/1	12
"	1-13	Plate thk. 20mm	A240 304L	7HV4	Acerinox	606382 102/2	13

Accepted ☑ Not Accepted ☐ Ref. To N.C. report No.

Issued by QCD	Date	Reviewed by QCM	Date	
E. ZANON	15/12/2006	E. ZANON A. Del Santo	15/12/2006	

TÜV CERT DIN EN ISO 9001 Certificate: 07 100 938 | TÜV APPROVED MANUFACTURER ACC. TO 'ADMERKBLATT' MOTHD 100 | TÜV APPROVED MANUFACTURER ACC. TO 97/23/EC Certificate no.: CE 000 2530 Z 0A1/2/H

Nikopol Stainless Tube Mill

53201 56, Trubnikov Avenue Nikopol Dnepropetrovsk Region Ukraine tel/fax (05662) 2-51-94

Требования Сертификата Inspection Certificate EN 10204/3.1.B	Сертификат приемочных испытаний № Material Test Certificate No. 2004/3029-11	Лист/Page 1	Листов/Pages 2
Заказчик Customer	METALSTEEL DIV. DI SO.GE.Par S.p.A		
Страна назначения Country of destination	ITALY		
Адрес Address	Via per Montodine, 26012 Castelleone, Cremona		
Контракт №/Contract No.	1237/04		

102

ТЕХНИЧЕСКИЕ ТРЕБОВАНИЯ / TECHNICAL REQUIREMENTS

Наименование продукции/Goods' description
SEAMLESS STAINLESS STEEL COLD ROLLED TUBES

Metalsteel Stainless Steel Service 3S div. di So.Ge.Par. S.p.A. RESPONSABILE CONTROLLO QUALITA'

НТД/Specification **ASTM/ASME: A-SA 312-03; ASTM: A-999/999M-01; NACE MR 01.75-00.**

Способ выплавки/Melting process	EAF+AOD	Маркировка/Marking	NSTM

Состояние поставки / State of delivery **passivated**

штамп контролера / Inspector's stamp

Э1

Сортамент / Range of sizes

номер партии, Lot	марка стали/ Steel grade	плавка/ Heat No.	штук/ Pieces	метраж/ Total Length, m	вес нетто, кг Net weight, kg	размеры/Dimensions, mm	Гидроиспытания/ Hydr. test MPa
3709	TP 316/316L	912361	56	320	514	OD 42,16 x 1,65 WT x 4570-7315	OK
3736	TP 316/316L	912361	55	292	522	OD 42,16 x 1,65 WT x 4570-7315	OK
		TOTAL:	**111**	**612**	**1036**		

Vs. Ord. 38/1539
Ns.DDT. 43/21
Del 15/05/04

COPY CONFORMING TO THE ORIGINAL
Metalsteel
Stainless Steel Service 3S
div. di So.Ge.Par. S.p.A.
LORENA VIGANI
SIGNATURE

дата / date **08.11.2004** эксперт/inspector Э1 V.Chaplitskiy

E.Z.
T S
142

N° di rif. 21
Ref. N°

РЕЗУЛЬТАТЫ ИСПЫТАНИЙ / TEST RESULTS

103

МЕХАНИЧЕСКИЕ ИСПЫТАНИЯ/MECHANICAL TESTS

партия/ Lot No.	плавка/ Heat No.	№ образца испыта-ний/ Specimen No.	направление испытаний/ Test direction	темпе-ратура испытаний/ Test temperature, °C	предел текуче сти/ Yield strength, MPa	прочность при растяжении Tensile strength, MPa	удли-нение Elon-gation %	ударная вязкость/ Impact strength, J/cm²	твер-дость/ Rockwell Hardness, HRB
3709	912361	1	longitudinal,	20	245	590	44		78
		2	width		283	630	45		75
3736	912361	1	gage length		263	610	44		75
		2	12,5 mm		305	640	42		77

РЕЗУЛЬТАТЫ МИКРОСТРУКТУРЫ/ MICROSTRUCTURE RESULTS — **n/a.**

ТЕХНОЛОГИЧЕСКИЕ ИСПЫТАНИЯ/ TECHNOLOGICAL TESTS — **flattening – 1 – 2 stage – acceptable.**

ИСПЫТАНИЯ НА МЕЖКРИСТАЛЛИТНУЮ КОРРОЗИЮ INTERGRANULAR CORROSION TEST — **A 262, Practice E – acceptable.**

ИСПЫТАНИЕ НА СООТВЕТСТВИЕ МАРКИ СТАЛИ POSITIVE MATERIAL IDENTIFICATION — **– 100% satisfactory.**

НЕРАЗРУШАЮЩИЙ КОНТРОЛЬ/ NON-DESTRUCTIVE TEST METHOD — **100% hydro-tested – acceptable.**

ПРИМЕЧАНИЯ ADDITIONAL REMARKS — **Tubes are heat treated : 1060° C holding time 5 minutes then cooled by water.**

100% Визуальный контроль, проверка размеров и несмешивание марок/ VISUAL INSPECTION, DIMENSIONAL MEASUREMENT – SATISFACTORY.

NOTE

The manufacturer guarantees that the material is in conformity with the Pressure Equipment Directive (PED 97/23/EC), annex I, clause 4.3, and the properties of the material are as follows: Elongation after rupture is no less than 14% and its bending rupture energy is no less than 27 J at a temperature not greater than 20 °C according to the clause 7.5 of the annex I of PED 97/23/EC.

ДОЛЯ ХИМИЧЕСКИХ ЭЛЕМЕНТОВ, В % / CHEMICAL COMPOSITION, %

плавка № Heat No.	C	Mn	Si	P	S	Cr	Ni	Mo		
912361	0,030	1,11	0,31	0,034	0,016	17,10	11,00	2,06		

TÜV SÜD TÜV TÜV

дата/date 08.11.2004

эксперт/inspector Э1 V.Chaplitskiy

003

108

DMV STAINLESS Italia s.r.l

Via Pio, 30 24062 Costa Volpino (BG)
Tel : 035.975.011 - Fax :035.971624
e-mail: dmvitaly@dmv-stainless.com

DMV

INSPECTION CERTIFICATE
CERTIFICATO DI COLLAUDO

3.1.B - EN 10204 (1992+A1:1997

No/N° 02.06056
Page/pagina 1/2

Purchaser / Cliente	ELVINOX SRL .
Address / Indirizzo	LOCALITA'CASCINA FAUSTINA ALBAIRATE .
Customer Order / Ordine Cliente	A2-001223 date 03/09/2002 .
DMV Ref. Order / Item . Commessa / Pos	0000206612/000004 .
Part number / Part number	
Product / Tipo di prodotto	

Seamless Stainless Steel Cold Finished Pipes Solution Annealed Free From Scale Plain Ends Square Cut Deburred
Tubi s.s. Inox a Freddo (Pipes) Solubilizzazione Libera da Ossido Taglio a Squadra Estr. Lisce Sbav

Specification / Norme	ASTM A 312-00B ASME SA-312 ED. 2001 DIN 17458 PK1 07.85 NF A 4911T 09.86
Grade / Acciaio	TP316 TP316L 1.4401 1.4404 Z 2 CND 17-12 Z 6 CND 17-11
Tolerances / Tolleranze	ASTM A 312-00B AW
Marking Marcature	{LOGO_DMV} ASTM/ASME A/SA-312 -117-TP316 TP316L 1.4401/1.4404 Z2CND1712/Z6CND1711 SML HS1 H. {HEAT} NPS 1 1/2 SCH 5S DMV-I IF BUNDLE {BUNDLE}

Heat / Coil	No / N°	Weight / peso	Total length / lg.	OD / DE	W. Th. / Sp	Length / lg.
470012	39	805,00 Kg	253,00 m	NPS 1 1/2	SCH 5S	5162/7315 mm
Tot.	39	805,00 Kg	253,00 m			

Heat / Colata 470012 Melting Process / Fusione Electric / Elettrico + VOD

Chemical analisys / Analisi chimica (%)

	C	Si	Mn	P	S	Cr	Cu	Mo	Ni	B
Min						16.500		2.000	11.000	
Max	0.030	1.0000	2.00	0.040	0.0300	15.000	1.000	2.400	12.500	0.0015
Heat / Colata	0.013	0.3000	1.59	0.029	0.0030	16.590	0.250	2.010	11.230	0.0009

Mechanical and Metallurgical Properties / Proprietà meccaniche e metallurgiche

Tensile test / Trazione (at 20 °C)

	Direct. Long/Trans	Y.S. 0,2% Rp 0,2% MPa	Y.S. 1,0% Rp 1,0% MPa	U.T.S. Rm MPa	El 5d All 5d %	El 50 mm All 50mm %
Min		205.00	240.00	515.00	45.00	35.00
Max				690.00		
No / N° 98931	L	306.57	340.00	608.67	47.14	40.40
No / N° 98951	L	281.52	316.72	601.17	51.43	46.00
No / N° 98954	L	291.76	322.95	600.57	52.57	46.42
No / N° 99037	L	314.92	346.69	602.21	49.71	46.20
No / N° 99038	L	324.31	357.86	615.07	47.71	41.00

HARDNESS TEST / Durezza
No / N° 98931 Required / Richiesto HRB max 90,00 Result / Ottenuto 80,00 / 81,00
No / N° 98951 Required / Richiesto HRB max 90,00 Result / Ottenuto 80,00 / 81,00
No / N° 98954 Required / Richiesto HRB max 90,00 Result / Ottenuto 79,00 / 80,00
No / N° 99037 Required / Richiesto HRB max 90,00 Result / Ottenuto 81,00 / 82,00
No / N° 99038 Required / Richiesto HRB max 90,00 Result / Ottenuto 80,00 / 81,00

inoxpoint srl
Via Zecca, 138/N
36047 MONTEGALDA (VI)
Tel. 0444.737619 - Fax 0444.737531
Part. IVA 03710130283

E.Z.
T S
144

N° di rif.
Ref. N° 24

INOXPOINT SRL 002

104

DMV STAINLESS Italia s.r.l

Via Pia, 39 24062 Costa Volpino (BG)
Tel.: 035.975.811 - Fax 035.971624
e-mail: dmvitaly@dmv-stainless.com

INSPECTION CERTIFICATE
CERTIFICATO DI COLLAUDO

No/N° 02.05055

Page/pagina 2/2

3.1.B - EN 10204 :1992+A1:1997

FLARING TEST / *Allargamento*	Required *Richiesto* NF A 49-656	Result / *Ottenuto* OK / OK
RING EXPANDING TEST / *Mandrinatura anello*	Required *Richiesto* DIN 50 137	Result / *Ottenuto* OK / OK
FLATTENING TEST / *Schiacciamento*	Required *Richiesto* ASTM A 999	Result / *Ottenuto* OK / OK
CORROSION TEST / *Corrosione*	Required *Richiesto* ASTM A 262 PR E	Result / *Ottenuto* OK / OK
CORROSION TEST / *Corrosione*	Required *Richiesto* EN ISO 3651-2 A PR part 2 met. A	Result / *Ottenuto* OK / OK
CORROSION TEST / *Corrosione*	Required *Richiesto* NF A 05115 T1	Result / *Ottenuto* OK / OK

Other tests and declarations / *Altre prove e dichiarazioni*

Heat treatment / *Trattamento termico* 1070°C	OK / OK
PMI examination / *Controllo meccanizzato*	OK / OK
Visual and dimensional examination / *Controllo visivo e dimensionale*	OK / OK
Eddy current testing / *Controllo Eddy current* ASTM A 999	OK / OK

Material in accordance with / *Materiale in accordo a* NACE MR 01.75 2000 (HRC<=22)

No weld repair
Nessuna riparazione mediante saldatura

Tubes are free from mercury contamination
I tubi sono esenti da contaminazione da mercurio o suoi composti

We certify that the delivered products comply with the request of the order
Si certifica che il materiale spedito è in conformità alla richiesta dello ordine

Date / *data* 03-Oct-2002

Mill inspector / *Controllo qualità Sig* F. RAZZITTI

inoxpoint srl
Via Zocco 138/B
36047 MONTEVIALLA (VI)
Tel. 0444.737619 Fax 0444.781331
Part. IVA 03203290283

Confirmation with reference to Pressure Equipment Directive 97/23/EC:
The validity of operates a quality management system that has undergone a specific assessment for materials for pressure equipment and is certified by a competent body (TUV CERT.nbr. 7920/QM/MUC)

Dichiarazione riguardante la direttiva apparecchiature a pressione 97/23/EC:
La validità della stessa applica un sistema di gestione della qualità che è stato oggetto di una valutazione specifica per i materiali per apparecchi a pressione ed è certificato da un organismo competente (TUV-CERT.nbr. 7920/QM/MUC)

This document is issued by the company subject to its General Conditions of Supply. For these conditions, see www.dmv-stainless.com. Any liability of DMV STAINLESS Italia s.r.l. is excluded. Any liability for any damage resulting from the use of this document is excluded.

Questo documento è emesso dalla società sotto la propria responsabilità ed è soggetto alle sue Condizioni Generali di Fornitura. Per queste condizioni, vedi www.dmv-stainless.com. Ogni responsabilità di DMV STAINLESS Italia s.r.l. è esclusa. Ogni responsabilità per qualsiasi danno risultante dall'uso di questo documento è esclusa.

DMV STAINLESS Italia s.r.l. ISO 9001 - IGQ N° .9408

E.Z.
T S
144

110

DMV STAINLESS Italia s.r.l

Via Pio, 30 24062 Costa Volpino (BG)
Tel : 035.975.811 - Fax :035.971624
e-mail: dmvitaly@dmv-stainless.com

INSPECTION CERTIFICATE
CERTIFICATO DI COLLAUDO

3.1.B - EN 10204 : 1991+A1 : 1995

No/N° 05.01986

Page/pagina 1/2

2870.010

Purchaser / *Cliente*	ELVINOX SRL .
Address / *Indirizzo*	LOCALITA'CASCINA FAUSTINA ALBAIRATE .
Customers Order / *Ordine Cliente*	AS-007574 date 21/02/2005 .
DMV Ref. Order / Item . *Commessa / Pos*	0000215262/000003 .
Part number / *Part number*	N.A.

Product / *Tipo di prodotto*

Seamless Stainless Steel Cold Finished Pipes / *Tubi s.s. Inox a Freddo (Pipes)* — Solution Annealed / *Solubilizzazione* — Free From Scale / *Libero da Ossido* — Plain Ends Square Cut Deburred / *Taglio a Squadra Estr. Lisce Sbav.*

Specification / *Norme*	NF A 49117 09.85 ASTM A 312-00B DIN 17458 PK1 07.85 ASME SA-312 ED. 2001
Grade / *Acciaio*	Z 2 CND 17-12 Z 6 CND 17-11 TP316 TP316L 1.4401 1.4404
Tolerances / *Tolleranze*	ASTM A 312-01A AW
Marking / *Marcatura*	(LOGO DMV) ASTM/ASME A/SA 312 -117- Z2CND1712/Z6CND1711 1.4401/1.4404 TP316(TP316L H)S1 SEAMLESS H.(HEAT) NPS 1 1/2 SCH 5S 48,3 x1,80 DMV-I IF BUNDLE (BUNDLE)

Heat / Col	No / N°	Weight / peso	Total length / lg.	OD / DE	W. Th. / Sp	Length / lg.
F02840	19	354,00 Kg	111,00 m	NPS 1 1/2	SCH 5S	5152/6500 mm
Tot.	19	354,00 Kg	111,00 m			

Heat / *Colata* F02840 Melting Process / *Fusione* Electric / *Elettrica* + AOD

Chemical analisys / *Analisi chimica* (%)

	C	Si	Mn	P	S	Cr	Cu	Mo	Ni	B
Min						16.500		2.000	11.000	
Max	0.030	1.0000	2.00	0.040	0.0300	18.000	1.000	2.400	12.500	0.0015
Heat / Colata	0.014	0.4500	1.63	0.025	0.0050	16.520	0.400	2.010	11.220	0.0009

Mechanical and Metallurgical Properties / *Proprietà meccaniche e metallurgiche*

Tensile test / *Trazione* (at 20 °C)

	Direct.	Y.S. 0,2% Rp 0,2%	Y.S. 1,0% Rp 1,0%	U.T.S. Rm	El 5.65VSo All 5.65VSo	El 50 mm All 50mm
	Long/Trans	MPa	MPa	MPa	%	%
Min		205.00	240.00	515.00	45.00	35.00
Max				690.00		
No / N° 174577	L	342.82	371.70	619.05	49.43	46.00

mt. 12,51

E.Z. T S 139

HARDNESS TEST / *Durezza*

No / N° 174577/1/2/3/4/5 Required / *Richiesto* HRB max 90,00 Result / *Ottenuto* 82,00 / 83,00

FLARING TEST / *Allargamento*

Required / *Richiesto* NF A 49-856 — Result / *Ottenuto* OK / OK

RING EXPANDING TEST / *Mandrinatura anello*

Required / *Richiesto* DIN 50 137 — Result / *Ottenuto* OK / OK

FLATTENING TEST / *Schiacciamento*

Required / *Richiesto* ASTM A 999 — Result / *Ottenuto* OK / OK

CORROSION TEST / *Corrosione*

Required / *Richiesto* ASTM A 262 PR E — Result / *Ottenuto* OK / OK

N° di rif. Ref. N° 25

111

DMV STAINLESS Italia s.r.l

Via Pila, 39 24052 Cesto Velpino (BG)
Tel : 035.975.811 - Fax :035.971024
e-mail: dmvitaly@dmv-stainless.com

No/N° 05.01986

Pagina/pagina 2/2

INSPECTION CERTIFICATE
CERTIFICATO DI COLLAUDO

3.1.B - EN 10204 : 1991+A1 : 1995

CORROSION TEST / *Corrosione*
Required / *Richiesto* EN ISO 3651-2 A PR part2 mat. A — Result / *Ottenuto* OK / OK

CORROSION TEST / *Corrosione*
Required / *Richiesto* NF A 05159 T1 — Result / *Ottenuto* OK / OK

Other tests and declarations / *Altre prove e dichiarazioni*

Heat treatment / *Trattamento termico* 1070°C	
Antimixing checked by PMI / *Controllo antimiscelamento mediante PMI*	OK / OK
Visual and dimensional examination / *Controllo visivo e dimensionale*	OK / OK
Eddy current testing / *Controllo Eddy current* ASTM A 999	OK / OK
Material in accordance with / *Materiale in accordo a* NACE MR 01.75 2000 (HRC<=22)	OK / OK

No weld repair
Nessuna riparazione mediante saldatura
Tubes are free from mercury contamination
I tubi sono esenti da contaminazione da mercurio o suoi composti
DMV declares that the product is in compliance with the order
La DMV dichiara che il prodotto è in conformità all'ordine
The delivered material has been producted and tested on the internal order/item n° 0004042645/000001
Il materiale prelevato è stato prodotto e testato sul ordine/posizione di produzione interno n° 0004042645/000001

The material is in accordance to EN 10216-5
Il materiale è conforme alla EN 10216-5

Date / *data* 03-May-2005
Mill Inspector / *Controllo qualità Sig* F. RAZZITTI

inoxpoint srl
Via Zocco, 108/N
36047 MONTEGALDA (VI)
Tel. 0444.737819 - Fax 0444.737331
Part. IVA 03700130283

E.Z.
T 5
139

Confirmation with reference to Pressure Equipment Directive 97/23/EC:
The works operates a quality management system that has undergone a specific assessment for materials for pressure equipment and is certified by a competent body (TUV-CERT.No: 70/2002/MUC)

Dichiarazione riguardante la direttiva apparecchiature a pressione 97/23/EC:
Lo stabilimento applica un sistema di gestione della qualità che è stato oggetto di una valutazione specifica per i materiali per apparecchi a pressione ed è certificato da un organismo competente (TUV-CERT.No: 70/2002/MUC)

This certificate is issued by a computerized system and is valid without signature. In case of the original certificate would refused a copy of it, to avoid attack its conformity to the original one, taking upon ourself the responsibility for any misuse or evil attempt use. Any alteration on/or falsification will be subject to the law

Questo certificato è rilasciato da un sistema computerizzato ed è valido senza firma. Nel caso il possessore dell'originale ne rifiuti una copia, deve affermare di non trarne in contrasto, assumendosi la responsabilità per usi illeciti o contraffazioni non consentiti. Alterazioni e/o falsificazioni saranno perseguite a termine di legge

DMV STAINLESS Italia s.r.l. ISO 9001 - IGQ N° .9408

DMV STAINLESS Italia s.r.l

Via Piò, 30 24062 Costa Volpino (BG)
Tel : 035.976.611 - Fax :035.971624
e-mail: dmvitaly@dmv-stainless.com

DMV

INSPECTION CERTIFICATE
CERTIFICAT DE RECEPTION
ABNAHMEPRÜFZEUGNIS
3.1 - EN 10204 : 2004

No/N°/Nr.
06.00487
Page/page/Seite 1/3

121

Purchaser / *Client* / Besteller	**ThyssenKrupp Schulte GmbH .**
Address / *Adresse* / Adresse	**Borsigstr. 2 Ratingen .**
Customers Order / *N° de commande client* / Kundenbestellung	**RP8-5400455349 date 25/08/2005 .**
DMV Ref. Order / Item / *N° comm DMV/Poste* / Auftragsnummer	**0000217761/000002 .**
Part number / *Part number* / Teilenummer	**EN01030024104A .**

Product / *Type de produit* / Erzeugnis

Seamless Stainless Steel Cold Finished Pipes **Solution Annealed In Bright Condition Plain Ends Square Cut Deburred**
Pipes Acier Inox Sans Soudure Finis a Froid *Solubilisés* *Recuit brillant (sous* *Coupés d'equerre, lisses, ébavurés*
Kaltgefertigte, nahtlose Edelstahlrohre Lösungsgeglüht Metallisch blank Enden, glatt, abgeschnitten

Specification / *Spécifications* / Liefervorschriften
AD 2000 W2:2004 EINBAUROHRE ASME SA-312 ED. 2004 DIN 17458 PK1 07.85 NF A 49117 09.85 ASTM A 312-04b

Grade / *Nuances* / Stahlsorten
1.4401 1.4404 Z 2 CND 17-12 Z 6 CND 17-11 TP316 TP316L
Tolerances / *Tolerances* / Toleranzen
EN 10305-1:2002 ASTM A 269-04 AW
Marking / *Marquage* / Kennzeichnung
(LOGO_DMV) ASTM/ASME A/SA 312 1.4401/1.4404 TP316/TP316L Z2CND1712/Z6CND1711 MS1 SEAMLESS NH/ET H.(HEAT) NPS 1/8 x SCH 80S 10,3 x 2,41 TUV DMV-I IF BUNDLE (BUNDLE)

Heat	No	Weight	Total length	OD	W. Th.	Length
Coulée/Schmelze	N°/Nr.	Masse/Gewicht	Long. tot./Glg.	DE/AD	Ep./WD	Longueur/Länge
QD266	84	246,00 Kg	525,08 m	NPS 1/8	SCH 80S	6000/7000 mm
Tot.	84	246,00 Kg	525,08 m	ϕ 10,2	2,41	

Heat / *Coulée* / Schmelze **QD266**
Melting Process / *Elaboration* / Erschmelzungsart **Electric** / *Electrique* / Elektrostahl **+ VOD**
Chemical analisys / *Caractéristiques chimiques* / Chemische Zusammensetzung **(%)**

	C	Si	Mn	P	S	Cr	Cu	Mo	Ni	B
Min						16.500		2.000	11.000	
Max	0.030	1.0000	2.00	0.040	0.0300	18.000	1.000	2.400	12.500	0.0015
Heat	0.016	0.3560	1.89	0.017	0.0053	17.200	0.128	2.090	11.110	0.0011

Mechanical and Metallurgical Properties
Caractéristiques Mécaniques et Métallurgiques / Mechanische und metallurgische Kennwerte

Tensile test / *Traction* / Zugversuch **(at 20 °C)**

	Direct.	Y.S. 0,2%	Y.S. 1,0%	U.T.S.	El 5,65VSc	El 50 mm
		Rp 0,2%	Rp 1,0%	Rm		
	Long/Trans	MPa	MPa	MPa	%	%
Min		205.00	240.00	515.00	45.00	35.00
Max				690.00		
No 217981	L	335.54	370.15	654.53	48.89	48.00

3870083
E.Z.
T S
149
mt 6,95

HARDNESS TEST *Dureté* Härteprüfung
No/ *N°* /Nr. **217981/1/2/3/4/5 Required/** *Imposition* /Erforderlich **HRB max 90,00 Result/** *Resultat* /Ergebnis 83,00/84,00
RING FLATTENING TEST *Aplatissement* / Ringfaltversuch
Required / *Imposition* / Erforderlich **DIN 50 136** **Result** / *Resultat* / Ergebnis **OK** / *Bon* / OB

N° di rif.
Ref. N° 31

DMV STAINLESS Italia s.r.l
Via Pio, 30 24062 Costa Volpino (BG)
Tel : 035.975.811 - Fax :035.971624
e-mail: dmvitaly@dmv-stainless.com

DMV STAINLESS

INSPECTION CERTIFICATE
CERTIFICAT DE RECEPTION
ABNAHMEPRÜFZEUGNIS
3.1 - EN 10204 : 2004

No/N°/Nr.
06.00487
Page/page/Seite 2/3

(122)

FLATTENING TEST / *Aplatissement* / Faltversuch	
Required / *Imposition* / Erforderlich **ASTM A 999 NF A 49-853**	**Result** / *Resultat* / Ergebnis **OK** / *Bon* / OB
CORROSION TEST / *Corrosion* / Korrosionstest	
Required / *Imposition* / Erforderlich **ASTM A 262 PR E**	**Result** / *Resultat* / Ergebnis **OK** / *Bon* / OB
CORROSION TEST / *Corrosion* / Korrosionstest	
Required / *Imposition* / Erforderlich **EN ISO 3651-2 A PR part 2 met. A**	**Result** / *Resultat* / Ergebnis **OK** / *Bon* / OB
CORROSION TEST / *Corrosion* / Korrosionstest	
Required / *Imposition* / Erforderlich **NF A 05159 T1**	**Result** / *Resultat* / Ergebnis **OK** / *Bon* / OB

Other tests and declarations / *Autres essais et Déclarations* / Sonstige Prüfungen und Bestätigungen

Heat treatment	**1070°C**	
Traitement thermique	**1070°C**	
Wärmebehandlung	**1070°C**	
Holding time 2 min/mm followed by rapid cooling		
Temps de maintien 2 min/mm suivi par refroidissement rapide		
Haltszeit 2 min/mm mit schneller Abkühlung		
Antimixing checked by PMI		**OK**
Controle anti-mélange par PMI		*Bon*
Prüfung auf Werkstoffverwechselung		OB
Visual and dimensional examination		**OK**
Examen visuel et dimensionel		*Bon*
Sichtigung und Masskontrolle		OB
Eddy current testing	**SEP 1925**	**OK**
Controle courants de Foucault	**SEP 1925**	*Bon*
Wirbelstromprüfung	**SEP 1925**	OB

No weld repair
Aucune réparation par soudure
Keine Reparaturschweissung

Tubes are free from mercury contamination
Pas de contamination par le mercure ou l'un de ses composants
Rohre sind frei von Quecksilberverunreinigungen

DMV declares that the product is in compliance with the order
DMV déclare que le produit est conforme à la commande
DMV bestaetigt, Dass das Produkt nach dem Auftrag ist

Material in accordance with AD 2000 W 10: 2003+TRD100
Matériel conforme à la norme AD 2000 W 10: 2003+TRD100
Material entspricht AD 2000 W 10: 2003+TRD100

The material is in accordance to EN 10216-5
Matériel conforme à la norme EN 10216-5
Material entspricht den EN 10216-5 Vorgaben

Material in accordance with NACE MR 01-75/2003 (HRC<=22)
Matériel conforme à la norme NACE MR 01-75/2003 (HRC<=22)
Material entspricht NACE MR 01-75/2003 (HRC<=22)

DMV STAINLESS Italia s.r.l
Via Pisa, 30 24052 Costa Volpino (BG)
Tel: 035.975.611 - Fax 035.971634
e-mail: dmvitaly@dmv-stainless.com

DMV

INSPECTION CERTIFICATE
CERTIFICAT DE RECEPTION
ABNAHMEPRÜFZEUGNIS
3.1 - EN 10204 : 2004

No/N°/Nr. 06.00487 (127)
Page/page/Seite 3/3

Validation by manufacturer' s representative
Validé par le représentant du producteur
Prüfung durch Vertreter des Herstellers
Mill inspector / *Contrôle Qualité* / Der Werkssachverständige **F. ANNIBALI**
Date / *date* / date **01-Feb-2006**

nfirmation with reference to Pressure Equipment Directive 97/23/EC:

The works operates a quality management system that has undergone a specific assessment for materials for pressure equipment and is certified by a competent body (TUV-CERT.No: 70/2002/MUC)

Confirmation concernant la Directive Equipements sous Pression 97/23/EC:

L'usine applique un système de management de la qualité qui a fait l'objet d'une évaluation spécifique pour les matériaux pour équipements sous pression et qui est certifié par un organisme compétent (TUV-CERT.No: 70/2002/MUC)

Bestätigung in Bezug auf Druckgeräterichtlinie 97/23/EG:

Das Werk wendet ein Qualitätsmanagementsystem an, das in Bezug auf Werkstoffe für Druckgeräte einer spezifischen Bewertung unterzogen wurde und von einer zuständigen Stelle (TÜV-ZERT. Nr. 70/2002/MUC) zertifiziert ist.

This certificate is issued by a computerized system and is valid without signature. In case the owner of the original certificate would release a copy of it, he must attest its conformity to the original one, taking upon himself the responsibility for any unlawful or not allowed use. Any alteration and/or falsification will be subject to the law

Le certificat est rédigé par un système d'ordinateur et il est valable sans signature. Au cas où le possesseur de l'original délivrera une copie, il devra attester la conformité en son nom, en s'endossant toute la responsabilité pour des usages illicites ou interdits. Toute altération ou contrefaction seront susceptibles d'entraîner des poursuites légales.

Dieses Zeugnis ist durch ein automatisches System erstellt und ohne Unterschrift gültig. Im Falle, dass der Eigentümer des Originalzeugnisses eine Kopie erstellen lässt, muss er die Übereinstimmung mit dem Original bestätigen und übernimmt selbst die Verantwortung für jede nicht erlaubte und illegale Verwendung. Jede Veränderung und/oder Fälschung wird gerichtlich verfolgt werden.

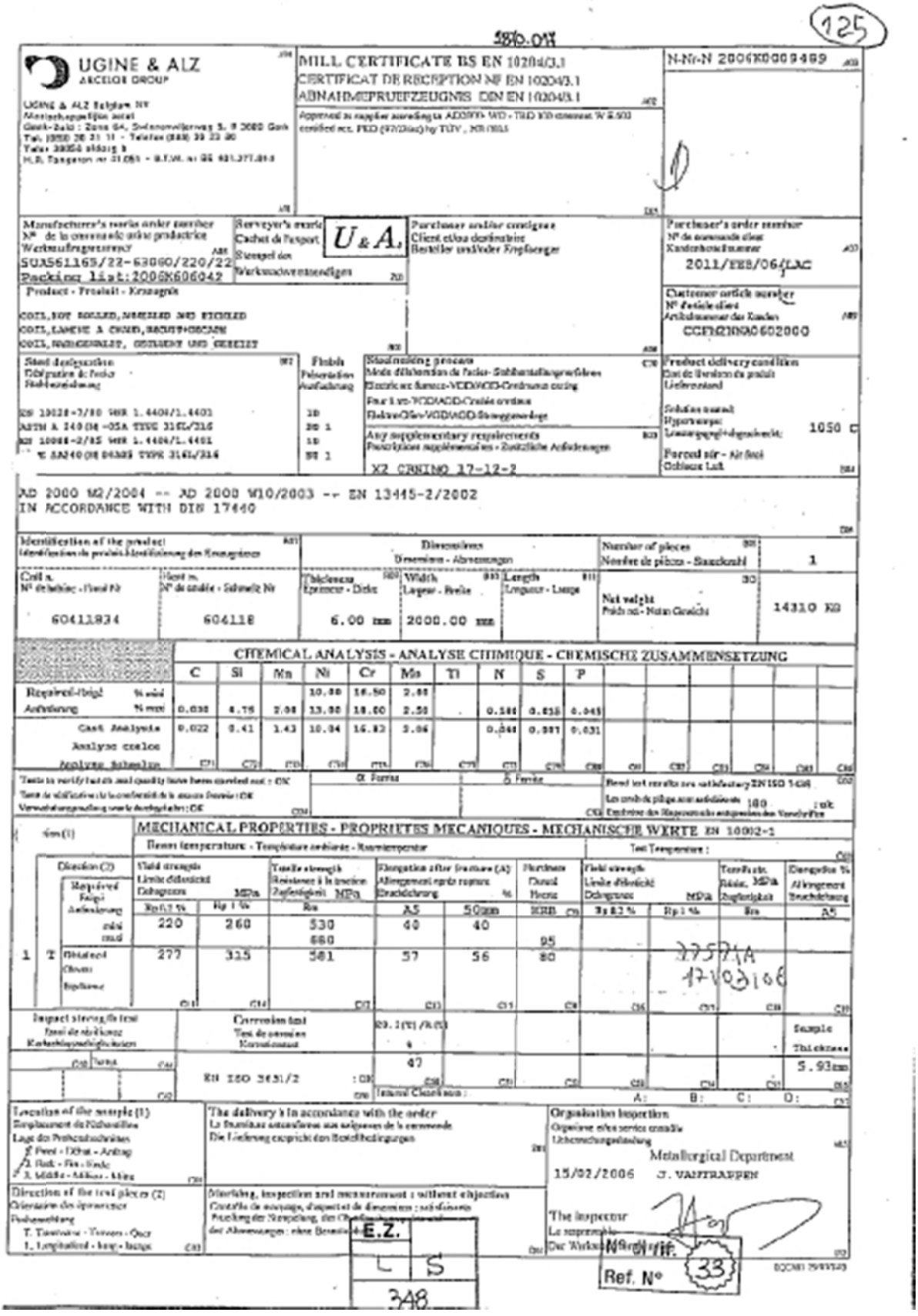

UGINE & ALZ
ARCELOR GROUP

MILL CERTIFICATE BS EN 10204/3.1
CERTIFICAT DE RECEPTION NF EN 10204/3.1
ABNAHMEPRUEFZEUGNIS DIN EN 10204/3.1

N-Nr-N 2006K0009469

Manufacturer's works order number
N° de la commande atelier productrice
Werkauftragsnummer
SUASS1165/22-63060/220/22
Packing list:2006K606042

Surveyor's stamp
Cachet de l'expert
Stempel des Werksachverständigen
U & A.

Purchaser order consignee
Client ordre destinataire
Bestell- und/oder Empfänger

Purchaser's order number
N° de commande client
Kundenbestellnummer
2011/EES/06/LXC

Product - Produit - Erzeugnis
COIL, HOT ROLLED, ANNEALED AND PICKLED
COIL, LAMINE A CHAUD, RECUIT+DECAPE
COIL, WARMGEWALZT, GEGLUEHT UND GEBEIZT

Customer article number
N° article client
Artikelnummer des Kunden
CGEN2INOX602000

Steel designation
Désignation de l'acier
Stahlbezeichnung

EN 10028-7/00 WER 1.4404/1.4401
ASTM A 240(M)-05A TYPE 316L/316
EN 10088-2/05 WER 1.4404/1.4401
X 5CrNiMo17-12-2

Finish
Présentation
Ausführung
2B
2B 1
2B
2B 1

Heat treating process
Mode d'élaboration de l'acier- Stahlherstellungsverfahren
Electric arc furnace-VOD/AOD-Continuous casting
Four à arc-VOD/AOD-Coulée continue
Elektro Ofen/VOD/AOD-Strangguss

Any supplementary requirements
Prescriptions supplémentaires - Zusätzliche Anforderungen
X2 CRNIMO 17-12-2

Product delivery condition
Etat de livraison du produit
Lieferzustand
Solution treated
Hypertrempe
Lösungsgeglüht+abgeschreckt: 1050 °C
Forced air - Air forcé
Schnelle Luft

AD 2000 M2/2004 -- AD 2000 W10/2003 -- EN 13445-2/2002
IN ACCORDANCE WITH DIN 17440

Identification of the product	Dimensions	Number of pieces	
	Dimensions - Abmessungen	Nombre de pièces - Stückzahl	1

Coil n.	Heat n.	Thickness	Width	Length	Net weight	
N° de bobine - Ring N°	N° de coulée - Schmelz Nr	Epaisseur - Dicke	Largeur - Breite	Longueur - Länge	Poids net - Netto Gewicht	
60411834	604118	6.00 mm	2000.00 mm			14310 KG

CHEMICAL ANALYSIS - ANALYSE CHIMIQUE - CHEMISCHE ZUSAMMENSETZUNG

	C	Si	Mn	Ni	Cr	Mo	Ti	N	S	P						
Required-Exigé % min				10.00	16.50	2.00										
Anforderung % max	0.030	0.75	2.00	13.00	18.00	2.50		0.100	0.015	0.045						
Cast Analysis	0.022	0.41	1.43	10.04	16.82	2.06		0.044	0.001	0.031						
Analyse coulée																
Analyse Schmelze																

Tests to verify that the steel quality have been carried out : OK
Tests de vérification de la conformité de la nuance livrée : OK
Verwirklichung geeignete durchgeführt: OK

Ø Forms | Ø Forme

Bend test results are satisfactory EN ISO 148
Les essais de pliage sont satisfaisants
Die Ergebnisse der Biegeversuche entsprechen den Vorschriften

MECHANICAL PROPERTIES - PROPRIETES MECANIQUES - MECHANISCHE WERTE EN 10002-1

Room temperature - Température ambiante - Raumtemperatur | Test Temperature :

Item (1)	Direction (2)	Required Exigé Anforderung	Yield strength Limite d'élasticité Dehngrenze MPa Rp0,2 %	Rp 1 %	Tensile strength Résistance à la traction Zugfestigkeit MPa Rm	Elongation after fracture (A) Allongement après rupture Bruchdehnung % A5	50mm	Hardness Dureté Härte HRB	Yield strength Limite d'élasticité Dehngrenze MPa Rp 0,2 %	Rp 1 %	Tensile str. Résist. MPa Zugfestigkeit Rm	Elongation % Allongement Bruchdehnung A5
		min	220	260	530	40	40					
		max			680			95				
1	T	Obtained Obtenu Erhalten	277	315	581	57	56	80		275MPa		
										17/03/06		

Impact strength test	Corrosion test	KV, J (1) / R (2)					Sample
Essai de résilience	Test de corrosion						Thickness
Kerbschlagzähigkeitsversuch	Korrosionstest						
Temp.		47					5.93 mm
	EN ISO 3651/2 : OK	Internal Check/Contrôle interne :			A:	B:	C: D:

Location of the sample (1)
Emplacement de l'échantillon
Lage des Probenabschnittes
T. Face - Tête - Anfang
B. Back - Fin - Ende
M. Middle - Milieu - Mitte

The delivery is in accordance with the order
La fourniture est conforme aux exigences de la commande
Die Lieferung entspricht den Bestellbedingungen

Organisation inspection
Organisme chargé du service
Überwachungsgesellschaft
Metallurgical Department
15/02/2006 J. VANTRAPPEN

Direction of the test pieces (2)
Orientation des éprouvettes
Probenentnahme
T. Transverse - Travers - Quer
L. Longitudinal - Long - Längs

Marking, inspection and measurement : without objection
Contrôle de marquage, d'aspect et de dimensions : satisfaisants
Prüfung der Kennzeichnung, der Oberfläche und der Abmessungen : ohne Beanstandung

The inspector
Le représentant
Der Werksachverständige

E.Z.
L S
348

Ref. N° 33

2546.034

BRASIMET INDUSTRIES CORPORATION
TATEBAYASHI PLANT, JAPAN

126

2-7-1 SHINJUKU TATEBAYASHI GUNMA JAPAN

Prüf-Nr. T9623-4
(Certificate No.)

Abnahmeprüfzeugnis B

(Inspection Certificate)

Blatt-Nr. 1/5
(Sheet No.)

Bescheinigung über Werkstoffprüfungen3.1B/EN10204
gem. DIN50049
Certificate of Material Inspection 3.1B
(according to DIN50049)

Besteller: TAIKYO SANGYO CO., LTD.
(Customer)

Bestell-Nr.: 21852
(Order No.)

Prüfgegenstand: Nahtlose rostfreie Stahlrohre
(Inspected Article) (Seamless stainless steel pipes)

Werks-Nr.: 1582-3 1581-1
(Mfg. No.) 1581-3 1580-1
1581-2 1578-2
1580-4

Anforderungen: ACC. TO DIN 17458 CL.1-NF A 49-117
(Requirements) ASTM/ASME/SA312/A213C.D.A&P.NACE MR01-75

Werkstoff: AISI 316/316L
(Material)

Ausgabe:
(Edition) 89A

Lieferzustand: h
(Delivery condition)

Erschmelzungsart: E.
(Melting Process)

Kennzeichnung: BRASIMET/SPEC./SMLS/
(Marking) GRADE/SIZE/HEAT NO.

Zeichen des Lieferwerks:
(Brand of the manufacturer)

Werkstoff-Nr.:
(Material)

Stempel des Werkssachverständigen: (F)
(Inspector's stamp)

Umfang der Lieferung
(Delivery Volume)

Datum der Abnahme: OCT. 29, 1998
(Date of Inspection)

Pos.Nr. / Item No.	Stückzahl (pieces)	Gegenstand (Article)	Rohr-Nr. (Tube No.)	Schmelze-Nr. (Heat No.)	Proben-Nr. (Test No.)
	Rohr	(OD) (WT) (L)			
1	270	12.0MM X 1.5MM X 5-7M (1691.1M)	84	V80141	1582-3/1
"	-	" " "	169	V80141	1582-3/2
"	-	" " "	265	V80141	1582-3/3
2	230	12.0MM X 1.0MM X 5-7M (1255.8M)	41	V80241	1581-1/1
"	-	" " "	217	V80241	1581-1/2
3	210	" " " (1160.9M)	72	V80198	1581-3/1
"	-	" " "	193	V80198	1581-3/2
4	134	10.0MM X 1.5MM X 5-7M (857.3M)	55	V80140	1580-1/1

Ergebnis der Prüfung:
(Results of Inspection)

Tatebayashi, den NOV. 1. 1998
(date)

Die gestellten Anforderungen sind lt. Anlage erfüllt.
(The requirements are fulfilled as per enclosure.)

2 Anlagen (Enclosures)
1) Ergebnis der Prüfung (Results of Inspection)
2)
3)
4)

T. Ishikawa
Der Werkssachverständige
(Work's Inspector)

COPIA CONFORME ALL'ORIGINALE
VEMETA INOXSERVICE s.r.l.

Ausgestellt im Einvernehmen mit dem TÜV-Bayern e.V. (.. 1982)
Issued with agreement of TÜV-Bayern e.V. (1. 1982)

N° di rif. 34
Ref. N°

BRASIMET INDUSTRIES CORPORATION
TATEBAYASHI PLANT, JAPAN

127

2-7-1 SHINJUKU TATEBAYASHI GUNMA JAPAN

Prüf-Nr.: T9623-4
(Certificate No.)

Abnahmeprüfzeugnis B

(Inspection Certificate)

Bescheinigung über Werkstoffprüfungen, 3.1B
gem. DIN50049
Certificate of Material Inspection 3.1B
(according to DIN50049)

Blatt-Nr: 2/5
(Sheet-No)

Umfang der Lieferung.
(Delivery Volume)

Pos.Nr. (Item No.)	Stückzahl (pieces)	Gegenstand (Article)	Rohr-Nr (Tube No.)	Schmelze-Nr. (Heat No.)	Probe-Nr. (Test No.)
"	Rohr	(OD) (WT) (L)			
"	-	" " "	130	V80140	1580-1/1
5	140	12.0MM X 1.0MM X 5-7M (792.8M)	26	V80241	1581-2/1
"	-	" " "	133	V80241	1581-2/2
6	154	8.0MM X 1.0MM X 5-7M (985.6M)	100	V80141	1578-2/1
"	-	" " "	132	V80141	1578-2/2
7	253	10.0MM X 1.5MM X 5-7M (1591.19M)	2	V80140	1580-4/1
"	-	" " "	140	V80140	1580-4/2
"	-	" " "	251	V80140	1580-4/3

Tatebayashi , den NOV. 1, 1999
(date)

T. Ishikawa

Der Werkssachverständige
(Work's Inspector)

COPIA CONFORME ALL'ORIGINALE
VENETA INOX SERVICE s.r.l.

BRASIMET INDUSTRIES CORPORATION
TATEBAYASHI PLANT, JAPAN

128

2-7-1 SHINJUKU TATEBAYASHI GUNMA JAPAN

Anlage 1 zum Zeugnis
(Encl. to Certificate No.)

Ergebnis der Prüfungen
(Test Results)

Prüf-Nr.: T9623-4

Blatt-Nr.: 3/5 (1/2)
(Sheet. No.)

1. Besichtigung und Ausmessung: ohne Beanssstandungen (Satisfactory)
(Visual inspection and Dimensional check)
2. Wasserdruckprüfung: 2500PSI 100% ohne Beanssstandung (Satisfactory)
(Hydrostatic test)
3. Ringfaltversuch: A530 ohne Beanssstandung (Satisfactory)
(Flattening test)
4. Aufweitversuch: A530 ohne Beanssstandung (Satisfactory)
(Drift expanding test)
5. Wirbelstromprüfung: ohne Beanssstandung (Satisfactory)
(declaration of eddy current examination)
6. Die Verwechslungsprüfung wurde je Rohrlänge durchgeführt: ohne Beanssstandung (Satisfactory)
(Check against material mix-up was performed)
7. Zugversuch: (DIN 50145) (DIN 50140) Ergebnisse siehe unten
(Results of tensile tests: see below)

Proben Nr. (Specimen No.)	Abmessungen des Probestabs Breite ø Dicke (Size of Test Piece Width or Diameter and wall Thickness) mm	mm	Streck-grenze od. 0,2-grenze (Proof Stress 0.2% offset) KSI	1%-Dehn-grenze (1% Proof Stress)	Zug-festigkeit (Tensile Strength) KSI	Dehnung % auf (Elongation on) Lo=5do	Bemerkungen (Remarks)
Anforderungen: (Spec. Value)			Mind (Min.) 25	Mind (Min.)	70 min	Mind (Min.) 35	HRB 80 MAX
	(OD)	(WT)					
1582-3/1	12.02	1.51	37.4		82.0	63.3	79.0
1582-3/2	11.98	1.47	37.2		81.4	64.0	78.6
1582-3/3	12.03	1.54	37.0		81.5	63.9	78.5
1581-1/1	11.99	0.98	38.1		82.2	63.2	79.1
1581-1/2	12.01	1.03	38.2		82.4	62.8	79.2
1581-3/1	12.04	0.99	37.7		82.0	63.5	76.5
1581-3/2	11.96	1.02	38.3		82.2	62.6	79.4
1580-1/1	9.97	1.52	35.9		79.9	62.5	79.4
1580-1/1	10.01	1.49	37.4		81.6	64.2	78.6
1581-2/1	11.96	0.97	38.5		82.0	63.1	79.2
1581-2/2	12.02	1.00	38.3		83.3	61.2	79.8
1578-2/1	7.98	0.99	36.7		79.6	62.9	79.3
1578-2/2	8.04	1.04	36.3		79.9	63.0	79.2
1580-4/1	10.02	1.49	38.1		82.4	63.3	79.1

Tatebayashi, den NOV. 1. 1998
(date)

T. Ishikawa

Der Werkssachverständige
(Work's Inspector)

COPIA CONFORME ALL'ORIGINALE
VENETA INOXSERVICE s.r.l.

BRASIMET INDUSTRIES CORPORATION
TATEBAYASHI PLANT, JAPAN

129

2-7-1 SHINJUKU TATEBAYASHI GUNMA JAPAN

Anlage 1-1 zum Zeugnis
(Encl. to Certificate No.)

Ergebnis der Prüfungen

(Test Results)

Prüf-Nr. T9623-4

Blatt-Nr.: 4/5
(1/2)
(Sheet. No.)

1. Besichtigung und Ausmessung: (Visual inspection and Dimensional check) — ohne Beansstandungen (Satisfactory)
2. Wasserdruckprüfung: (Hydrostatic test) — 2500PSI 100% ohne Beansstandung (Satisfactory)
3. Ringfaltversuch: A530 (Flattening test) — ohne Beansstandung (Satisfactory)
4. Aufweitversuch: A530 (Drift expanding test) — ohne Beansstandung (Satisfactory)
5. Wirbelstromprüfung: (declaration of eddy current examination) — ohne Beansstandung (Satisfactory)
6. Die Verwechslungsprüfung wurde je Rohrlänge durchgeführt: (Check against material mix-up was performed) — ohne Beansstandung (Satisfactory)
7. Zugversuch: ~~DIN 50145~~ ***** ~~DIN 50146~~ ***** Ergebnisse siehe unten

(Results of tensile tests: see below)

Probe-Nr. (Specimen No.)	Abmessungen des Probestabs Breite ø Dicke (Size of Test Piece Width or Diameter and wall Thickness) mm	mm	Streck-grenze od. 0.2-grenze (Proof Stress 0.2% offset) KSI	1%-Dehn-grenze (1% Proof Stress)	Zug-festigkeit (Tensile Strength) KSI	Dehnung% auf (Elongation on) Lo=5do	Bemerkungen (Remarks) HARDNESS TEST
	Anforderungen: (Spec. Value)		Mind (Min.) 25	Mind (Min.)	70 min	Mind (Min.) 35	HRB BC MAX
	(OD)	(WT)					
1580-4/2	9.97	1.53	35.8		78.4	64.2	78.8
1580-4/3	10.04	1.47	37.4		82.0	63.3	79.0

Tatebayashi den NOV. 1. 1996
(date)

T. Ishikawa

Der Werkssachverständige
(Work's Inspector)

COPIA CONFORME ALL'ORIGINALE
VENETA INOXSERVICE s.r.l.

BRASIMET INDUSTRIES CORPORATION
TATEBAYASHI PLANT, JAPAN

130

2-7-1 SHINJUKU TATEBAYASHI GUNMA JAPAN

Anlage 2 Zum Zeugnis
(Encl. to Certificate No.)
Pr Of-Nr. :T9623-4

8. Schmelzenanalyse: (Heat Analysis) siehe unten (See below)

Blatt-Nr. 5/5
(2/2)
(Sheet No.)

	Schmelzen Nr. (Heat No.)	C	Si	Mn	P	S	Ni	Cr	Mo	Ti	
Richtanalyse (Spec. Analysis)		Max. 0.03	Max. 1.00	Max. 2.00	Max. 0.045	Max. 0.030	10.00-14.00	16.00-18.00	2.0-3.0		
Ermittelte Werte (Value of analysis)	V80141	0.019	0.39	1.73	0.031	0.008	12.80	17.45	2.43		
	V80241	0.016	0.40	1.72	0.028	0.003	12.35	16.53	2.17		
	V80198	0.020	0.39	1.72	0.028	0.006	12.46	16.67	2.19		
	V80140	0.023	0.34	1.73	0.029	0.012	12.92	17.60	2.38		

9. Korrosionsprüfung: (DIN 50914) Das Material ist beständig gegen Interkristalline Korrosion. (The material is resistant against intergranular corrosion)
(Corrosion test)

SATISFACTORY
ASTM E252

Tatebayashi .cos NOV. 1998
(date)

T. Ishikawa
Der Werkscheuerstandige
(Work's Inspector)

COPIA CONFORME ALL'ORIGINALE
VENETA INOX SERVICE s.r.l.

DMV STAINLESS ITALIA s.r.l.
24062 COSTA VOLPINO (BG)

2421-020

INSPECTION CERTIFICATE
(UNI EN 10204 3.1.B)

N. 95/0979

Page 131

CUSTOMER'S ORDER 95/197

ELVINOX SRL

MILL ORDER / ITEM 4211052/011

LOCALITA' CASCINA FAUSTINA
20080 ALBAIRATE MI

PRODUCT SEAMLESS STAINLESS STEEL PIPES-COLD DRAWN-ACC. TO ASTM A 312/ASME SA 312 SEC. II IN TP 316L AND TP 316 BRIGHT ANNEALED PLAIN ENDS

DIMENSIONS:	Lg. From	Lg. To	O.D. mm	W.T. mm
	5500	7000	10,200	2,410

QUANTITY : Nr 163 Kg 465 Ft 3211'11" Lbs 1025,1

TEST N. 39443 HEAT N. 350040

TENSION TEST + 20,0^C
TEST SPEC. : LONGITUDINAL
YIELD POINT 0,2% (MPA): requir min 205 SECTION 59,0 mm2
TENSILE STRENGTH (MPA): requir min 515 result 383,
ELONGATION : CALIBRATED ON 2" 50,0 mm result 620,
(%): requir.min 35,0

TECNOLOGICAL TESTS PERFORMED WITH SATISFACTORY RESULTS
FLATTENING TEST

HEAT N. 350040

HEAT ANALYSIS %

C	0,020	Mn	1,46	Si	0,28	P	0,028	S	0,005	Ni 11,69
Cr	17,03	Mo	2,14							

LEAK-TIGHTNESS TEST PERFORMED WITH SATISFACTORY RESULTS BY:
HYDRAULIC TEST PRESSURE 17,0 MPA

VISUAL AND DIMENSIONAL CONTROL OF THE TUBES HAS BEEN CARRIED OUT WITH SATISFACTORY RESULT

REMARKS:

THE STEEL IS PRODUCED BY ELECTRIC FURNACE

THE TUBES HAVE BEEN SOLUTION TREATED AT 1070^C

ALL TUBES HAVE BEEN SUBJECTED TO P.M.I. EXAMINATION WITH SATISFACTORY RESULT.

THE TESTS HAVE BEEN SELECTED BEFORE CUTTING TUBES TO FINISHED LENGTH

N° di rif. Ref. N° 35

Questo certificato è emesso da un sistema computerizzato ed è valido senza firma. Il certificato originale riportato il marchio in colore blu sopra la dicitura. Il possessore dell'originale, qualora ne faccia copia, deve attestare a sua volta la conformità, assumendosi ogni responsabilità per tali illeciti o comportamenti non consentiti dalla DMV Stainless Italia s.r.l.

Alterations and/or falsifications are punishable according to law.

This certificate is issued by a computerized system and is valid without signature. On the original certificate the trade mark has been registered along the diagonals stamped in case the owner of the original certificate would require a copy of it. The issuer shall in no way be held responsible for any unlawful or not allowed use.

Any alteration and/or falsification will be subject to the law.

La certificat est délivré par un système informatique et il est valable sans signature. Le certificat original marqué de la marque de couleur bleu en diagonal. Dans le cas où le possesseur de l'original désirerait en avoir une copie, il devra attester la conformité de celle-ci, en s'assumant toute la responsabilité pour des copies illicites ou non autorisées par DMV Stainless Italia s.r.l.
Toute falsification ou contrefaçon sera poursuivie à la rigueur de la loi.

DATE 21/10/1995

D.M.V. STAINLESS ITALIA S.R.L.

CHIEF OF INSPECTION DPT
Ivan NEMBRINI

T.T.I. - Tubacex Tubos Inoxidables, S.A.

(132)

TUBACEX

MILL TEST CERTIFICATE EN 10204 3.1.B	Number: 121812 Page: 1 / 2	Rev: 0
	Date: 11.07.2001	11.07.2001

CUSTOMER :RACCORTUBI, S.R.L. PO :551 29/3/01 OUR REFERENCE:T614
STANDARD :A-SA312M-00 ED.98
ADDIT.SPECS :NACE MR01.75-00
GRADE :TP316-316L DIMENSIONS :60,33 X 2,77
MATERIAL :SEAMLESS STAINLESS STEEL TUBE
COLD ROLLED; PASSIVATED;
PLAIN ENDS SQUARE CUT;

71150

----ITEM----- YOUR	TTI.	-HEAT- NR.	NO. OF PIECES	---WEIGHT-- KG	-TOTAL LENGTH-	--UNIT LENGTH--
	25	29759	126	3334	841,67	5 - 7 MTR
	25	29794	221	5788	1.445,74	5 - 7 MTR

RAW MATERIAL

MELTING PROCESS: ELECTRIC FURNACE + A.O.D FROM: ACERALAVA
PEELED BARS; MACROETCH TESTING: GOOD;

(1)	C	Mn	Si	P	S	Ni	Cr	Mo	Cu	B
L 29759	0,021	1,52	0,450	0,027	0,0010	11,20	16,80	2,16	0,65	0,0013
L 29794	0,022	1,43	0,470	0,028	0,0010	11,10	16,75	2,15	0,39	0,0008
C 29794	0,023	1,42	0,480	0,028	0,0010	11,05	16,70	2,15	0,39	0,0008
C 29759	0,020	1,52	0,450	0,028	0,0010	11,10	16,75	2,18	0,64	0,0013

(1) L: LADLE; C: PRODUCT

HEAT TREATMENT

SOLUTION ANNEALED 1100 °C WATER QUENCHED

* TESTS * NR. HEAT	NR. TEST	TEMP.	TENSION MPA RM	RP 0,2	RP 1,0	% A	% Z	IMPACT TESTS TEMP.	MINIMUM	AVERAGE	HARDNESS HRB	
29759	79	20	548,0	270,0	305,0	60,0					62	63
29794	84	20	543,0	253,0	288,0	60,0					75	76
29794	85	20	557,0	266,0	294,0	58,0					74	75

TECHNOLOGICALS

FLATTENING TEST: GOOD
FLARING TEST: GOOD
RING EXPANDING TEST: GOOD

METALLURGICAL TEST

INTERGRANULAR CORROSION: A-262 PRACT."E", DIN 50914, NF A05-159 T1: GOOD

NON DESTRUCTIVE TEST

100 % HYDROSTATIC PRESSURE TESTED AT 98 BAR , DURING 6 SEC, GOOD
STEEL GRADE CHECKED ON EACH TUBE BY SPECTROGRAPHY
DIMENSIONAL CHECKING ON EACH TUBE, SATISFACTORY
VISUAL INSPECTION ON EACH TUBE, SATISFACTORY

OTHER MATERIAL SPECIFICATIONS

DIN 17458 PK1 / NF A49117-07 1.4401-1.4404 / Z2 CND 17.12

MARKS

TXA
TUBACEX 60,33 X 2,77 ASTM-ASME A-SA 312 TP316-316L - DIN 17458 PK1
1.4401-1.4404 NF A49-117 Z2 CND 17.12 SMLS HEAT/..... PMI

REMARKS

T.T.I GARANTIT QUE TOUS LES TUBES LIVRES SONT CONFORMES AUX SPEC.S DE L'ARTICLE 15 DE L'ARRETE MINISTERIEL DU 24 MARS 1978 MODIFIE
C<=0,25%, P<=0,05%, S<=0,05%, R<800 N/MM2, E<=0,9 * R

AENOR ER Diagrama Empresa de Calidad — IQNet — TÜV SÜDDEUTSCHLAND

We hereby certify that the material herein described has been manufactured, sampled, tested and inspected in accordance with above standards and specifications and satisfies the order's requirements.
This certificate is issued by a computerized system and it is valid without signature on the original certificate the responsible signature not coloured is stamped.
In case the owner of the original certificate would release a copy of it, he must assist its conformity to the original one, taking upon himself the responsibility for any untowed or not allowed use.

T.T.I.
Tubacex Tubos Inoxidables, S.A.
INGENIERIA DE CALIDAD
Jon Alvarez Zatarra

N° di rif. 36
Ref. N°

Cliente/Customer: ETTORE ZANON S.p.A.
Ordine/Order : 2650037 -16/10/2001- Posiz./Item n.: 2
Descr.: 60.33x2.77 TC229P06030277 ()
Cast/Mark n.: 29794 Qta'/Qty : 33.72 MT
D.d.T. n.:6437 * Certified True Copy * Issued 31-10-01

T.T.I. - Tubacex Tubos Inoxidables, S.A.

(133)

TUBACEX

MILL TEST CERTIFICATE

EN 10204 3.1.B

Number: 221812 Page: 2 / 2	Rev: 0
Date: 11.07.2001	11.07.2001

CUSTOMER :RACCORTUBI, S.R.L. PO :551 29/3/01 OUR REFERENCE:T614
STANDARD :A-SA312M-00 ED.98
ADDIT.SPECS :NACE MR01.75-00
GRADE :TP316-316L DIMENSIONS :60,33 X 2,77
MATERIAL :SEAMLESS STAINLESS STEEL TUBE
COLD ROLLED; PASSIVATED;
PLAIN ENDS SQUARE CUT;

71150

A% (LO=5,65VSO) MIN. 16% EN LONG. R(A _2)>=10500

AENOR ER

IQNet

TÜV

We hereby certify that the material herein described has been manufactured, sampled, tested and inspected in accordance with above standards and specifications and satisfies the order's requirements.
This certificate is issued by a computerized system and it is valid without signature. On the original certificate the responsible's signature has obtained is stamped.
In case the owner of the original certificate would release a copy of it, he must attest its conformity to the original one, taking upon himself the responsibility for any unlawful or not allowed use.

T.T.I.
Tubacex Tubos Inoxidables, S.A.
INGENIERIA DE CALIDAD
Jon Aluga Zubero

Cliente/Customer: ETTORE ZANON S.p.A.
Ordine/Order : 2650037 -16/10/2001- Posiz./Item n.: 2
Descr.: 60.33x2.77 TC229P06030277 ()
Cast/Mark n.: 29794 Qta'/Qty : 33.72 MT
D.d.T. n.:6437 * Certified True Copy * Issued 31-10-01

This present document is issued by optical disk filing system under computerized and controlled Quality Assurance procedure

raccortubi

CERTIFICATE

T.T.I. - Tubacex Tubos Inoxidables, S.A.

TUBACEX

(134)

MILL TEST CERTIFICATE

EN 10204 3.1.B

NUMBER: 238177 AE
DATE: 1/ 1
DATE: 14.05.99

CUSTOMER: RACCORTUBI S.R.L.
OUR REFERENCE: M648
SPEC: TP316-316L
DATE: SEAMLESS STAINLESS STEEL TUBE
PASSIVATED PLAIN ENDS SQUARE CUT; COLD ROLLED;

Y.O.: 512 10.03.99
STANDARD: A-SA312-95A
DIMENSIONS: 60,33 X 2,77

ITEM YOUR	ITEM	HEAT NR.	NO. OF PIECES	WEIGHT KG.	TOTAL LENGTH M.	UNIT LENGTH
	013	ZAP	203	5526	1387,10	6 - 8 MTRS.

RAW MATERIAL
MELTING PROCESS: ELECTRIC FURNACE + A.O.D. FROM: ACERALAVA
PEELED BARS: YES; MACROETCH TESTING: GOOD;

HEAT	C	MN	SI	P	S	NI	CR	MO	CU	B	(1)
ZAP	0,018	1,39	0,45	0,028	0,001	11,10	16,70	2,13	0,3600	0,0010	L
ZAP	0,020	1,41	0,45	0,032	0,001	11,15	16,70	2,12	0,3800	0,0010	C

(1) L: LADLE; C: PRODUCT.

HEAT TREATMENT
SOLUTION ANNEALED AT 1050 D.C./WATER QUENCHED

TESTS - TENSION - IMPACT TESTS HARDNESS

HEAT NR.	TEST NR.	TEMP.	MPA RM	MPA RP 0,2	MPA RP 1,0	% A	% Z	TEMP.	MINIMUM	AVERAGE	HRD
ZAP	134		541,0	257,0	289,0	72,0					76 80
ZAP	135		556,0	264,0	294,0	70,0					

TECHNOLOGICALS - METALLURGICAL
FLATTENING TEST: GOOD;
INTERGRANULAR CORROSION: ACC. A_263 PRACT. "E": GOOD

NON DESTRUCTIVE
100 % HYDROSTATIC PRESSURE TESTED AT 98 BAR DURING 5 SEC. GOOD
STEEL GRADE CHECKED ON EACH TUBE BY SPECTROGRAPHY
DIMENSIONAL CHECKING ON EACH TUBE, SATISFACTORY
VISUAL INSPECTION ON EACH TUBE, SATISFACTORY

MARKS
TX2
TUBACEX 60,33 X 2,77 ASTM-ASME A-SA 312 TP316-316L DIN 17458 PK1
1.4401-1.4404 NF A49-117 Z2 CND 17 12 SMLS HEAT-... PMI

52285

REMARKS
T. T. I GARANTIT QUE TOUS LES TUBES LIVRES SONT CONFORMS AUX SPEC.S
DE L'ARTICLE 15 DE L'ARRETE MINISTERIEL DU 24 MARS 1978 MODIFIE.
C<=0,25%, P<=0,05%, S<=0,05, R<800 N/MM2, E<=0,9 X R
A% (LO=5,65VSO) MIN, 16% EN LONG. R(A_2)>=10500

SPEC'S.: SP.01 REV.2 ADDENDA C AND NACE MR01.75

AENOR ER Eurocom Registered

EQNet

TÜV SÜDWEST

T.T.I.
Tubacex Tubos Inoxidables, S.A.
INGENIERIA DE CALIDAD

N° di rif. 37
Ref. N°

Cliente/Customer: ETTORE ZANON S.p.A.
Ordine/Order : 2421052 - 13/5/99 Posiz./Item n.: 1
Descr.: 60.33x2.77 ()
Cast/Mark n.: ZAP Qta'/Qty : 20.92 MT
D.d.T. n.: * Certified True Copy * Issued 25-05-99

135

SCHOELLER
BLECKMANN
EDELSTAHLROHR
SEAMLESS-STAINLESS
HANTLOS TUM ERFOLG

ABNAHMEPRÜFZEUGNIS B - INSPECTION CERTIFICATE B
CERTIFICAT DE RECEPTION PAR L'USINE 3.1.B C.C.P.U.
nach/according to OENORM/DIN EN 10 204-3.1.B

Schoeller-Bleckmann
Edelstahlrohr AG
Rohrstrasse 1
A-2630 Ternitz, Austria
Tel: +43 02630/316 469
Fax: +43 02630/316 683

Zert./cert: C21115
Seite/Page: 1/3
Datum/Date: 991004
e-mail: helga.harather@sbar.co.at

Besteller/Purchaser/Commettant
BÖHLER UDDEHOLM ITALIA SPA
DIVISION BÖHLER - FILIALE DI MILANO
VIA PALIZZI 90
IT-20157 MILANO
ITALIA

BÖHLER UDDEHOLM ITALIA SPA
DIVISION BÖHLER - FILIALE DI M
VIA PALIZZI 90
IT-20157 MILANO
ITALIA

Bestell-Nr./Purchaser's Order No/No. de commande: 4500116527

Auftrags-Nr./Works Order No/No. de commande d'usine: 0404073/ 3

Lieferschein/Delivery note/Avis d'expedition: 0404073/ 3 Date: 99-06-14

Erzeugnis/Product/Produit
NAHTLOSE EDELSTAHLROHRE - SEAML. STAINL. STEEL TUBES/PIPES,
SBS MARKE / GRADE A200, 1.4401/1.4404, TP316/TP316L,
TUZ2CND17-12, TUZ4CND17-11,
AUSF. H = KALTGEFORMT, WÄRMEBEHANDELT, GEBEIZT,
FINISH H = COLD FINISHED,HEAT-TREATED,PICKLED,
LIEFERUNG NACH / TECHN. COND. ACC. ASTM A312/A312M-95A,
ASME SECT.II PART.A SA312/SA312M-1998 ED.,
DIN 17458/07.85 PKL.1, NFA 49-117 SEPT.1985, NACE MR0175-98
RACCOLTA M3M ISPESL, TOLERANZEN NACH / TOLERANCES ACC.
EN ISO 1127/03.97 D2/T2, ASTM A530/A530M-96,
ASME SECT.II PART.A SA530/SA530M-1998 ED.,
NFA 49-117/SEPT.1985, EINGEENGTE LÄNGE / RANDOM LENGTH
5200/ 7200 MM

COPIA CONFORME ALL'ORIGINALE
VENETA INOXSERVICE s.r.l.

Lieferung/Descr./Liste descr.:

Pos	Abmessung / Dimensions / Dimensione	Menge / Quantity / Poids	Gewicht / Netweight / Poids net	Stk / Pcs / Pcs	Schmelze / Heat / Coulee	Prüf-Nr / Test-No / No.Epr.
10	60,33 X 2,77 MM / 2"NB X SCH 10S / ISO 60,3 X 2,6 MM	1246,50 M	4768,00 KG	192	292090	108461

Ergebnis der Prüfungen/Test Result/Resultat des essais:
Die gestellten Anforderungen sind erfüllt.
The material had been furnished in accordance to the requirements.
Le material a été trouvé conforme aux exigences.

Zeichen des Lieferwerks:
Grand of Manufacturer: SBS
Marquis de l'Usine:

Zeichen des Prüfers:
Symbol of Inspector
Symbole de l'Inspecteur:

SCHOELLER-BLECKMANN
EDELSTAHLROHR AG

FR. H. HARATHER
(DIR. WERKSSACHVERSTÄNDIGE)
(WORKS INSPECTOR/L'EXPERT DE USINE)

N° di rif.
Ref. N° 38

136

SCHOELLER
BLECKMANN
EDELSTAHLROHR
SEAMLESS-STAINLESS
NAHTLOS ZUM ERFOLG

ABNAHMEPRÜFZEUGNIS B - INSPECTION CERTIFICATE B
CERTIFICAT DE RECEPTION PAR L'USINE 3.1.B C.C.P.U.
nach/according to OENORM/DIN EN 10 204-3.1.B

Schoeller-Bleckmann
Edelstahlrohr AG
Rohrstrasse 1
A-2630 Ternitz, Austria
Tel: +43 02630/316 469
Fax: +43 02630/316 683

Zert./cert: C21115
Seite/Page: 2/3
Datum/Date: 991004
e-mail: helga.harather@sbar.co.at

Chemische Zusammensetzung/Chemical Composition/Composition chimique (%)
Schmelze
Heat

coulee	C	SI	MN	P	S	CR	MO	NI	CO
292090	0,017	0,320	1,570	0,026	0,003	16,910	2,070	11,570	

Mechanische Eigenschaften/Mechanical Properties/Charact. mecaniques

Prüf-Nr Test-No No.Epr.	Proben-Nr. Sample-no. sample-no.		HRB HRB	HV HV
		min		
		max	90	192
108463		1	74	
		2	74	

		TEMP °C	RP0.2 MPA	RP1.0 MPA	RM MPA	A5 %	A2" %
	min		205	240	515	45	35
	max				710		
	1	20	294	323	562	52	46
	101	20	296	333	575	51	46

COPIA CONFORME ALL'ORI
VENETA INOXSERVIC

Ergebnisse weiterer Prüfungen/Further test results/Résultat d'autre essais
AUFWEITVERSUCH: IN ORDNUNG
FLARING TEST: SATISFACTORY
RINGFALTVERSUCH: IN ORDNUNG
FLATTENING TEST: SATISFACTORY
BESTÄNDIGKEIT GEGEN INTERKRISTALLINE KORROSION ENTSPRECHEND
DIN 50914/DIN EN ISO 3651-2 VERF.A: IN ORDNUNG
INTERGRANULAR CORROSION TEST ACCORDING TO
DIN 50914/DIN EN ISO 3651-2 PRACT.A: SATISFACTORY
BESTÄNDIGKEIT GEGEN INTERKRISTALLINE KORROSION ENTSPRECHEND
NFA 05-159: IN ORDNUNG
INTERGR. CORR. TEST ACC. TO NFA 05-159: SATISFACTORY

Ergebnis der Prüfungen/Test Result/Resultat des essais:
Die gestellten Anforderungen sind erfüllt.
The material had been furnished in accordance to the requirements.
Le material a été trouvé conforme aux exigences.

Zeichen des Lieferwerks:
Brand of Manufacturer: SBS
Marques de l'usine:

Zeichen des Prüfers:
Symbol of inspector
Symbole de l'inspecteur:

SCHOELLER-BLECKMANN
EDELSTAHLROHR AG
Harather
FR. H. HARATHER
(DER WERKSSACHVERSTÄNDIGE)
(WORKS INSPECTOR/L'EXPERT DE USINE)

3

137

SCHOELLER
BLECKMANN
EDELSTAHLROHR
NAHTLOS GEZOGEN

ABNAHMEPRÜFZEUGNIS B - INSPECTION CERTIFICATE B
CERTIFICAT DE RECEPTION PAR L'USINE 3.1.B C.C.P.U.
nach/according to GENORM/DIN EN 10 204-3.1.B

Schoeller-Bleckmann
Edelstahlrohr AG
Rohrstrasse 7
A-2630 Ternitz, Austria
Tel: +43 02630/316 469
Fax: +43 02630/316 683

Zert./cert: C21115

Seite/Page: 3/3

Datum/Date: 991004

e-mail: helga.harather@sbor.co.at

BESTÄNDIGKEIT GEGEN INTERKRISTALLINE KORROSION ENTSPRECHEND
ASTM A262 Pract.E: IN ORDNUNG
INTERGR. CORR. TEST ACC. TO ASTM A262 PRACT.E: SATISFACTORY
VERWECHSLUNGSPRUEFUNG AN JEDEM ROHR
MIT "RÖNTGEN-FLUORESZENZ-ANALYSATOR": IN ORDNUNG
MATERIAL IDENTIFICATION TEST ON EACH TUBE/PIPE
BY "X-RAY-FLUORESCENCE-ANALYZER": SATISFACTORY

LÖSUNGSGEGLÜHT BEI / SOLUTION ANNEALED AT
1060°C, 10 MINUTES, WASSER/WQ

HYDROSTATIC TEST AT 80 BAR(1400 PSI ACC.TO ASTM A530):SATIS.
ESSAI HYDRAULIQUE 80 BAR SUR CHAQUE TUBE
(1400 PSI SELON ASTM A530) : SATISFAISANT)

THE TUBES/PIPES CONFORM ALSO TO NACE STANDARD MR0175-98.

BESICHTIGUNG UND NACHMESSUNG: IN ORDNUNG
INSPECTION AND CHECKING OF DIMENSIONS: SATISFACTORY

KENNZEICHNUNG/MARKING:WERKSTOFF/MATERIAL-ABMESSUNG/DIMENSION
SCHMELZE/HEAT NO.-FL NR./LOT NO.-SMLS/S-H-FKL.1

ERSCHMELZUNGSART/STEELMAKING PROCESS: EF+AOD

COPIA CONFORME ALL'ORIGINALE
VENETA INOXSERVICE S.r.l.

Ergebnis der Prüfungen/Test Result/Resultat des essais:
Die gestellten Anforderungen sind erfüllt.
The material has been furnished in accordance to the requirements.
Le material a été trouvé conforme aux exigences.

Zeichen des Lieferwerks:
Brand of Manufacturer:
Marque de l'usine:
SBS

Zeichen des Prüfers:
Symbol of Inspector:
Symbole de l'inspecteur:

SCHOELLER-BLECKMANN
EDELSTAHLROHR AG

FR. H. HARATHER
(QSL-WERKSABNAHMEBEAUFTRAGTER)
(WORKS INSPECTION EXPERT QS GRADE)

GARBON ISTORE SPA P.O. 2421019
TAD JOB N. 1 252797 99 POS. 002 NR 5 MT 30,00 KG 120,00 HEAT/COLATA N.L48474 Pag. 1/1

138

Certificate

CHANGWON SPECIALTY STEEL

Changwon Works
P.O.BOX 25,Changwon,Korea
Telefax:82-551-289-6907

Customer : TAD TUBI ACCAIO E DERIVATI COMMERCIALE SPA

NO. 11454200
Order No: EP8AD54-2

Steel Grade/Specification : A312TP316L ASTM A312-95A

Article : SEAMLESS ST ST TUBES ACC TO ASTM/ASME SA 312 TP 316 / 316L DUAL GRADE AND IN FIXED 6000 MM LENGHT, SOLUTION TREATMENT AND PICKLED, PLAIN ENDS WITH TEST CERT 3.1B

State of Delivery : SOLUTION TREATED. COLD FINISHED, PLAIN END.

Lot No.	Bundle No.	Dimensions O.D NPS	WT SCH	Length	Number of Pc.	Total Length M	Weight KG	Test No.
N:11454-200	SC-04126	2	10S	6M	33	198.00	790	5420-1-5
				TOTAL.	33		790	

Heat No.		Chemical Composition (%) C	Si	Mn	P	S	Ni	Cr	Mo	CO		
Rule	min.						11.00	16.50	2.000			
	max.	.030	.75	2.00	.040	.030	12.50	18.00	2.400	.200		
L48474	L	.021	.34	1.27	.026	.016	11.17	16.94	2.190	.160		
	P	.020	.37	1.27	.028	.018	11.08	17.08	2.120	.150		

Test No.	0.2% OFFSET Mechanical Properties Yield Strength MPA	Tensile Strength MPA	Elongation %	Reduction of Area %	Hardness HRB			Impact Test		
Rule min.	205	515	45.0							
max.		680			90					
5420-1	255	550	55.0		68					
5420-2					67					
5420-3					67					
5420-4					68					
5420-5					67					

Other Test	Bending	Flattening	Flaring	Hydrostatic 1400PSI	Grain Size No.	Decarburized Depth (mm) O.D	I.D	Cleanliness (%) dA	dB+C	dA+B+C
		GOOD		GOOD						

Additional Remarks: CASE NO.: TA.19-4

ORIGINAL

-CERTIFICATE ACC. TO EN 10204 3.1B(DIN 50049 3.1B)
-CERTIFY TO ASTM A312(97ED.) ASME SA312(95ED.&96AD.)TP316/316L,DIN 17458(85ED.) WNR1.4401/1.4404 CLASS2,NFA 49117(85ED.) TU Z 6 CND 17-11/TU Z 2 CND 17-12.
-CORROSION TEST ACC.TO ASTM A262 PRACTICE E(97ED.)/DIN 50914(96ED.)/NFA 05159-T1 (81ED.):GOOD -HARDNESS TEST ACC.TO NACE MR-01-75(97ED.). -P.M.I TEST : GOOD
-MELTING PROCESS:ELECTRIC Y.O.D -NO WELD REPAIR -Y.S(1.0% OFFSET)=285MPA
-HYDROSTATIC TEST HOLDING TIME:10 SEC. -HEAT TREATMENT:5 MIN. AT 1050 C.AND W.Q.
-CHANGWON STEEL HEREBY GUARANTEE THAT ALL PRODUCT HERE CERTIFIED ARE TOTALY CONFORM TO ARTICLE IS DATED IN 24 MARCH 1978 THAT MEANS:C:0.24MAX.,P:0.05MAX. S:0.05MAX., RM:800N/MM2 MAX. RM(A-2):1050N/MM2 MIN.,A%:SUR 5.65VS 16% MIN. E:0.9K,MAX.

We hereby certify, that the material described above has been tested and complies with the terms of the order contract.

JAN.16, 99
Date

Quality Technology Team Manager

TAD COMMERCIALE

QUESTO DOCUMENTO È RIPRODOTTO MEDIANTE UN SISTEMA COMPIUTERIZZATO ED È CONFORME

N° di rif. 39

THIS DOCUMENT IS REPRODUCED BY A COMPUTERIZED SYSTEM AND IS CONFORM TO

SINCERT

Original

WELLSLINK ENTERPRISE LIMITED

(139)

TEL: 886-7-7243031~4
FAX: 886-7-7133623
886-7-7262595
886-7-7259254

5FL, NO. 78 KWANG HWA 2ND RD.,
CHIEN CHEN DIST., KAOHSIUNG
TAIWAN, R.O.C.

URL: www.catamaron.com
E-Mail:
catama@seed.net.tw

MILL TEST CERTIFICATE
CERTIFICATE OF ANALYSIS (INSPECTION CERTIFICATE)

ACCORDING TO EN10204 3.1B

PAGE : 6 OF 9
DATE : AUG.09.2005
P/I NO. : SH50312 (REVISED)
P/O NO. : 408

PURCHASER : METALSTEEL DIVISIONE DI SO. GE. PAR. SPA
COMMODITY : STAINLESS STEEL SEAMLESS PIPES
SPEC. / MATERIALS : ASTM A312 -04b TP316/316L
Certificate / INV. No.: CA0800

DIMENSIONS				BUNDLE NO.	PIECES	WEIGHT (kgs)	HEAT NO.
ITEM	O.D. (mm) (inch)	W.T. (mm) (sch)	Length (m) /PCE				
19.	26.67 mm 3/4"	2.11 mm SCH 10S	6.0 ~ 7.0	05-7-36	74	500.32 M (642kgs)	J0503-30
20.	60.33 mm 2"	2.77 mm SCH 10S	6.0 ~ 7.0	05-7-182	146	1000.51 M (4044kgs)	J0507-10
21.	88.90 mm 3"	3.05 mm SCH 10S	6.0 ~ 7.0	05-6-295	74	503.36 M (3348kgs)	J0504-152
22.	114.30 mm 4"	3.05 mm SCH 10S	6.0 ~ 7.0	05-7-24	30	204.63 M (1792kgs)	05-7-24

CHEMICAL CONTENTS (WT%)								
ELEMENTS	C	Mn	P	S	Si	NI	Cr	Mo
	≤0.030	≤2.00	≤0.045	≤0.030	≤1.00	10.00~14.00	16.00~18.00	2.00~3.00
Item#19	0.023	0.67	0.032	0.003	0.35	10.21	16.42	2.02
Item#20	0.026	0.67	0.035	0.007	0.41	10.18	16.35	2.06
Item#21	0.021	1.03	0.038	0.003	0.49	10.35	16.60	2.13
Item#22	0.021	1.03	0.038	0.003	0.49	10.35	16.60	2.13

PHYSICAL PROPERTIES							
ELEMENTS	0.2% YIELD STRENGTH (Mpa)	TENSILE STRENGTH (Mpa)	ELONGATION (%)	FLATTENING TEST	HARDNESS (HRB) ≤90	FLARING TEST	EDDY CURRENT TEST (100%)
	≥205	≥ 515	≥35				
Item#19	280	570	58.0	OK	72	OK	OK
Item#20	280	555	57.5	OK	73	OK	OK
Item#21	305	565	60.0	OK	72	OK	OK
Item#22	285	580	57.0	OK	73	OK	OK

REMARKS:
WALL THICKNESS TOLERANCE AS PER ASTM A312-04b
HARDNESS TEST PER NACE MR0175-2003
SOLUTION HEAT TREATMENT: 1050°C × 1.15m/min
NO WELD REPAIR WAS PERFORMED
FREE FROM MERCURY CONTAMINATION
PMI TESTING DONE.
CONDITION: COLD FINISH / SOLUTION TREATED / PICKLED / PLAIN END

THE MATERIALS HAVE BEEN MANUFACTURED, TESTED AND EXAMINATED IN ACC. WITH ALL THE REQUIREMENTS OF THE ORDERED STANDARDS AND WE CONFIRM THAT ALL TEST RESULT ARE ACCEPTABLE PER ORIGINAL REF. NO.: 2005-3-5-1-11 DATED May 8, 2005.

WELLSLINK ENTERPRISE LIMITED

Manufacturer: CRYSTAL PALACE

Vs. Ord. 287009
Ns.DDT. T392A
Del 15/03/06

E.Z.
T S
143

N° di rif. 40
Ref. N°

COPY CONFORMING TO THE ORIGINAL
Metalsteel
Stainless Steel Service 3S
div. di So.Ge.Par. S.p.A.

LORENA [illegible]
SIGNATURE

ALCAN PECHINEY AVIATUBE

CERTIFICAT DE RECEPTION ET DECLARATION DE CONFORMITE
INSPECTION CERTIFICATE AND STATEMENT OF CONFORMITY
ABNAHMEPRÜFZEUGNIS UND ÜBEREINSTIMMUNGSERKLÄRUNG

141

Page 1

DIN 50049-3.1 B - EN 10204-3.1

Commande client - Customer Order - Kundenbestellung	Destinataire - Consignee - Empfänger	Commande Pechiney Aviatube
ALMET SATOLAS Ref. N°: 967216 M 48317	ALMET SATOLAS Rue des Combes 38290 SATOLAS ET BONCE	123509/ 100/ 1 N° de PV 57780

Alliage - Alloy - Werkstoff	Norme - Standard - Norm	Produit - Product - Produit
5081	ASTM B221M-05A EN755-2	BARRE RONDE BC1900
Etat - Temper - Zustand	EN573-3 EN755-3	BARRE 5081 H111 DIA. 90 MM
H111	EN755-1 ASME pr-cour le 03/01/06	

Composition chimique (% en masse) - Chemical Composition - Chemische Zusammensetzung

Coulées - Castings Schmelze	Si	Fe	Cu	Mn	Mg	Cr	Ni	Zn	Ti	Zr	Pb	Sn		
K8588	0,12	0,25	0,05	0,50	4,65	0,10	0,01	0,07	0,02	0,01	0,0030	0,0009		

Désignation des produits / Product description / Bezeichnung der Produkte
Observations - Dérogations / Remarks - Dérogations / Bemerkungen - Abweichungen

Colis : 232126 M687340 374,000 KG 7 PCS
Colis : 232127 M687340 374,000 KG 7 PCS
Colis : 232128 M687340 320,000 KG 6 PCS

Liste des contrôles par lot - Inspection List per batch - Kontrollen für jedes los
** = Périodiques / Periodic / Periodische Tests

DIMENSIONS CONFORMES
ASPECT DE SURFACE CONFORME

Résultats des essais - Test results - Zugversuche

N° de lot / Coulée / Etat de cause / Prélèvements N° sens-emplacement (1) épaisseur emin/emax	Rm Tensile Strength MPa	Rp 0,2 Yield Strength MPa	A% Elongat %	Y sur éprouvette HS/m
LOT : M687340				
COULEE : K8588				
1 L F	134	220	10	
2 L F	142	220	10	

DECLARATION DE CONFORMITE (NF L 00-015C)
STATEMENT OF CONFORMITY
ÜBEREINSTIMMUNGSERKLÄRUNG

Nous déclarons que la fourniture citée est conforme aux exigences du contrat et que après vérifications et essais, elle répond en tout point, aux exigences spécifiées, aux normes et règlements applicables, sauf exceptions, réserves ou dérogations énumérées dans la présente déclaration de conformité.

Certifiées exactes les indications ci-dessus
I certify that the above is correct / Obige Angaben als zutreffend bescheinigt.

Date 3/01/06 Signature

Richard COLIN
SUPERVISEUR LIGNE BARRES

(1) L : Sens long LF : Sens Travers Long D : Début de Plage F : Fin de Plage

Ref. IMP01532

OF 9903 DN 50 - 25 BW

N° di rif. / Ref. N° 42

S.A.S.U. au capital de 3.250.000 Euros
712 038 705 RCS NANTES, APE 2740, N° TVA CEE : FR 17 712 032 705

Usine de Montreuil-Juigné
Siège social
15 rue de Grande-Bretagne, BP 131, 44471 CARQUEFOU CEDEX - France

+33 04 74 95 93 55

ALCAN

PECHINEY
AVIATUBE

CERTIFICAT DE RÉCEPTION ET DÉCLARATION DE CONFORMITÉ
INSPECTION CERTIFICATE AND STATEMENT OF CONFORMITY
ABNAHMEPRÜFZEUGNIS UND ÜBEREINSTIMMUNGSERKLÄRUNG

DIN 50049-3.1 B - EN 10204-3.1

(142)

Page 1

Commande client - Customer Order - Kundenbestellung	Destinataire - Consignee - Empfänger	Commande Pechiney Aviatube
ALMST SATOLAS Ref. N°: 967216 N 48317	ALMST SATOLAS Rue des Combes 38230 SATOLAS ET BONCE	123909/ 100/ 1 N° de PV 57780

Alliage - Alloy - Werkstoff	Norme - Standard - Norm		Produit - Product - Produkt
5083	ASTM B221M-05	EN755-2	BARRE RONDE - EC1308
Etat - Temper - Zustand	EN573-3	EN755-3	BARRE 5083 H111 DIA. 90 MM
H111	EN755-1		

Composition chimique (% en masse) - Chemical Composition - Chemische Zusammensetzung

Coulées - Castings Schmelze	Si	Fe	Cu	Mn	Mg	Cr	Ni	Zn	Ti	Zr	Pb	NA		
E8588	0,13	0,28	0,05	0,10	4,65	0,10	0,01	0,07	0,02	0,01	0,0030	0,0000		

Désignation des produits / Product description / Bezeichnung der Produkte
Observations - Dérogations/ Remarks - Derogations / Bemerkungen - Abweichungen

Colis : 232126 M687340 374,000 KG 7 PCS
Colis : 232127 M687340 374,000 KG 7 PCS
Colis : 232128 M687340 320,000 KG 6 PCS

Liste des contrôles par lot - Inspection List per batch - Kontrollen für jedes los
** = Périodiques / Periodic / Periodische Tests

DIMENSIONS CONFORMES
ASPECT DE SURFACE CONFORME

Résultats des essais - Test results - Zugversuche

N° de lot / Coulée / État de cause / Prélèvements N° sans-emplacement (1) épaisseur environnant	Rm Tensile Strength MPa	Rp 0,2 Yield Strength MPa	A% Elongat %	γ sur épreuve MS/m
LOT : M687340				
COULEE : E8588				
1 L F	326	220	16	
2 L F	342	220	16	

DECLARATION DE CONFORMITE (NF L 00-015C)
STATEMENT OF CONFORMITY
ÜBEREINSTIMMUNGSERKLÄRUNG

Nous déclarons que la fourniture citée est conforme aux exigences du contrat et que après vérifications si essais, elle répond en tout point, aux exigences spécifiées, aux normes et règlements applicables, sauf exceptions, réserves ou dérogations énumérées dans la présente déclaration de conformité.

Certifiées exactes les indications ci-dessus
I certify that the above is correct / Obige Angaben als zutreffend beschäftigt

Date 5/10/05 Signature

Richard COLIN
SUPERVISEUR LIGNE BARRES

(1) L : Sens long LT : Sens Travers Long O : Détail de Filage F : Fin de filage

Ref: IMP015C

OF 9903 : DN 50-25 Bw

S.A.S.U. au capital de 3.280.000 Euros
712 692 705 RCS NANTES , APE 274D , N° TVA CEE : FR 17 712 692 705

Usine de Montreuil-Juigné
Siège social
15 rue de Grande-Bretagne, BP 131, 44471 CARQUEFOU CEDEX - France

COGNE ACCIAI SPECIALI S.p.a.
11100 AOSTA - VIA PARAVERA, 16
TEL. +39.0165.3021 - FAX +39.0165.302296
CAP. SOC. 80.000.000 EUR INT. VERS.
VAT: IT00571320076
P.I. 00571320076 C.F. 02187360967
REG. IMP. AO003 - 7234 REA 60474

CERTIFICAT DE RECEPTION 3.1 (EN 10204:2004)
(A03) NUMERO DE DOCUMENT 2005036331

SSAI DE TRACTION AU ETAT DE FOURNITURE
ef. 020000172577
PECIFICATION EN 10002 (C02) ORIENTATION DE L'EPROUVETTE: L

066243

NITE DE MESURE	RM NMM	RP02 NMM	A % 5.0 D	Z %	RP1 NMM
BTENU	605,00	274,00	55,80	75,00	324,00
	598,00	274,00	57,00	75,00	321,00
	598,00	267,00	57,40	74,00	316,00
	611,00	280,00	54,00	74,00	327,00

IMENSION DU GRAIN
ef. 020000172577
PECIFICATION ASTME112 --
BTENU 4,00 6,00

ES PRODUITS SONT CONFORMES A LA DIRECTIVE PED 97/23/CE
ES PRODUITS SONT CONFORMES AUX NORMES EN10272/00
ONTROLE' ANTIMELANGE AU 100%.
ONTROLE VISUEL DES SURFACES ET DIMENSIONS : CONFORME.
UCUNE REPARATION DE SOUDURE EXECUTEE
XEMPTE DE CONTAMINATION DE MERCURE
SSAI DE CORROSION:
SEL. ASTM A262/02a PRACT. E / EN ISO 3651-2 (00)): CONFORME
ES PRODUITS SONT CONFORMES A LA SPECIFICATION ASTM A320/A320M-03 01A B8 CL.1
/PERTREMPE 1050^C/EAU
ES PRODUITS SONT CONFORMES AUX NORMES UNS S31603
ES PRODUITS SONT CONFORMES AUX STIPULATIONS DE LA COMMANDE.
ABORATION AU FOUR ELECTRIQUE + AOD + COULEE CONTINUE
/ ACCORD AVEC LA NORME EN 10278/99
ATERIEL PRODUIT DANS UN SYSTEME D'ASSURANCE QUALITE EN ACCORD
/EC UNI EN ISO 9001:2000 ET QS-9000 ED.3 MAR.98 (POUR CETTE DERNIERE
EULEMENT POUR LES BARRES EN ACIER LAMINE'-ECROUTE'- RECTIFIE' ET
OUDRES METALLIQUES ATOMISEES), CERTIFIE PAR IGQ.

143

COGNE ACCIAI SPECIALI S.p.a.
11100 AOSTA - VIA PARAVERA, 16
TEL. +39.0165.3021 - FAX +39.0165.302286
CAP. SOC. 80.000.000 EUR INT. VERS.
VAT: IT00571320078
P.I. 00571320078 C.F. 02187360957
REG. IMP. AO003 - 7234 REA 50474

CERTIFICAT DE RECEPTION 3.1 (EN 10204:2004)
(A03) NUMERO DE DOCUMENT 2005036331

(A06) ACHETEUR : COGNE FRANCE S.A.
(A07) N. DE LA COMMANDE DU CLIENT .: CDA30620
(A01) USINE PRODUCTRICE .: COGNE ACCIAI SPECIALI - AOSTA, VIA PARAVERA 16
(A05) AUTEUR DU DOCUMENT : SERVICS QUALITE
(A08) NUMERO DE LA COMMANDE DE L''USINE * 25052952 /20 (A04) SIGLE DU PRODUCTEUR .: COGNE

066243

SPECIFICATION : CAS-E ANFORDERUNGEN :
(B01) PRODUIT : 2260 PEL LAMINE ECROUTE-2B RONDS ISOK11
(B04) ETAT DE LIVRAISON : RS HYPERTREMPE
(B11) DIMENSIONS DU PRODUIT (MM): 65,000 (B12) LONGUEUR DU PRODUIT (MM): 06000 /06200
(B02) NUANCE DE L'ACIER : WN.1.4401/4404 IMCO316L NUANCE INTERNE : F316L 1.4404
(B08) NUMERO DE LA COULEE : 572192 (B07) NUMERO DE LOT : 042890
(B06) MARQUAGE DU PRODUIT : IMCO 316/316L SIGLA SOST. N. COLATA : 289

LES PRODUITS SONT CONFORME A LA SPECIFICATION MR 01.75 (01)
LES PRODUITS SONT CONFORMES A LA SPECIFICATION EN 10088/3 (95)
W.1.4404-WN.1.4401
LES PRODUITS SONT CONFORMES A LA SPECIFICATION DIN 17440/96, W.1.4404
ANALYSE CONFORME A LA SIS 2347
ANALYSE CONFORME A LA SIS 2348
LES PRODUITS SONT CONFORMES A LA SPEC. NF A35-574/90, NUANCE Z7 CND 17-11-02
LES PRODUITS SONT CONFORMES A LA SPECIFICATION NFA 35 574, NUANCE Z3 CND 18-12-02
LES PRODUITS SONT CONFORMES A LES SPECIFICATION ASTM A182/A182M-02, A193/A193M-03, A276-03, A479/A479M-03 ET ASME SA182/SA182M-03 A193/SA193M-01, SA479/SA479M-01.

(C71) COMPOSITION CHIMIQUE - DE COULEE SELON ASTME1019-E1086-E415

Réf.	020000172308									
ELEMENT	C	Si	Mn	P	S	N	Cr	Mo	Ni	Cu
OBTENU	0,016	0,500	1,880	0,028	0,030	0,077	16,600	2,000	10,000	0,500
ELEMENT	Co									
OBTENU	0,120									

ESSAI DE DURETE AU ETAT DE FOURNITURE

Réf.	020000172577		
SPECIFICATION	UNIENISO6506	ESSAI DE DURETE	HB
OBTENU	180,0		

ESSAI DE RESILIENCE AU ETAT DE FOURNITURE

Réf.	020000172577									
SPECIFICATION	EN 10045					(C02) ORIENTATION DE L'EPROUVETTE: L				
(C40) EPROUVETTE	KV									
(C03) TEMPERATURE D''ESSAI °C	20,0000									
UNITE DE MESURE	J									
OBTENU	266,00	277,00	274,00	278,00	269,00	244,00	288,00	269,00	270,00	274,00
	273,00	276,00								

144

OF-9903 DN 50-25 Bw

lai : 12/04/2006

TC9218-5

TpC Thévenet + Clerjounie
Tél. : [33] (0)4.72.02.68.00.
Fax : [33] (0)4.72.02.68.01.

TRANSITION JOINT INSPECTION RECORD

Page 1/1

d'affaire / Job #	Client / Customer	N° de commande client / Customer P. O. #	Date et visa du contrôleur / Signed and dated
59	ZANON	2870016	11/04/06

ITEM	Diamètre Nominal / Nominal Diameter	Plan / Drawing	Classe / Class	Quantité / Quantity	Pression de test hydraulique / Hydraulic Test Pressure	Lecture maxi du test helium / Helium Test Max. Reading	Epaisseur interface alu / Alu/SS Interface Wall Thickness mini	Epaisseur interface alu / Alu/SS Interface Wall Thickness nomin.	Chocs thermiques / Thermal shocks	Nettoyage pour service oxygène / Oxygen Service cleaning	Observations / Remarks Contrôle dimensionnel / Dimensional examination
1	50	8561	2	8	75 BAR	$1,0 \times 10^{-9}$	2,72	2,75	NO	NO	YES

Acciaierie Valbruna s.p.a.

35100 VICENZA (Italia) – Viale della Scienza, 25 z.l.

ATTESTATO DI CONTROLLO - WERKSZEUGNIS
TEST REPORT - RELEVE DE CONTROLE
EN 10204, 2.2

147

Ordine spedizione nr. 66670/16/12 [2002/ 14305-V] Certificato nr. 2337/2002-F

Cliente:

Conferma ordine nr. 02 K 45727

Ordine nr. MATER. X CONF. 02002619 01 01

Deposito: ACC. VALBRUNA SPA- MAG. PARMA

Produttore: ACCIAIERIE VALBRUNA s.p.a.

Tipo di elaborazione: E + AOD

Oggetto prod.: PELATO SOLUB.

Specifiche: AISI,,316/316L,A ASTM A276,2000/

CERTIFICATI X FLANGE CF RONCONI

Qualità: T.316/316L CF16

Mat.: MVAPML [MAXIVAL]

Pos. nr.	Oggetto	Dimensioni [mm]	Lunghezza [mm]	Colata	Pezzi	Peso	Lotto nr.
1	TONDO	35.00		004773			

Sono state soddisfatte le condizioni richieste

TEST	Provetta/Provino		Snervamento Rp 0.2% N/mm2		Resistenza Rm N/mm2	Allungamento E %		Strizione RA %	Resilienza	
Valori richiesti		min	205		515		40	50		
		max								
A	12.5	L	255		562	64		75		

Colata/Lot: 004773

Analisi chimica

min			16.00	10.00	2.00											
0.030 max	1.00	2.00	18.00	14.00	3.00	0.045	0.030	0.100								
C	Si	Mn	Cr	Ni	Mo	P	S	N								
0.017	0.53	1.65	17.65	12.52	2.53	0.031	0.021	0.077								

Ricottura: Annealing Soluzione a ..... °C Aiuti: Additives Dichiarazione PA

Acciaierie Valbruna s.p.a.

COPIA CONFORME ALL'ORIGINALE

N° di rif. Ref. N° 43

The Quality Management System is Certified acc. Pressure Equipment Directive [97/23/EC] Annex I, p. 4.3 by TUV and LLOYDS

Vicenza, 14/10/2002 M. Bizzotto

Mod.dd.11/ed.06 CER 36 / P Il collaudatore all stabilimento

ALCOA ITALIA S.P.A.

Sede Legale: 20017 Rho (MI) - via San Martino, 60
Cap. Vers. Lit. 10.000.000.000 - C.F. e P.I. 00899860157
Registro Imprese Milano 133224 - R.E.A. 744699

ALCOA

(143)

CERTIFICATO DI COLLAUDO INSPECTION CERTIFICATE ABNAHMEPRUFZEUGNIS CERTIFICAT DE RECEPTION UNI 10204 3.1B	DATA / DATE / DATUM / DATE: 11/03/99	NR. / NO. / NR. / NO.: C 6998
	ORDINE NR. / ORDER NO. / AUFTRAGS NR. / NO. DE COMMANDE: 99 4877 1 10	
CLIENTE / CUSTOMER / KUNDE / CLIENT: ZANON ETTORE S.P.A.	NO. PROFILO / SECTION NO. / PROFIL NR. / NO. DE PROFIL: 1611067 - FD1	
NO. ORDINE CLIENTE / CUSTOMERS ORDER NO. / AUFTRAGS NR. KUNDE / NO. DE COMMANDE CLIENT: 2421015 CSE708	PESO / WEIGHT / GEWICHT / POIDS: 586	
PROFILO DEL CLIENTE / CUSTOMERS SECTION NO. / PROFIL NR. KUNDE / NO. DE PROFIL CLIENT: VS.COD.C-VA2421008	LEGA / ALLOY / LEGIERUNG / ALLIAGE: 6060 T5 EN EN 573-3	

COMPOSIZIONE CHIMICA/CHEMICAL COMPOSITION/CHEMISCHE ZUSAMMENSETZUNG/COMPOSITION CHIMIQUE

COLATA / CAST / CHARGE		%Si	%Fe	%Cu	%Mn	%Mg	%Cr	%Ni	%Zn	%Ga	%V	%Ti	%Pb	%Zr	%Bi
95852		0,45	0,24	0,00	0,02	0,47	0,00	0,00	0,02	0,00	0,00	0,01	0,00	0,00	0,00
NORMA / LIMIT / NORM / NORME	Min.	0,30	0,10	0,00	0,00	0,35	0,00	0,00	0,00	0,00	0,00	0,00	0,00	0,00	0,00
	Max.	0,60	0,30	0,10	0,10	0,60	0,05	0,05	0,15	0,00	0,00	0,10	0,00	0,00	0,00

CARATTERISTICHE MECCANICHE/MECHANICAL PROPERTIES/MECHANISCHE EIGENSCHAFTEN/CARACTERISTIQUES MECANIQUES

NO. PROVETTA / SAMPLE NO. / PROBE NR. / NO. DE PROUVETTE		Rm N/mm²	Rp0,2 N/mm²	A5 %	HB
11309		259,0	241,0	13,1	93
NORMA / LIMIT / NORM / NORME	Min. UNI 9006/1	185	145	11,0	

N° di rif. / Ref. N° 45

NOTE

Responsabile Controllo Qualità

Cod. CERT. E.I.S.

APPENDIX A.5 – Weldig control and WPS

E. ZANON SPA
SCHIO ITALY

JOB	ST	DOC. No.	REV.	SHEET
2870	W	001	1	1/77

150

CLIENTE : DESY
CUSTOMER

ORDINE: 659 / 430630011
ORDER

PROGETTO: XFEL
PROJECT

DISEGNO : 2870.1. 001
DRAWING

COMPONENTE: CRYOSTATS
COMPONENT

Nº FABBRICA: 10344 - 10345
WORKS No.

TITOLO: QUADERNO DI SALDATURA

TITLE : WELDING BOOK

REV.	DESCRIZIONE DESCRIPTION	REDATTO ISSUED BY	VERIFICATO REVIEWED BY	APPROVATO APPROVED BY	DATA DATE
1	AS BUILT EDITION	J. BASONI	DAL SANTO	CORNIANI	15.12.06
0	EMISSIONE ISSUE	JB	ADS	GC	13.07.06

E. ZANON		WELDING MAP (151)		
Dwg. No. 2870.0.001		N.F. /	Sheet 1 of 1	
Mfr' Work 2870		CRIOMODULE TYPE 3		
WPS	**PQR**	**WELD IDENTIFICATION**	**PROCESS**	**MATERIAL**
		Dwg. 2870.1.001		
2870/1	65/03/CE	A1 – A2	15+121	S 235 JR
2870/17	VEN 0600201/4+ VEN 0600201/6	B1	111+121	S 235 JR
2870/18	169/01	C1 – C2	111	S 235 JR + A304L
2870/4	169/01	D11 to D13	141+111	S 235 JR + A304L
2870/5	VEN 0600201/6	W6	141+111	S 235 JR
2870/6	02/02/CE	Fillet welds	111	S 235 JR
2870/19	/	Fillet welds	135	S 235 JR
2870/16	/	Build Up	111	E 309LMo-17
		Dwg. 2870.1.002		
2870/4	169/01	D2 to D7 – D9 – D10	141+111	S 235 JR + A304L
2870/7	106/01	A3 to A6	141+111	A304L
2870/8	204/00	C4 to C7-C10-C12-C13-D1-D8	141	A304L
2870/9	204/00	C11 – C14 – Fillet welds	141	A304L
		Dwg. 2870.2.001		
2870/10	/	L1 – L2	15	A316L
2870/11	/	Fillet welds	141	A316L
2870/20	/	B21 – B21 bis	141	A316L
		Dwg. 2870.2.003		
2870/20	/	B22 – B23	141	A316L
		Dwg. 2870.2.004		
2870/7	106/01	S20 to S23 – S26 to S26	141+111	A304L
2870/9	204/00	Fillet welds	141	A304L
		Dwg. 2870.3.001		
2870/13	VEN 0600258/3	B33 – B34 – D31	141	A316L
2870/14	/	B31 – B32	141	AL 5083 + AL 6060
2870/15	105790	Fillet welds	141	AL 1050A
2870/21	105788	W35	131	AL 1050A
		Dwg. 2870.4.001		
2870/13	VEN 0600258/3	B43 – B44	141	A316L
2870/14	/	B41 – B22	141	AL 5083 + AL 6060
2870/15	105790	Fillet welds	141	AL 1050A
2870/21	105788	W45	131	AL 1050A
		Dwg. 2870.5.001		
2870/11	/	Fillet welds	141	A316L
2870/13	VEN 0600258/3	B51	141	A316L
		Dwg. 2870.5.002		
2870/11	/	Fillet welds	141	A316L
2870/13	VEN 0600258/3	B52 – B53 – D51 – D52	141	A316L
		Dwg. 2870.5.003		
2870/11	/	C51-C52-D53-D54-W55	141	A316L
2870/13	VEN 0600258/3	B55	141	A316L

E. ZANON	WELDING PROCEDURE SPECIFICATION Specifica Procedimento di Saldatura WELDING SPECIFICATION CONFORMING TO EN 10609-1	WPS N° 287G/7 Rev. No Date 07/07/06 Pag. 1 to 2 (1 to 2)

Welding process (es) 141 (GTAW) + 111 (SMAW) Type (s) Manual WPAR N° 106/01

JOINTS

Joints Design See Sketches

Backing Yes Others No GTAW

Backing Material (Type) Weld metal

[X] Metal [ ] Nonfusing Metal
[ ] Nonmetallic [ ] Other

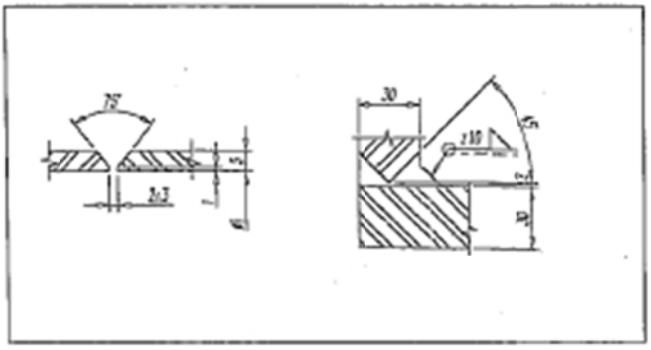

BASE METALS (EN 15608)

P-N° Groups N° 8.1 to P-N° Groups N° 8.1

Specification Type and Grade A240 Tp 304L
to Specification Type and Grade A240 Tp 304L

Chem. Analysis and Mech. Prop.
to Chem. Analysis and Mech. Prop.

Thickness range:

Base Metal:	Groove	3 to 30 mm	Fillet	All
Pipe Ø Range:	Groove	O.D. > 150 mm	Fillet	All

Other

FILLER METALS

	141 - GTAW	111 - SMAW	
Spec. N° (SFA)	5.9	5.4	
AWS N° (Class)	ER 308L	E 308L-17	
F-N°	6	4	
A-N°	8	8	
Size of Filler Metals Ø	Ø2 mm	Ø3,25-4 mm	
Deposited Weld Metal	-	-	
Thickness Range:	-	-	
Groove	Up to 6 mm	Up to 22 mm	
Fillet	All	All	
Electrode-Flux (Class)	-	-	
Flux Trade Name	-	-	
Consumable Insert	NO	NO	
T.N.	Bohler Thyssen "EAS-IG"	Bohler Thyssen "FOX EAS 2-A"	

Issued by Welding Coord.	Date	Approved by Q.C.M.	Date		
E. ZANON J. BASORE Welding Engineer	07/07/06	E. ZANON A. Del Santo	07/07/06		

E. ZANON	WELDING PROCEDURE SPECIFICATION Specifica Procedimento di Saldatura WELDING SPECIFICATION CONFORMING TO EN 10609-1	WPS N° 2870/7 Rev. No Date 07/07/06 Pag. 2 to 2 (1)

POSITIONS		POSTWELD HEAT TREATMENT	
Position(s) of Groove	PA	Temperature Range	N.A.
Welding Progression: Up	Down	Time Range	
Position(s) of Fillet	PA - PB		

PREHEAT		GAS			
			Percent Composition		
			Gas (es)	Mixture	Flow Rate
Preheat temp. Min	18°C	Shielding	Argon	99,9%	8÷12 L/1'
Interpass Temp. Max.	150°C	Trailing			
Preheat Maintenance		Backing	Argon	99,9%	10÷15 L/1'
			(Gr.I1 EN439)		

ELECTRICAL CHARACTERISTICS

Current AC or DC DC Polarity SP-RP Amps (Range) See Below Volts (Range) See Below

Tungsten Electrode size and type Ø2,4 mm EW Th-2 (WT20 - acc.to EN26848)

Mode of Metal Transfer for GMAW N.A. Electrode Wire feed speed range N.A.

TECNIQUE	
String or Weave Bead	String
Orifice or Gas Cup Size	Ø½"(141)
Initial and Interpass Cleaning (Brushing, Grinding, etc.)	Brushing (s.s.wires), acetone & Grinding
Method of back gouging	Grinding where necessary
Oscillation	N.A.
Contact Tube to Work Distance	N.A.
Multiple or Single Pass (per side)	Multiple
Multiple or Single Electrodes	Single
Travel Speed (Range)	N.A.
Peening	NO
Other	

Weld Layer (s)	Process	Filler Metal		Current		Volt Range	Travel speed Range	Max. Heat Input	Other
		Class	Ø	Type Polar	Amp. Range				
1-2	141	ER 308L	2 mm	DC-SP	160÷180	13÷16	/	/	/
3	111	E 308L-17	3,25 mm	DC-RP	110÷130	22÷25	/	/	/
Others	111	E 308L-17	4 mm	DC-RP	150÷170	22÷25	/	/	/

Issued by Welding Coord.	Date	Approved by Q.C.Mr.	Date		
E. ZANON J. BARON Welding Engineer	07/07/06	E. ZANON A. Del Santo	07/07/06		

E. ZANON	WELDING PROCEDURE SPECIFICATION Specifica Procedimento di Saldatura WELDING SPECIFICATION CONFORMING TO EN 15609-1	WPS N° 287d/9 Rev. No Date 07/07/06 Pag. 1 to 2 (164)

Welding process (es) 141 (GTAW) Type (s) MANUAL WPAR N° 204/00

JOINTS

Joints Design See Sketch
Backing Yes ____ No X
Backing Material (Type) -

[X] Metal [ ] Nonfusing Metal
[ ] Nonmetallic [ ] Other

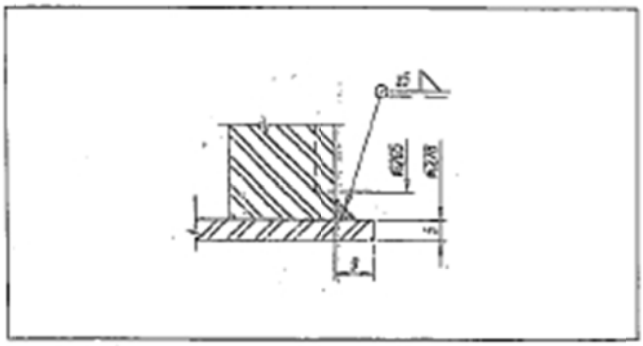

BASE METALS

P-N° ____ Groups N° 8.1 to P-N° ____ Groups N° 8.1

Specification Type and Grade A182 F 304L / A240 Tp 304L
to Specification Type and Grade A312 Tp 304L

Chem. Analysis and Mech. Prop.
to Chem. Analysis and Mech. Prop.

Thickness range:
Base Metal: Groove - Fillet All
Pipe Ø Range: Groove - Fillet All
Other

FILLER METALS

	141 (GTAW)		
Spec. N° (SFA)	5.9		
AWS N° (Class)	ER 308L		
F-N°	6		
A-N°	8		
Size of Filler Metals Ø	Ø2,0 mm		
Deposited Weld Metal	-		
Thickness Range:	-		
Groove	-		
Fillet	All		
Electrode-Flux (Class)	-		
Flux Trade Name	-		
Consumable Insert	NO		
T.N.:	"Bohler EAS 2-IG"		

Issued by Welding Coord.	Date	Approved by Q.C.M.	Date		
E. ZANON J. GASONI Welding Engineer	07/07/06	E. ZANON A. Dal Santo	07/07/06		

E. ZANON	WELDING PROCEDURE SPECIFICATION Specifica Procedimento di Saldatura WELDING SPECIFICATION CONFORMING TO EN 10609-1	WPS N° 28709 Rev. No 0 Date 07/07/06 Pag. 2 to 2 (165)

POSITIONS		POSTWELD HEAT TREATMENT	
Position(s) of Groove	-	Temperature Range	N.A.
Welding Progression: Up	Down	Time Range	-
Position(s) of Fillet	PA - PB		

PREHEAT		GAS			
			Percent Composition		
			Gas (es)	Mixture	Flow Rate
Preheat temp. Min	18°C	Shielding	Argon	99,99%	6÷10 l/1'
Interpass Temp. Max.	150°C	Trailing			
Preheat Maintenance		Backing			
			(Gr. I1 - EN 439)		

ELECTRICAL CHARACTERISTICS					
Current AC or DC	DC	Polarity	See Below	Amps (Range)	See Below
Volts (Range)	See Below				
Tungsten Electrode size and type	Ø2,4mm - EWTh-2				
Mode of Metal Transfer for GMAW	N.A.	Electrode Wire feed speed range	N.A.		

TECNIQUE	
String or Weave Bead	String
Orifice or Gas Cup Size	Ø1/2"
Initial and Interpass Cleaning (Brushing, Grinding, etc.)	Brushing (S.S.wires) & Acetone
Method of back gouging	N.A.
Oscillation	N.A.
Contact Tube to Work Distance	N.A.
Multiple or Single Pass (per side)	Multiple
Multiple or Single Electrodes	Single
Travel Speed (Range)	See Below
Peening	NO
Other	-

Weld Layer (s)	Process	Filler Metal		Current		Volt Range	Travel speed Range	Max. Heat Input	Other
		Class	Ø	Type Polar	Amp. Range				
All	141	ER 308L	2,0 mm	DC-SP	80÷120	11÷15	/	/	/

Issued by Welding Coord.	Date	Approved by Q.C.M.	Date		
E. ZANON J. BASONI Welding Engineer	07/07/06	E. ZANON A. Dal Santo	07/07/06		

E. ZANON	WELDING PROCEDURE SPECIFICATION Specifica Procedimento di Saldatura WELDING SPECIFICATION CONFORMING TO EN 10609-1	WPS N° 2870/10 Rev. No Date 07/07/06 Pag. 1 to 2

Welding process (es) 15 (PAW) Type (s) MACHINE WPAR N° To be qualified

JOINTS

Joints Design See Sketches

Backing Yes ____ No X

Backing Material (Type) -

☐ Metal ☐ Nonfusing Metal
☐ Nonmetallic ☐ Other

BASE METALS

P-N° ____ Groups N° 8.1 to P-N° ____ Groups N° 8.1

Specification Type and Grade A240 Tp 316L
to Specification Type and Grade A240 Tp 316L

Chem. Analysis and Mech. Prop.
to Chem. Analysis and Mech. Prop.

Thickness range:

Base Metal: Groove 3 to 12 mm Fillet

Pipe Ø Range: Groove O.D. > 150 mm Fillet

Other

FILLER METALS

	15 - PAW		
Spec. N° (SFA)	5.9		
AWS N° (Class)	ER 310MoL		
F-N°	6		
A-N°	9		
Size of Filler Metals Ø	Ø1,2 mm		
Deposited Weld Metal	-		
Thickness Range:	-		
Groove	Up to 12 mm		
Fillet	-		
Electrode-Flux (Class)	-		
Flux Trade Name	-		
Consumable Insert	NO		
T.N.	Sandvik "25.22.2LMn"		

Issued by Welding Coord.	Date	Approved by Q.C.M.	Date		
E. ZANON J. BASON Welding Engineer	07/07/06	E. ZANON A. Del Santo	07/07/06		

E. ZANON	WELDING PROCEDURE SPECIFICATION Specifica Procedimento di Saldatura WELDING SPECIFICATION CONFORMING TO EN 10659-1	WPS N° 2870/10 Rev. No 0 Date 07/07/06 Pag. 2 to 2 (154)

POSITIONS

Position(s) of Groove: PA
Welding Progression: Up _____ Down _____
Position(s) of Fillet: _____

POSTWELD HEAT TREATMENT

Temperature Range: N.A.
Time Range: _____

PREHEAT

Preheat temp. Min: 15°C
Interpass Temp. Max: -
Preheat Maintenance: _____

GAS

	Percent Composition		
	Gas (es)	Mixture	Flow Rate
Shielding	Argon	99,90%	2÷4/20÷30 L/1'
Trailing	Argon	99,90%	20÷30 L/1'
Backing	Argon	99,90%	20÷30 L/1'

(Gr.I1 EN439)

ELECTRICAL CHARACTERISTICS

Current AC or DC: DC Polarity: SP Amps (Range): See Below Volts (Range): See Below
Tungsten Electrode size and type: Ø4,0mm EW Th-2 (PAW) WT20 - acc.to EN26848 (2,5mm inside a gas cup)
Mode of Metal Transfer for GMAW: N.A. Electrode Wire feed speed range: 60÷80 Cm/1'
Wire feed speed range (PAW): 90÷110 Cm/1'

TECNIQUE	
String or Weave Bead	String
Orifice or Gas Cup Size	Type M136 (15)
Initial and Interpass Cleaning (Brushing, Grinding, etc.)	Brushing (s.s.wires) & Grinding
Method of back gouging	N.A.
Oscillation	N.A.
Contact Tube to Work Distance	3÷10 mm
Multiple or Single Pass (per side)	Single (15)
Multiple or Single Electrodes	Single
Travel Speed (Range)	See Below
Peening	NO
Other	Machine Type: Fronius Trans-Syenergic 5000

Weld Layer (s)	Process	Filler Metal		Current		Volt Range	Travel speed Range	Max. Heat Input	Other
		Class	Ø	Type Polar	Amp. Range				
1	15	ER 310MoL	1,2 mm	DC-SP	240÷250	23÷24	20÷21	1,56÷1,8	
							Cm/1'	KJ/mm	

Issued by Welding Coord.	Date	Approved by Q.C.M.	Date		
E. ZANON J. BARONI Welding Engineer	07/07/06	E. ZANON A. Di Santo	07/07/06		

E. ZANON	WELDING PROCEDURE SPECIFICATION Specifica Procedimento di Saldatura WELDING SPECIFICATION CONFORMING TO EN 10699-1	WPS N° 2870/11 Rev. No Date 07/07/06 Pag. 1 to 2 (168)

Welding process (es) 141 (GTAW) Type (s) MANUAL WPAR N° To be qualified

JOINTS

Joints Design See Sketch
Backing Yes ____ No X
Backing Material (Type) -

[X] Metal [ ] Nonfusing Metal
[ ] Nonmetallic [ ] Other

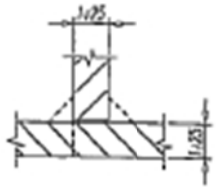

BASE METALS

P-N° ____ Groups N° 8.1 to P-N° ____ Groupe N° 8.1

Specification Type and Grade A182 F 316L / A240 Tp 316L
to Specification Type and Grade A240 Tp 316L / A312 Tp 316L

Chem. Analysis and Mech. Prop.
to Chem. Analysis and Mech. Prop.

Thickness range:
Base Metal: Groove - Fillet All
Pipe Ø Range: Groove - Fillet All
Other

FILLER METALS

	141 (GTAW)		
Spec. N° (SFA)	5.9		
AWS N° (Class)	ER 316MoL		
F-N°	6		
A-N°	9		
Size of Filler Metals Ø	Ø2,0 mm		
Deposited Weld Metal	-		
Thickness Range:	-		
Groove	-		
Fillet	All		
Electrode-Flux (Class)	-		
Flux Trade Name	-		
Consumable Insert	NO		
T.N.	Sandvik "25.22.2LMn"		

Issued by Welding Coord.	Date	Approved by D.C.M.	Date		
E. ZANON J. BASONI Welding Engineer	07/07/06	E. ZANON A. Dal Santo	07/07/06		

Operating Procedures

E. ZANON	WELDING PROCEDURE SPECIFICATION Specifica Procedimento di Saldatura WELDING SPECIFICATION CONFORMING TO EN 15609-1	WPS N° 287011 Rev. No 0 Date 07/07/06 Pag. 2 to 2 (161)

POSITIONS		POSTWELD HEAT TREATMENT	
Position(s) of Groove	PA	Temperature Range	N.A.
Welding Progression: Up	Down	Time Range	-
Position(s) of Fillet	PA - PB		

PREHEAT		GAS			
			Percent Composition		
			Gas (es)	Mixture	Flow Rate
Preheat temp. Min	15°C	Shielding	Argon	99,99%	6÷10 L/1'
Interpass Temp. Max.	150°C	Trailing			
Preheat Maintenance		Backing			
		(Gr. I1 EN 439)			

ELECTRICAL CHARACTERISTICS					
Current AC or DC	DC	Polarity	See Below	Amps (Range)	See Below
Volts (Range)	See Below				
Tungsten Electrode size and type	Ø2,4mm - EWTh-2				
Mode of Metal Transfer for GMAW	N.A.	Electrode Wire feed speed range	N.A.		

TECNIQUE	
String or Weave Bead	String
Orifice or Gas Cup Size	Ø1/2"
Initial and Interpass Cleaning (Brushing, Grinding, etc.)	Brushing (S.S.wires) & Acetone
Method of back gouging	N.A.
Oscillation	N.A.
Contact Tube to Work Distance	N.A.
Multiple or Single Pass (per side)	Multiple
Multiple or Single Electrodes	Single
Travel Speed (Range)	See Below
Peening	NO
Other	-

Weld Layer (s)	Process	Filler Metal		Current		Volt Range	Travel speed Range	Max. Heat Input	Other
		Class	Ø	Type Polar	Amp. Range				
All	141	ER 310MoL	2,0 mm	DC-SP	80÷120	11÷15	/	/	/

Issued by Welding Coord.	Date	Approved by Q.C.M.	Date		
E. ZANON J. BASONI Welding Engineer	07/07/06	E. ZANON A. Dal Santo	07/07/06		

E. ZANON

WELDING PROCEDURE SPECIFICATION

Specifica Procedimento di Saldatura

WELDING SPECIFICATION CONFORMING TO EN 10609-1

WPS N° 287/0/13
Rev. No 1
Date 14/12/06
Pag. 1 to 2 (17)

Welding process (es) 141 (GTAW) Type (s) MANUAL WPAR N° VEN 060258/3

JOINTS

Joints Design See Sketch
Backing Yes ____ No X
Backing Material (Type) -

[X] Metal [ ] Nonfusing Metal
[ ] Nonmetallic [ ] Other

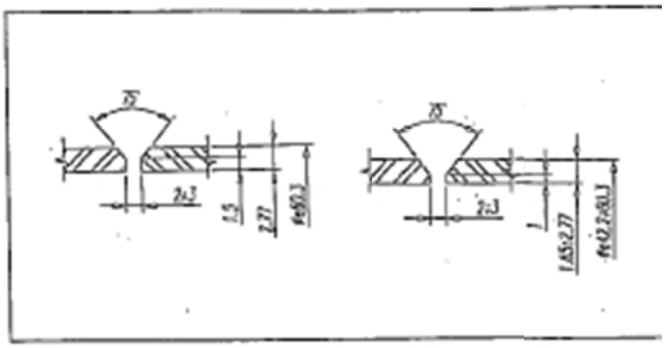

BASE METALS

P-N° ____ Groups N° 8.1 to P-N° ____ Groups N° 8.1

Specification Type and Grade A182 F 316L / A240 Tp 316L
to Specification Type and Grade A240 Tp 316L / A312 Tp 316L

Chem. Analysis and Mech. Prop. ____
to Chem. Analysis and Mech. Prop. ____

Thickness range:
Base Metal: Groove 1 to 4 mm Fillet All
Pipe Ø Range: Groove OD > 25 mm Fillet All
Other ____

FILLER METALS

	141(GTAW)		
Spec. N° (SFA)	5.9		
AWS N° (Class)	ER310MoL		
F-N°	6		
A-N°	9		
Size of Filler Metals Ø	Ø1,6 - 2,0 mm		
Deposited Weld Metal	-		
Thickness Range:	-		
Groove	Up to 4 mm		
Fillet	All		
Electrode-Flux (Class)	-		
Flux Trade Name	-		
Consumable Insert	NO		
T.N.	Sandvik "25.22.2LMn"		

Issued by Welding Coord.	Date	Approved by Q.C.M.	Date		
E. ZANON J. BASONI Welding Engineer	07/07/06	E. ZANON A. Del Santo	07/07/06		

E. ZANON	WELDING PROCEDURE SPECIFICATION Specifica Procedimento di Saldatura WELDING SPECIFICATION CONFORMING TO EN 10609-1	WPS N° 2670/13 Rev. No 1 Date 14/12/06 Pag. 2 to 2 (171)

POSITIONS

Position(s) of Groove: PA
Welding Progression: Up ____ Down ____
Position(s) of Fillet: ____

POSTWELD HEAT TREATMENT

Temperature Range: N.A.
Time Range: -

PREHEAT

Preheat temp. Min: 18°C
Interpass Temp. Max.: 150°C
Preheat Maintenance: ____

GAS

	Gas (es)	Percent Composition: Mixture	Flow Rate
Shielding	Argon	99,99%	6÷10 L/1'
Trailing			
Backing	Argon	99,99%	10÷20 L/1'

(Gr. I1 EN 439)

ELECTRICAL CHARACTERISTICS

Current AC or DC: DC Polarity: See Below Amps (Range): See Below Volts (Range): See Below
Tungsten Electrode size and type: Ø2,4mm - EWTh-2
Mode of Metal Transfer for GMAW: N.A. Electrode Wire feed speed range: N.A.

TECNIQUE	
String or Weave Bead	String
Orifice or Gas Cup Size	Ø1/2"
Initial and Interpass Cleaning (Brushing, Grinding, etc.)	Brushing (S.S.wires) & Acetone
Method of back gouging	N.A.
Oscillation	N.A.
Contact Tube to Work Distance	N.A.
Multiple or Single Pass (per side)	Multiple
Multiple or Single Electrodes	Single
Travel Speed (Range)	See Below
Peening	NO
Other	-

Weld Layer (s)	Process	Filler Metal: Class	Filler Metal: Ø	Current: Type Polar	Current: Amp. Range	Volt Range	Travel speed Range	Max. Heat Input	Other
1	141	ER 310MoL	1,6 mm	DC-SP	80÷100	11÷15	/	/	/
Others	141	ER 310MoL	2,0 mm	DC-SP	110÷140	11÷15	/	/	/

Issued by Welding Coord.	Date	Approved by Q.C.M.	Date		
E. ZANON J. BASCHI Welding Engineer	07/07/06	E. ZANON A. Del Santo	07/07/06		

E. ZANON	WELDING PROCEDURE SPECIFICATION Specifica Procedimento di Saldatura WELDING SPECIFICATION CONFORMING TO EN 10609-1	WPS N° 2870/14 Rev. No Date 07/07/06 Pag. 1 to 2

Welding process (es) 141 (GTAW) Type (s) MANUAL WPAR N° To be qualified

JOINTS

Joints Design See Sketch
Backing Yes ____ No X
Backing Material (Type) -

[X] Metal [ ] Nonfusing Metal
[ ] Nonmetallic [ ] Other

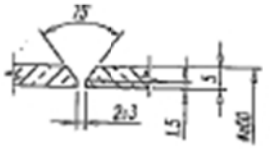

BASE METALS

P-N° ____ Groups N° 22 to P-N° ____ Groups N° 23

Specification Type and Grade Al 5060
to Specification Type and Grade Al 6060 T5

Chem. Analysis and Mech. Prop.
to Chem. Analysis and Mech. Prop.

Thickness range:

Base Metal:	Groove	1 to 4 mm	Fillet	All
Pipe Ø Range:	Groove	OD > 25 mm	Fillet	All

Other

FILLER METALS

	141 (GTAW)		
Spec. N° (SFA)	5.10		
AWS N° (Class)	ER 5356		
F-N°	22		
A-N°	N.A.		
Size of Filler Metals Ø	Ø1,6 - 2,0 mm		
Deposited Weld Metal	-		
Thickness Range:	-		
Groove	Up to 4 mm		
Fillet	All		
Electrode-Flux (Class)	-		
Flux Trade Name	-		
Consumable Insert	NO		
T.N.	Siderfil "AlMg 5"		

Issued by Welding Coord.	Date	Approved by Q.C.M.	Date		
E. ZANON J. BASONI Welding Engineer	07/07/06	E. ZANON A. Dal Bargo	07/07/06		

E. ZANON	WELDING PROCEDURE SPECIFICATION Specifica Procedimento di Saldatura WELDING SPECIFICATION CONFORMING TO EN 15609-1	WPS N° 2870/14 Rev. No 0 Date 07/07/06 Pag. 2 to 2 (12)

POSITIONS

Position(s) of Groove: PA
Welding Progression: Up ____ Down ____
Position(s) of Fillet: ____

POSTWELD HEAT TREATMENT

Temperature Range: N.A.
Time Range: -

PREHEAT

Preheat temp. Min: 18°C
Interpass Temp. Max.: 150°C
Preheat Maintenance: ____

GAS

		Percent Composition	
	Gas (es)	Mixture	Flow Rate
Shielding	Argon	99,99%	6÷10 l/1'
Trailing			
Backing	Argon	99,99%	10÷20 l/1'

(Gr. I1 EN 439)

ELECTRICAL CHARACTERISTICS

Current AC or DC: DC Polarity: See Below Amps (Range): See Below Volts (Range): See Below
Tungsten Electrode size and type: Ø2,4mm - EWTh-2
Mode of Metal Transfer for GMAW: N.A. Electrode Wire feed speed range: N.A.

TECNIQUE	
String or Weave Bead	String
Orifice or Gas Cup Size	Ø1/2"
Initial and Interpass Cleaning (Brushing, Grinding, etc.)	Brushing (S.S.wires) & Acetone
Method of back gouging	N.A.
Oscillation	N.A.
Contact Tube to Work Distance	N.A.
Multiple or Single Pass (per side)	Multiple
Multiple or Single Electrodes	Single
Travel Speed (Range)	See Below
Peening	NO
Other	-

Weld Layer (s)	Process	Filler Metal		Current		Volt Range	Travel speed Range	Max. Heat Input	Other
		Class	Ø	Type Polar	Amp. Range				
1	141	ER 5356	1,6 mm	AC	40÷60	14÷16	/	/	/
Others	141	ER 5356	2,0 mm	AC	40÷60	14÷16	/	/	/

Issued by Welding Coord.	Date	Approved by Q.C.M.	Date		
E. ZANON J. BASONI Welding Engineer	07/07/06	E. ZANON A. Del Santo	07/07/06		

E. ZANON	WELDING PROCEDURE SPECIFICATION Specifica Procedimento di Saldatura WELDING SPECIFICATION CONFORMING TO EN 15609-1	WPS N° 2870/15 Rev. No 1 Date 14/6/06 Pag. 1 to 2 (144)

Welding process (es) 141 (GTAW) Type (s) MANUAL WPAR N° 05790 ⚠

JOINTS

Joints Design See Sketch
Backing Yes X No
Backing Material (Type)

X Metal ☐ Nonfusing Metal
☐ Nonmetallic ☐ Other

BASE METALS

P-N° Groups N° 21.1 to P-N° Groups N° 21.1

Specification Type and Grade Al 1050A
to Specification Type and Grade Al 1050A

Chem. Analysis and Mech. Prop.
to Chem. Analysis and Mech. Prop.

Thickness range:
Base Metal: Groove - Fillet All
Pipe Ø Range: Groove - Fillet All
Other

FILLER METALS

	141 (GTAW)		
Spec. N° (SFA)	5.10		
AWS N° (Class)	ER 1100		
F-N°	21		
A-N°	N.A.		
Size of Filler Metals Ø	Ø2.4 mm		
Deposited Weld Metal	-		
Thickness Range:	-		
Groove	-		
Fillet	All		
Electrode-Flux (Class)	-		
Flux Trade Name	-		
Consumable Insert	NO		
T.N.	Sidarfil "Al 99,5"		

Issued by Welding Coord.	Date	Approved by Q.C.M.	Date		
E. ZANON J. BASONI Welding Engineer	07/07/06	E. ZANON A. Dal Santo	07/07/06		

E. ZANON	WELDING PROCEDURE SPECIFICATION Specifica Procedimento di Saldatura WELDING SPECIFICATION CONFORMING TO EN 15609-1	WPS N° 2870/15 Rev. No 1 Date 14/12/06 Pag. 2 to 2 (175)

POSITIONS		POSTWELD HEAT TREATMENT	
Position(s) of Groove	PA	Temperature Range	N.A.
Welding Progression: Up	Down	Time Range	-
Position(s) of Fillet			

PREHEAT		GAS			
			Percent Composition		
			Gas (es)	Mixture	Flow Rate
Preheat temp. Min	100°C	Shielding	Ar+He	70÷30%	10÷20 L/1'
Interpass Temp. Max.	150°C	Trailing			
Preheat Maintenance		Backing			
		(Gr. I3 EN 439)			

ELECTRICAL CHARACTERISTICS					
Current AC or DC	DC	Polarity	See Below	Amps (Range)	See Below
Volts (Range)	See Below				
Tungsten Electrode size and type	Ø4mm - EWTh-2				
Mode of Metal Transfer for GMAW	N.A.	Electrode Wire feed speed range	N.A.		

TECNIQUE	
String or Weave Bead	String
Orifice or Gas Cup Size	Ø1/2"
Initial and Interpass Cleaning (Brushing, Grinding, etc.)	Brushing (S.S.wires) & Acetone
Method of back gouging	N.A.
Oscillation	N.A.
Contact Tube to Work Distance	N.A.
Multiple or Single Pass (per side)	Multiple
Multiple or Single Electrodes	Single
Travel Speed (Range)	See Below
Peening	NO
Other	-

Weld Layer (s)	Process	Filler Metal		Current		Volt Range	Travel speed Range	Max. Heat Input	Other
		Class	Ø	Type Polar	Amp. Range				
All	141	ER 1100	2,4 mm	AC	160÷210	16÷19	/	/	/

Issued by Welding Coord.	Date	Approved by D.C.M.	Date		
E. ZANON J. BASON Welding Engineer	07/07/06	E. ZANON A. Del Santo	07/07/06		

E. ZANON	WELDING PROCEDURE SPECIFICATION Specifica Procedimento di Saldatura WELDING SPECIFICATION CONFORMING TO EN 15609-1	WPS N° 2870/15 Rev. No Date 07/07/06 Pag. 1 to 2 (11)

Welding process (es) 111 (SMAW) Type (s) Manual WPAR N° To be qualified

JOINTS

Jointa Design Build Up
Backing Yes X No
Backing Material (Type) Base metal

[X] Metal [ ] Nonfusing Metal
[ ] Nonmetallic [ ] Other

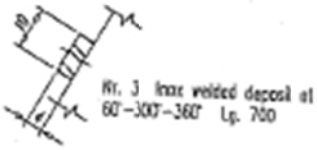

BASE METALS (EN 15608)

P-N° Groups N° 1.1 to P-N° Groups N° 1.1

Specification Type and Grade S 235 JR
to Specification Type and Grade S 235 JR

Chem. Analysis and Mech. Prop.
to Chem. Analysis and Mech. Prop.

Thickness range:
Base Metal: Groove - Fillet All
Pipe Ø Range: Groove - Fillet All
Other

FILLER METALS

	111 - SMAW		
Spec. N° (SFA)	5.4		
AWS N° (Class)	E 309LMo-17		
F-N°	6		
A-N°	8		
Size of Filler Metals Ø	Ø4 mm		
Deposited Weld Metal	-		
Thickness Range:	-		
Groove	-		
Fillet	All		
Electrode-Flux (Class)	-		
Flux Trade Name	-		
Consumable Insert	NO		
T.N.	Bohler Thyssen "CN 23/12 Mo-A"		

Issued by Welding Coord.	Date	Approved by Q.C.M.	Date		
E. ZANON J. BASONI Welding Engineer	07/07/06	E. ZANON A. Dal Santo	07/07/06		

E. ZANON	WELDING PROCEDURE SPECIFICATION Specifica Procedimento di Saldatura WELDING SPECIFICATION CONFORMING TO EN 10639-1	WPS N° 2870/20 Rev. No Date 14/12/06 Pag. 1 to 2 (184)

Welding process (es) 141 (GTAW) Type (s) Manual WPAR N° To be qualified

JOINTS

Joints Design See Sketch
Backing Yes ____ No X
Backing Material (Type) ____

[X] Metal [ ] Nonfusing Metal
[ ] Nonmetallic [ ] Other

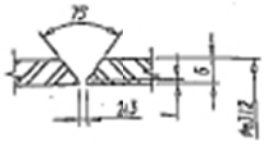

BASE METALS

P-N° ____ Groups N° 8.1 to P-N° ____ Groups N° 8.1

Specification Type and Grade A182 F 316L / A240 Tp 316L
to Specification Type and Grade A240 Tp 316L / A312 Tp 316L

Chem. Analysis and Mech. Prop. ____
to Chem. Analysis and Mech. Prop. ____

Thickness range:
Base Metal: Groove 3 to 12 mm Fillet All
Pipe Ø Range: Groove OD > 150 mm Fillet All
Other ____

FILLER METALS

	141 (GTAW)		
Spec. N° (SFA)	5.9		
AWS N° (Class)	ER 310MoL		
F-N°	6		
A-N°	9		
Size of Filler Metals Ø	Ø2,0 mm		
Deposited Weld Metal	-		
Thickness Range:	-		
Groove	Up to 12 mm		
Fillet	All		
Electrode-Flux (Class)	-		
Flux Trade Name	-		
Consumable Insert	NO		
T.N.	Sandvik "25.22.2LMn"		

Issued by Welding Coord.	Date	Approved by Q.C.M.	Date		
E. ZANON J. BASORI Welding Engineer	14/12/06	E. ZANON A. Dal Santo	14/12/06		

E. ZANON	WELDING PROCEDURE SPECIFICATION Specifica Procedimento di Saldatura WELDING SPECIFICATION CONFORMING TO EN 10609-1	WPS N° 2870/20 Rev. No 0 Date 14/12/06 Pag. 2 to 2 (185)

POSITIONS

Position(s) of Groove: PA
Welding Progression: Up ____ Down ____
Position(s) of Fillet: ____

POSTWELD HEAT TREATMENT

Temperature Range: N.A.
Time Range: -

PREHEAT

Preheat temp. Min: 18°C
Interpass Temp. Max.: 150°C
Preheat Maintenance: ____

GAS

	Percent Composition		
	Gas (es)	Mixture	Flow Rate
Shielding	Argon	99,99%	8÷14 L/1'
Backing	Argon	99,99%	8÷15 L/1'

ELECTRICAL CHARACTERISTICS

Current AC or DC: DC Polarity: See Below Amps (Range): See Below Volts (Range): See Below
Tungsten Electrode size and type: Ø2,4mm - EWTh-2
Mode of Metal Transfer for GMAW: N.A. Electrode Wire feed speed range: N.A.

TECNIQUE	
String or Weave Bead	String
Orifice or Gas Cup Size	Ø1/2"
Initial and Interpass Cleaning (Brushing, Grinding, etc.)	Brushing (S.S.wires) & Acetone
Method of back gouging	N.A.
Oscillation	N.A.
Contact Tube to Work Distance	N.A.
Multiple or Single Pass (per side)	Multiple
Multiple or Single Electrodes	Single
Travel Speed (Range)	See Below
Peening	NO
Other	-

Weld Layer (s)	Process	Filler Metal		Current		Volt Range	Travel speed Range	Max. Heat Input	Other
		Class	Ø	Type Polar	Amp. Range				
All	141	ER 310MoL	2,0 mm	DC-SP	110÷150	14÷18	6÷10	1,1	/
							cm/1'	KJ/mm	

Issued by Welding Coord.	Date	Approved by Q.C.M.	Date		
E. ZANON J. BASONI Welding Engineer	14/12/06	E. ZANON A. Del Zanna	14/12/06		

E. ZANON	WELDING PROCEDURE SPECIFICATION Specifica Procedimento di Saldatura WELDING SPECIFICATION CONFORMING TO EN 15609-1	WPS N° 2870/21 Rev. No Date 14/12/06 Pag. 1 to 2

Welding process (es) 131 (GMAW) Type (s) Machine WPAR N° 105788

JOINTS

Joints Design See Sketch
Backing Yes X No
Backing Material (Type) -

[X] Metal [ ] Nonfusing Metal
[ ] Nonmetallic [ ] Other

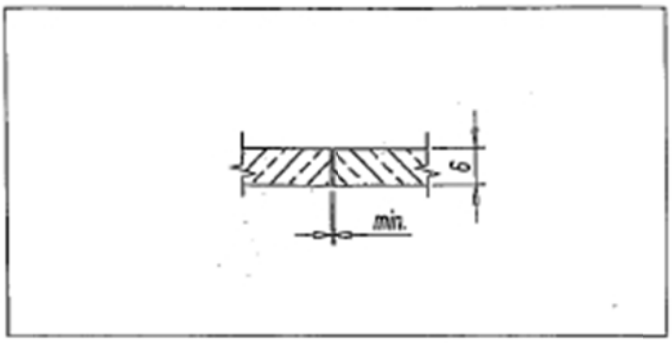

BASE METALS

P-N° Groups N° 21.1 to P-N° Groups N° 21.1

Specification Type and Grade Al 1050A
to Specification Type and Grade Al 1050A

Chem. Analysis and Mech. Prop.
to Chem. Analysis and Mech. Prop.

Thickness range:
Base Metal: Groove - Fillet All
Pipe Ø Range: Groove - Fillet All
Other

FILLER METALS

	131 (GMAW)		
Spec. N° (SFA)	5.10		
AWS N° (Class)	ER 1100		
F-N°	21		
A-N°	N.A.		
Size of Filler Metals Ø	Ø1,2 mm		
Deposited Weld Metal	-		
Thickness Range:	-		
Groove	-		
Fillet	All		
Electrode-Flux (Class)	-		
Flux Trade Name	-		
Consumable Insert	NO		
T.N.	Commersald "KOY 377"		

Issued by Welding Coord.	Date	Approved by Q.C.M.	Date		
E. ZANON	14/12/06	E. ZANON	14/12/06		

E. ZANON	WELDING PROCEDURE SPECIFICATION Specifica Procedimento di Saldatura WELDING SPECIFICATION CONFORMING TO EN 15609-1	WPS N° 2870/21 Rev. No 0 Date 14/12/06 Pag. 2 to 2 (181)

POSITIONS		POSTWELD HEAT TREATMENT	
Position(s) of Groove	PA	Temperature Range	N.A.
Welding Progression: Up	Down	Time Range	-
Position(s) of Fillet			

PREHEAT		GAS			
			Percent Composition		
			Gas (es)	Mixture	Flow Rate
Preheat temp. Min	18°C	Shielding	Argon	99,99%	20÷30 L/1'
Interpass Temp. Max.	150°C	Trailing			
Preheat Maintenance		Backing			
			(Gr. I1 EN 439)		

ELECTRICAL CHARACTERISTICS						
Current AC or DC	DC	Polarity	See Below	Amps (Range)	See Below	Volts (Range)	See Below
Tungsten Electrode size and type	None					
Mode of Metal Transfer for GMAW	Spray arc	Electrode Wire feed speed range	N.A.			

TECNIQUE	
String or Weave Bead	String
Orifice or Gas Cup Size	Ø3/4"
Initial and Interpass Cleaning (Brushing, Grinding, etc.)	Brushing (S.S.wires) & Acetone
Method of back gouging	N.A.
Oscillation	N.A.
Contact Tube to Work Distance	N.A.
Multiple or Single Pass (per side)	Multiple
Multiple or Single Electrodes	Single
Travel Speed (Range)	See Below
Peening	NO
Other	-

Weld Layer (s)	Process	Filler Metal		Current		Volt Range	Travel speed Range	Max. Heat Input	Other
		Class	Ø	Type Polar	Amp. Range				
All	131	ER 1100	1,2 mm	DC-RP	170÷220	24÷27	/	/	/

Issued by Welding Coord.	Date	Approved by Q.C.M.	Date		
E. ZANON J. BASON Welding Engineer	14/12/06	E. ZANON A. Dal Santo	14/12/06		

(192)

I.S.P.E.S.L. - ISTITUTO SUPERIORE PER LA PREVENZIONE E LA SICUREZZA SUL LAVORO
DIPARTIMENTO DI PADOVA

Verbale N° 106/2001 del 31 MAG. 2001 Cronologico N° RM-283530

MODULO DI VERBALE DI QUALIFICAZIONE DI PROCEDURA DI SALDATURA (WPAR)

Costruttore/Indirizzo:	Ettore Zanon S.p.A. Via Vicenza, 113 Schio (VI)	**N° di identificazione del Costruttore:**	WPS Nr. 2625/2
Codice/ Norma di prova:	ISPESL Raccolta S Rev.96 Ediz.99 - EN 288 ANCC Raccolta S Ed.78 *	**Data di esecuzione della saldatura:**	15.02.01

Campo di validità della qualificazione

Procedimento di saldatura:	141: TIG manuale 111: Elettrodo rivestito manuale	**Tipo di giunto:**	testa a testa senza ripresa al rovescio (BW)
Metallo (i) base:	ASME SA 240 Tp 304L (SAC 8.1)	**Spessore del materiale base [mm]:**	da 7.5 a 30
		Diametro esterno del tubo [mm]:	-
Tipo del metallo d'apporto:	141: Bohler EAS2-IG AWS SFA 5.9 ER 308L colata no 503740 111: Bohler FOX AS2; AWS SFA 5.4 E 308L-17 colata n°61402 (3.25), n° 60556 (4)	**Tipo di corrente di saldatura:**	141: C.C. / polarità negativa 111:C.C. / polarità positiva
Gas di protezione:	141: Argon 99.9% - Gruppo I1 EN 439	**Flusso:**	-
Posizioni di saldatura:	PA		
Temperatura di esercizio:	* Come il materiale base, e comunque non meno di - 120 °C		
Preriscaldo:	≥ 10 °C	**Temperatura di interpass:**	≤ 150 °C
Trattamento termico e/o invecchiamento dopo saldatura:	-		

ALTRE INFORMAZIONI :

Vedere WPS N° 2625/2 del 15.02.01

Si certifica che i saggi di prova sono stati preparati, saldati e controllati con esito soddisfacente in conformità ai requisiti del codice/norma di prove sopra indicato.

Luogo: Schio (VI) **Data di emissione:** 31 MAG. 2001 **Esaminatore o Ente di prova:**

Allegati: WPS N° 2625/2 e risultati delle prove **Nome, data, firma:**

Dott. Ing. Franco Musilli

193

I.S.P.E.S.L. - ISTITUTO SUPERIORE PER LA PREVENZIONE E LA SICUREZZA SUL LAVORO
DIPARTIMENTO DI PADOVA

Verbale N° 406/2001 del 31 MAG. 2001 Cronologico N° MH-283590.

RISULTATI DELLE PROVE (1)

Esame visivo: soddisfacente — Controllo radiografico *): soddisfacente

Controllo con liquidi penetranti/magnetoscopico *): soddisfacente — Controllo ultrasonoro *): -

PROVE DI TRAZIONE — Temperatura [°C]: Ambiente

N°	Pos.	Tipo**)	Dimensioni [mm x mm]	Re [N/mm²]	Rp 0,2 [N/mm²]	Rm [N/mm²]	A [%] in Lo [mm]: 50	Z [%]	Posizione della frattura***)	Osservazioni
Valori ammessi					≥275	≥481	≥30		--	--
TT1		TW	15.2x24.8	-	-	597	-	-	BM	
TT2		TW	14.8x24.9	-	-	605	-	-	BM	
TL1		LW	diam. 9.90	-	481	629	31.2	-		

**) TW = Trasversale alla saldatura
LW = Longitudinale alla saldatura

***) BM = Materiale base
HAZ = Zona termicamente alterata
WM = Zona fusa
RFL = Rottura fuori tratto utile Lo

PROVE DI PIEGAMENTO — Diametro del mandrino: 4 x t

N°	Pos	Tipo**)	Spessore [mm]	Allungamento di piegatura *) α°	Lo [mm]	%	Risultato	N°	Pos	Tipo**)	Spessore [mm]	Allungamento di piegatura α°	Lo [mm]	%	Risultato
PL1		L	10	120			BUONO								
PL2		L	10	120			BUONO								
PL3		L	10	120			BUONO								
PL4		L	10	120			BUONO								

**) D = Piega al dito R = Piega al rovescio L = Piega laterale

PROVE DI RESILIENZA — Tipo: ISO-V — Valori richiesti [J]: ≥

N°	Posizione	Direzione dell'intaglio	Dimensione [mm x mm]	Temp. [°C]	Valori rilevati [J] 1 2 3	Σ/n [J]	Osservazioni
					non richiesto	0 0 0 0 0	

*) se richiesto

(139)

I.S.P.E.S.L. - ISTITUTO SUPERIORE PER LA PREVENZIONE E LA SICUREZZA SUL LAVORO
DIPARTIMENTO DI PADOVA

Verbale N° 106/2001 del 31 MAG. 2001 Cronologico N° HH-283530

RISULTATI DELLA PROVE (2)

ANALISI CHIMICA [%] *)

BM =Materiale base
WM =Zona fusa

N°	Tipo	C	Si	Mn	P	S						
					Ved. cert. ISPESL Roma nc DTS-IX/133/01/AC del 5-4-01							

PROVA DI DUREZZA *) Non richiesta

Posizione delle impronte (Schizzo) *)

Tipo/ carico:

N°	Linea di misura	Materiale base			Zona termicamente alterata			Zona fusa			Zona termicamente alterata			Materiale base		

ESAME METALLOGRAFICO Allegati: 2

N°	Posizione	Tipo di esame Macro	Tipo di esame Micro	Analisi metallografica
1		X		Buona penetrazione, assenza di difetti (Ved. certificato N° SM-09/01 del 08.05.01)
2	WM		X	Assenza di microcricche e di difetti di struttura dei grani (Ved. Certif. N° EM-06/01 del 08.05.01)
2	HAZ		X	Assenza di microcricche e di difetti di struttura dei grani (Ved. Certif. N° EM-06/01 del 08.05.01)

ALTRE PROVE *) / OSSERVAZIONI :

I risultati delle prove sono: [X] conformi [ ] non conformi

Prove eseguite alla presenza di: Funzionari rari dell' ISPESL.

I risultati delle prove sono conformi alle specifiche.

Nome e firma: Dott. Ing. Franco Musilli

Esaminatore o Ente di Prova:

*) se richiesto

I.S.P.E.S.L. - ISTITUTO SUPERIORE PER LA PREVENZIONE E LA SICUREZZA SUL LAVORO
DIPARTIMENTO DI PADOVA

188

Verbale N°204/2000 del 27.06.2000 Cronologico N° GG 315368

MODULO DI VERBALE DI QUALIFICAZIONE DI PROCEDURA DI SALDATURA (WPAR)

Costruttore/indirizzo:	Ettore Zanon S.p.A. Via Vicenza, 113 Schio (VI)	**N° di identificazione del Costruttore :**	WPS Nr. 511
Codice/ Norma di prova:	ISPESL Raccolta S Rev.95 Ediz.99 - EN 288 ANCC Raccolta S Ed.78 *	**Data di esecuzione della saldatura:**	09.06.00

Campo di validità della qualificazione

Procedimento di saldatura:	141: TIG manuale	**Tipo di giunto:**	giunto testa a testa di tubo fisso ad asse inclinato a 45°
Metallo (i) base:	ASME SA 312 TP 304 (SAC 8.1)	**Spessore del materiale base [mm]:**	da 3 a 12.01
		Diametro esterno del tubo [mm]:	da 72.1 a 228.6
Tipo del metallo d'apporto:	Bohler AS2-IG: AWS SFA 5.9 ER308 colata n° 60436	**Tipo di corrente di saldatura:**	C.C. / polarità negativa
Gas di protezione:	Argon 99.99% - Gruppo I1 EN 439	**Flusso:**	-
Posizioni di saldatura:	H-LO45		
Temperatura di esercizio:	* Come il materiale base, e comunque non meno di - 120 °C		
Preriscaldo:	≥ 10 °C	**Temperatura di interpass:**	≤ 175 °C
Trattamento termico e/o invecchiamento dopo saldatura:	-		

ALTRE INFORMAZIONI :

Vedere WPS N° 511 del 09.06.00

Si certifica che i saggi di prova sono stati preparati, saldati e controllati con esito soddisfacente in conformità ai requisiti del codice/norma di prove sopra indicato

Luogo: Schio (VI) **Data di emissione:** 27 GIU. 2000 **Esaminatore o Ente di prova:**

Allegati: WPS N° 511 e risultati delle prove **Nome, data, firma:** Dott. Ing. Franco Musilli

I.S.P.E.S.L. - ISTITUTO SUPERIORE PER LA PREVENZIONE E LA SICUREZZA SUL LAVORO
DIPARTIMENTO DI PADOVA

189

Verbale N° 204 | 2000 del 27.06.2000 Cronologico N° GG 315368

RISULTATI DELLA PROVE (2)

ANALISI CHIMICA [%] *)

BM -Materiale base
WM -Zona fusa

N°	Tipo	C	Si	Mn	P	S						
					Ved. cert. Bohler per il mat. d' apporto N° 25609 del 3.5.73							

PROVA DI DUREZZA *) Non richiesta

Posizione delle impronte (Schizzo) *)

Tipo/ carico:

N°	Linea di misura	Materiale base			Zona termicamente alterata			Zona fusa			Zona termicamente alterata			Materiale base		

ESAME METALLOGRAFICO Allegati: 2

N°	Posizione	Tipo di esame Macro	Micro	Analisi metallografica
1		X		Buona penetrazione, assenza di difetti (Ved. certificato ANCC N° 82/74 del 23.10.74)
2	WM		X	Assenza di microcricche e di difetti di struttura dei grani (Ved. certificato N° EM-20/00 del 15.6.00)
2	HAZ		X	Assenza di microcricche e di difetti di struttura dei grani (Ved. certificato N° EM-20/00 del 15.6.00)

ALTRE PROVE *) / OSSERVAZIONI :

I risultati delle prove sono: [X] conformi [ ] nonconformi

Prove eseguite alla presenza di:

Nome e firma:

I risultati delle prove sono conformi alle specifiche.

Esaminatore o Ente di Prova:

*) se richiesto

Dott. Ing. Franco Musilli

ISTITUTO SUPERIORE PREVENZIONE E SICUREZZA LAVORO PADOVA Dipartimento di Padova

I.S.P.E.S.L. - ISTITUTO SUPERIORE PER LA PREVENZIONE E LA SICUREZZA SUL LAVORO
DIPARTIMENTO DI PADOVA

(190)

Verbale N° 204/2008 del 27.06.2008 Cronologico N° GG 315368

RISULTATI DELLE PROVE (1)

Esame visivo: soddisfacente **Controllo radiografico *):** soddisfacente

Controllo con liquidi penetranti/magnetoscopico *): soddisfacente **Controllo ultrasonoro *):** -

PROVE DI TRAZIONE **Temperatura [°C]:** Ambiente

N°	Pos.	Tipo**)	Dimensioni [mm x mm]	Re [N/mm²]	Rp 0,2 [N/mm²]	Rm [N/mm²]	A [%] in Lo [mm]: 50	Z [%]	Posizione della frattura***)	Osservazioni
Valori ammessi						≥515	-		–	–
TT1		TW	5.1x18.8	-	-	556	-	-	WM	
TT2		TW	5.2x19.0	-	-	562	-	-	WM	

**) TW = Trasversale alla saldatura
LW = Longitudinale alla saldatura

***) BM = Materiale base
HAZ = Zona termicamente alterata
WM = Zona fusa
RFL = Rottura fuori tratto utile Lo

PROVE DI PIEGAMENTO **Diametro del mandrino:** 3 x t *)

N°	Pos	Tipo**)	Spessore [mm]	Allungamento di piegatura *) α	Lo [mm]	%	Risultato	N°	Pos	Tipo**)	Spessore [mm]	Allungamento di piegatura α	Lo [mm]	%	Risultato
PD1		D	25	180			BUONO								
PD2		D	25	180			BUONO								
PR2		R	25	180			BUONO								
PR3		R	25	180			BUONO								

**) D = Piega al dritto R = Piega al rovescio L = Piega laterale *) ANCC Raccolta S Ediz. 78

PROVE DI RESILIENZA **Tipo:** ISO-V **Valori richiesti [J]:** ≥

N°	Posizione	Direzione dell'intaglio	Dimensione [mm x mm]	Temp. [°C]	Valori rilevati [J] 1 2 3	Σ/n [J]	Osservazioni
					non richiesto	0 0 0 0 0	

*) se richiesto

CEOC
CONFÉDÉRATION EUROPÉENNE D'ORGANISMES DE CONTRÔLE

TÜV BAYERN HESSEN SACHSEN SÜDWEST E.V.

TÜV SÜDDEUTSCHLAND

Prüf-Nr.: I- 105788 Auftrags-Nr.: 123055 Seite 1 von 3
Inspection No. Reference No.: Page Page
N° d'inspection N° de référence: de

207

SCHWEISSVERFAHREN - PRÜFUNGSBESCHEINIGUNG (WPAR)

WELDING PROCEDURE APPROVAL TEST CERTIFICATE / CERTIFICAT DE QUALIFICATION D'UN MODE OPÉRATOIRE DE SOUDAGE

Prüfstelle: Inspecting Authority: Organisme de contrôle: TÜV BAYERN HESSEN SACHSEN SÜDWEST E.V. Westendstraße 199 D-80686 München

Zeichen: Sign.: I-BB-FI

Hersteller / Anschrift: Manufacturer / Address: Constructeur / Adresse: Ettore Zanon S.p.A Via Vicenza, 113 Schio (Vicenza) Italy

Belog-Nr. des Herstellers: Manufacturer's Reference No.: N° de référence du constructeur: WPS Nr. 01/02

Verschrift/Prüfnorm: Code/Testing Standard: Code/Norme d'essai: EN 288 – 4

Datum der Schweißung: Date of Welding: Date du soudage: 23.7.02

GELTUNGSBEREICH - *RANGE OF APPROVAL - DOMAINE DE VALIDITÉ*

Schweißprozeß: Welding Process: Procédé de soudage: 131:(inert gas welding, MIG)

Nahtart: Joint Type: Type de joint: Fillet weld on plate (BW), single pass

Werkstoffgruppe: Parent Metal Group: Matériaux: Alumunium Al 1050A-H12 EN 485 group 21

Dicke [mm]: Parent Metal Thickness [mm]: Épaisseur du matériau [mm]: plate: 6 to 8.25 throat thick.: 2.6 to 5.3

Außendurchmesser [mm]: Pipe Outside Diameter [mm]: Diamètre extérieur [mm]: >500 mm

Zusatzwerkstoff Bezeichn.: Filler Metal Type/Designation: Caractéristique du métal d'apport: Commersalt Koy 377 (AWS A 5.10; ER 1100) Heat no. 9183

Strom art: Type of Welding Current: Nature du courant de soudage: DC/plus

Schutzgas / Wurzelschutz: Shielding Gas / Backing Gas: Gaz de protection / Purge: Argon 99.9% (Gr.I1 EN 439)/ -

Pulver: Flux: Flux: -

Schweißpositionen: Welding Positions: Positions de soudage: PA

Betriebstemperatur: Working Temperature: Température de service: Wie Grundwerkstoff bzw. Zusatzwerkstoff, jedoch nicht tiefer als -233 °C
(As base material and filler metal respectively, however not lower than)
Comme métal de base et métal d'apport respectivement, pourtant non sous)

Vorwärmung: Preheat: Préchauffage: without

Zwischenlagentemperatur: Interpass temperature: Température entre passes: ≤ 150 °C

Wärmenachbehandlung: Post Weld Heat Treatment: Traitement thermique après soudage: 3 times immersed in liquified argon, 10 min each

Gültigkeit der Prüfung bis: Validity of Approval until: Certificat valable jusqu'au: as per EN 288-4

SONSTIGE ANGABEN - *OTHER INFORMATION - AUTRES PARAMÈTRES*

EINZELHEITEN ZUR PRÜFSTÜCKSCHWEISSUNG UND SCHWEISSANWEISUNG (WPS): siehe Anlage

TÜV SÜDDEUTSCHLAND BAD TÖLZ BETRIEB TÜV

Hiermit wird bestätigt, daß die Prüfungsschweißungen in Übereinstimmung mit den Anforderungen der vorbezeichneten Norm zufriedenstellend vorbereitet, geschweißt und geprüft wurden. / *Certified that test welds were prepared, welded and tested satisfactorily in accordance with the requirements of the code or the testing standard indicated above.* / *Nous certifions que les essais de soudage ont été préparés, soudés et contrôlés conformément aux exigences du code ou de la norme d'essai ci-dessus mentionné(e).*

Ort: Location: Lieu: MILANO

Datum der Ausstellung: Date of issue: Date d'émission: 2002-09-17

Name und Unterschrift: Name and Signature: Nom et signature: (Dipl.-Ing. A.Fichera)

Anlagen: Annexes: Annexes: WPS No. 01/02., Tests reports SM-32/02.

Prüfstelle: Inspecting Authority: Organisme de contrôle: TÜV BAYERN HESSEN SACHSEN SÜDWEST E.V. (CEOC Mitglieds-Organisation)

CEOC
CONFÉDÉRATION EUROPÉENNE D'ORGANISMES DE CONTRÔLE

TÜV BAYERN HESSEN SACHSEN SÜDWEST E.V.

TÜV SÜDDEUTSCHLAND

Prüf-Nr.: / Inspection No. / N° d'inspection: I- 105788

Auftrags-Nr.: / Reference No.: / N° de référence: 123065

Seite / Page / Page 2 von / of / de 3

208

PRÜFERGEBNISSE (1)

TEST RESULTS (1) / RÉSULTATS DES ESSAIS (1)

Sichtprüfung: / Visual Examination: / Examen visuel: erfüllt / satisfactory / satisfaisant

Durchstrahlungsprüfung *): / Radiography *): / Radiographie *): -

Farbeindring- / Magnetpulverprüfung *): / Penetrant / Magnetic Particle Test *): / Ressuage / Magnétoscopie *): Penetrant: Satisfactory

Ultraschallprüfung *): / Ultrasonic Examination *): / Ultra-sons *): -

ZUGPRÜFUNG - TENSILE TESTS - ESSAIS DE TRACTION

Temperatur [°C]: / Temperature/Température:

Nr. / No. / N°	Pos. / Loc. / Pos.	Art **) / Sort **) / Nature **)	Abmessungen / Dimensions / Dimensions (mm x mm)	Ra [N/mm²]	Rp 0,2 [N/mm²]	Rm [N/mm²]	k [%] / ani on / ae Lg(mm) 50	Z [%]	Bruchlage ***) / Fracture Locat. / Cassure Posit.	Bemerkungen / Remarks / Remarques
Anforderungen / Requirements / Exigences									–	–
					Not required					

**) TW = Quer zur Naht - Transv. to the Weld - Travers soudure
AW = Schweißgutprobe - All-weld Metal - Métal déposé

***) GW = Grundwerkstoff - Base Material - Métal de base
WEZ = WEL -HAZ - ZAT
SG = Schweißgut - Weld Metal - Métal déposé
GWL = Bruch außerh. Lg - Fracture outside Lg - Cassure hors de Lg

BIEGEPRÜFUNG - BEND TEST - ESSAI DE PLIAGE

Biegedorn-Durchmesser: / Former Diameter:/Diamètre du mandrin:

Nr. / No. / N°	Pos. / Loc. / Pos.	Art **) / Sort **) / Nature **)	Dicke / thickn. / epaiss. [mm]	Biegewinkel-dehnung / Bend. angle / Elongation / Allongement de: ∢	Lg [mm]	%	Bemerkung / Remark / Remarque	Nr. / No. / N°	Pos. / Loc. / Pos.	Art **) / Sort **) / Nature **)	Dicke / thickn. / epaiss.	Biegewinkel-dehnung / Bend. angle / Elongation / Allongement de pliage: ∢	Lg [mm]	%	Bemerkung / Remark / Remarque
							Not required								

**) D = Decklage in Zugzone - Face - Endroit W = Wurzel/Gegenseite in Zugzone - Root/Back side - EnversS = Seitenbiegeprobe - Side - Cote

KERBSCHLAGBIEGEPRÜFUNG

IMPACT TESTS - ESSAIS DE RÉSILIENCE

Art: / Sort: / Nature:

Anforderung [J]: / Requirements [J]: / Exigences [J]:

Nr. / No. / N°	Position / Location / Position	Kerblage / Notch Location / Sens de l'entaille	Größe / Size/Dimens. [mm x mm]	Temp. / Temp./Temp. [°C]	Werte - Values - Valeurs [J] 1 2 3	Σ/k [J]	Bemerkungen / Remarks / Remarques
				Not required			

- bei Untermaßproben sind die Kerbschlagwerte hochzurechnen

Arbeitsvermögen des Pendelschlagwerks: 300 J

*) falls erforderlich / if required / si nécessaire

CEOC
COMPÉDÉRATION EUROPÉENNE D'ORGANISMES DE CONTRÔLE

TÜV BAYERN HESSEN SACHSEN SÜDWEST E.V.

TÜV SÜDDEUTSCHLAND

Prüf-Nr.: / Inspection No. / N° d'inspection: I- 105788

Auftrag-Nr.: / Reference No.: / N° de référence: 123065

Seite / Page / Page 2 von / of / de 3

205

PRÜFERGEBNISSE (2)

TEST RESULTS (2) / RÉSULTATS DES ESSAIS (2)

CHEMISCHE ANALYSE [%]

*CHEMICAL COMPOSITION [%] - ANALYSE CHIMIQUE [%] *)*

GW =Grundwerkstoff - *Base Material - Métal de base*
SS =Schweißgut - *Weld Metal - Métal déposé*

Nr. / No. / N°	Art / Sort / Nature	C	Si	Mn	P	S						
					Not required							

Not required

HÄRTEPRÜFUNG *)

*HARDNESS TEST *) - ESSAI DE DURETÉ *)*

Lage der Messungen (Skizze) *)
*Location of Measurements (Sketch) *)*
*Localisation des mesures (croquis) *)*

Art/Lent: - *Type / Load: - Type / Charge:*

Nr. / No. / N°	Meßreihe / Measuring Line / Ligne de mesure	Grundwerkstoff / Base Material / Métal de base			WEZ / HAZ / ZAT			Schweißgut / Weld Metal / Métal déposé			WEZ / HAZ / ZAT			Grundwerkstoff / Base Material / Métal de base		

GEFÜGEUNTERSUCHUNG - *TEXTURE EXAMINATION - EXAMEN DE LA STRUCTURE*

Anlage: 1
Anmerkungen/Signature:

Nr. / No. / N°	Position / Location / Position	Gefüge / Texture/Structur: Makro / Macro	Gefüge / Texture/Structur: Mikro / Micro	Gefügebeurteilung / Texture Assessment/Analyse de la structure
1		X		Welding without defect (No SM 32/02)

Bildbeilagen: Seite / Exposition

TÜV SÜDDEUTSCHLAND TÜV BAU UND BETRIEB GMBH

SONSTIGE PRÜFUNGEN - *OTHER TESTS - AUTRES ESSAIS *)* / BEMERKUNGEN - *REMARKS - REMARQUES*

Die Prüfergebnisse sind:
Test Results were/Les résultats des essais sont

[X] zufriedenstellend / *acceptable / acceptables*

[ ] nicht zufriedenstellend / *not acceptable / non acceptables*

Die Prüfungen wurden ausgeführt in Anwesenheit von:
Test carried out in the presence of:
Les essais ont été effectués en présence de:

Dipl.-Ing. A. Fichera

Name und Unterschrift:
Name and Signature:
Nom et signature:

(Dipl.Ing. A. Fichera)
TÜV BAYERN HESSEN SACHSEN SÜDWEST E.V.
(CEOC Mitglieds-Organisation)

Die Ergebnisse der Prüfungen entsprechen den Prüfgrundlagen.
The results of the above approval tests are in accordance with the specification.
Les résultats de l'essai de qualification sont conformes à la specification.

Prüfstelle:
Inspecting Authority:
Organisme de contrôle:

*) falls erforderlich / *if required / si nécessaire*

CEOC
CONFÉDÉRATION EUROPÉENNE D'ORGANISMES DE CONTRÔLE

TÜV BAYERN HESSEN SACHSEN SÜDWEST E.V.

TÜV SÜDDEUTSCHLAND

Prüf-Nr.: I- 105790 Auftrags-Nr.: 123065 Seite 1 von 3
Inspection No. Reference No.: Page of
N° d'inspection N° de référence: Pagina da

211

SCHWEISSVERFAHREN - PRÜFUNGSBESCHEINIGUNG (WPAR)

WELDING PROCEDURE APPROVAL TEST CERTIFICATE / CERTIFICAT DE QUALIFICATION D'UN MODE OPÉRATOIRE DE SOUDAGE

Prüfstelle: Inspecting Authority: Organisme de contrôle: TÜV BAYERN HESSEN SACHSEN SÜDWEST E.V. Westendstraße 199 D-80686 München

Zeichen: Sign: Sign.: I-BB-FI

Hersteller / Anschrift: Manufacturer / Address: Constructeur / Adresse: Ettore Zanon S.p.A Via Vicenza, 113 Schio (Vicenza) Italy

Beleg-Nr. des Herstellers: Manufacturer's Reference No.: N° de référence du constructeur: WPS Nr. 03/02

Vorschrift/Prüfnorm: Code/Testing Standard: Code/Norme d'essai: EN 288 – 4

Datum der Schweißung: Date of Welding: Date du soudage: 29.7.02

GELTUNGSBEREICH - *RANGE OF APPROVAL - DOMAINE DE VALIDITÉ*

Schweißprozeß: Welding Process: Procédé de soudage: 141:(tungsten inert gas, TIG)

Nahtart: Joint Type: Type de joint: Fillet weld on plate (FW), single pass

Werkstoffgruppe: Parent Metal Group: Matériaux: Aluminium Al 1050A-H12 EN 485 group 21 to Al 3003 H22 group 21

Dicke [mm]: Parent Metal Thickness [mm]: Epaisseur du matériau [mm]: plate: 12 to 16.5 throat thick.: 1.6 to 3.2

Außendurchmesser [mm]: Pipe Outside Diameter [mm]: Diamètre extérieur [mm]: >500 mm

Zusatzwerkstoff/Bezeichn.: Filler Metal Type/Designation: Caractéristique du métal d'apport: Sogas Sider AL99.5 *AWS* A5.10: ER1100 Heat no 1183/3

Stromart: Type of Welding Current: Nature du courant de soudage: AC

Schutzgas / Wurzelschutz: Shielding Gas / Backing Gas: Gaz de protection / Purge: Argon 70%-Helium 30% (Gr.I3 EN 439)/ -

Fluß: Flux: Flux:

Schweißpositionen: Welding Positions: Positions de soudage: PF

Betriebstemperatur: Working Temperature: Température de service: Wie Grundwerkstoff bzw. Zusatzwerkstoff, jedoch nicht tiefer als -233 °C
(As base material and filler metal respectively, however not lower than)
Comme métal de base et métal d'apport respectivement, pourtant non sous)

Vorwärmung: Preheat: Préchauffage: 100°C

Zwischenlagentemperatur: Interpass temperature: Température entre passes: ≤ 150 °C

Wärmenachbehandlung: Post Weld Heat Treatment: Traitement thermique après soudage: 3 times immersed in liquified argon, 10 min each

Gültigkeit der Prüfung bis: Validity of Approval until: Certificat valable jusqu'au: as per EN 288-4

SONSTIGE ANGABEN - *OTHER INFORMATION - AUTRES PARAMÈTRES*

EINZELHEITEN ZUR PRÜFSTÜCKSCHWEISSUNG UND SCHWEISSANWEISUNG (WPS): siehe Anlage 1

TÜV SÜDDEUTSCHLAND BAYERN HESSEN SACHSEN GEPRÜFT

Hiermit wird bestätigt, daß die Prüfungsschweißungen in Übereinstimmung mit den Anforderungen der vorbezeichneten Vorschriften bzw. Prüfnormen zufriedenstellend vorbereitet, geschweißt und geprüft wurden. / *Certified that test welds were prepared, welded and tested satisfactorily in accordance with the requirements of the code or the testing standard indicated above. / Nous certifions que les essais de soudage ont été préparés, soudés et contrôlés conformément aux exigences du code ou de la norme d'essai ci-dessus mentionnés.*

Ort: Location: Lieu: MILANO

Datum der Ausstellung: Date of issue: Date d'émission: 2002-09-17

Name und Unterschrift: Name and Signature: Nom et signature: (Dipl.-Ing. K. Richers)

Anlagen: Annexes: Annexes: WPS No. 03/02, Tests reports SM 33/02,

Prüfstelle: Inspecting Authority: Organisme de contrôle: TÜV BAYERN HESSEN SACHSEN SÜDWEST E.V. (CEOC Mitglieds-Organisation)

CEOC
COMPÉDIATION EUROPÉENNE D'ORGANISMES DE CONTRÔLE

TÜV BAYERN HESSEN SACHSEN SÜDWEST E.V.

TÜV SÜDDEUTSCHLAND

Prüf-Nr.: I- 105790
Inspection No.
N° d'inspection

Auftrags-Nr.: 123065
Reference No.:
N° de référence:

Seite 2 von 3
Page of
Page de

PRÜFERGEBNISSE (1)

TEST RESULTS (1) / RÉSULTATS DES ESSAIS (1)

212

Sichtprüfung:
Visual Examination:
Examen visuel:

erfüllt
satisfactory
satisfaisant

Durchstrahlungsprüfung *):
*Radiography *):*
*Radiographie *):*

Farbeindring- / Magnetpulverprüfung *):
*Penetrant / Magnetic Particle Test *):*
*Ressuage / Magnétoscopie *):*

Penetrant: Satisfactory

Ultraschallprüfung *):
*Ultrasonic Examination *):*
*Ultra-sons *):*

ZUGPRÜFUNG - TENSILE TESTS - ESSAIS DE TRACTION

Temperatur [°C]:
Temperature:/Température:

Nr. No. N°	Pos. Loc. Pos.	Art **) Sort **) Nature **)	Abmessungen Dimensions Dimensions [mm x mm]	R_a [N/mm²]	$R_{p\,0,2}$ [N/mm²]	R_m [N/mm²]	A [%] an / on / en Lo [mm]: 50	Z [%]	Bruchlage ***) Fracture Locat. Cassure Posit.	Bemerkungen Remarks Remarques
Anforderungen Requirements / Exigences									–	–
					Not required					

**) TW = Quer zur Naht - Transv. to the Weld - Transvers.soudure
AW = Schweißgutprobe - All-weld Metal - Métal déposé

***) GW = Grundwerkstoff - Base Material - Métal de base
WEZ = WEZ - HAZ - ZAT
SG = Schweißgut - Weld Metal - Métal déposé
GWL = Bruch außerh. Lg - Fracture outside Lg - Cassure hors de Lg

BIEGEPRÜFUNG - BEND TEST - ESSAIDE PLIAGE

Biegedorn-Durchmesser:
Former Diameter/Diamètre du mandrin:

Nr. No. N°	Pos. Loc. Pos.	Art **) Sort **) Nature **)	Dicke Thickn. epaiss. [mm]	Biegewinkel-dehnung Bend. angle /Elongation Allongement de ∢	Lo [mm]	%	Bemerkung Remark Remarque	Nr. No. N°	Pos. Loc. Pos.	Art **) Sort **) Nature **)	Dicke Thickn. epaiss.	Biegewinkel-dehnung Bend. angle /Elongation Allongement de pliage ∢	Lo [mm]	%	Bemerkung Remark Remarque
							Not required								

**) D = Decklage in Zugzone - Face - Endroit W = Wurzel/Gegenseite in Zugzone - Root/Back side - EnversS = Seitenbiegeprobe - Side - Cote

KERBSCHLAGBIEGEPRÜFUNG
IMPACT TESTS - ESSAIS DE RÉSILIENCE

Art:
Sort:
Nature:

Anforderung [J]:
Requirements [J]:
Exigences [J]:

Nr. No. N°	Position Location Position	Kerblage Notch Location Sens de l'entaille	Größe Size/Dimens. [mm x mm]	Temp. Temp./Temp. [°C]	Werte - Values - Valeurs [J] 1 2 3	Ente [J]	Bemerkungen Remarks Remarques
				Not required			

- bei Untermaßproben sind die Kerbschlagwerte hochzurechnen

Arbeitsvermögen des Pendelschlagwerks: 300 J

*) falls erforderlich / *if required* / *si nécessaire*

CEOC
CONFÉDÉRATION EUROPÉENNE D'ORGANISMES DE CONTRÔLE

TÜV BAYERN HESSEN SACHSEN SÜDWEST E.V.

TÜV SÜDDEUTSCHLAND

Prüf-Nr.: I- 105790 Auftrags-Nr.: 123065 Seite 2 von 3
Inspection No. Reference No.: Page of
N° d'inspection N° de référence: Page de

213

PRÜFERGEBNISSE (2)
TEST RESULTS (2) / RÉSULTATS DES ESSAIS (2)

CHEMISCHE ANALYSE [%]
CHEMICAL COMPOSITION [%] - ANALYSE CHIMIQUE [%] *)

GW =Grundwerkstoff - *Base Material - Métal de base*
SG =Schweißgut - *Weld Metal - Métal déposé*

Nr. No. N°	Art Sort Nature	C	Si	Mn	P	S						
					Not required							

Not required

HÄRTEPRÜFUNG *)
*HARDNESS TEST *) - ESSAI DE DURETÉ *)*

Lage der Messungen (Skizze) *)
*Location of Measurements (Sketch) *)*
*Localisation des mesures (croquis) *)*

Art/Last: - *Type / Load: - Type / Charge:*

Nr. No. N°	Meßreihe Measuring Line Ligne de mesure	Grundwerkstoff Base Material Métal de base			WEZ HAZ ZAT			Schweißgut Weld Metal Métal déposé			WEZ HAZ ZAT			Grundwerkstoff Base Material Métal de base		

GEFÜGEUNTERSUCHUNG - *TEXTURE EXAMINATION - EXAMEN DE LA STRUCTURE*

Anlage: 1
Annexe/Annexe:

Nr. No. N°	Position Location Position	Gefüge Texture/Structur Makro Macro	Gefüge Texture/Structur Mikro Micro	Gefügebeurteilung Texture Assessment/Analyse de la structure
1		X		Welding without defect (No SM 33/02)

Bildbeilagen: ohne Echoaufn.

SONSTIGE PRÜFUNGEN - *OTHER TESTS - AUTRES ESSAIS* *) / BEMERKUNGEN - *REMARKS - REMARQUES*

Die Prüfergebnisse sind:
Test Results were/Les résultats des essais sont
[X] zufriedenstellend *acceptable / acceptables*
[ ] nicht zufriedenstellend *not acceptable / non acceptables*

Die Prüfungen wurden ausgeführt in Anwesenheit von:
Test carried out in the presence of:
Les essais ont été effectués en présence de:
Dipl.-Ing. A. Fichere

Name und Unterschrift:
Name and Signature:
Nom et signature:

Prüfstelle:
Inspecting Authority:
Organisme de contrôle:

TÜV BAYERN HESSEN SACHSEN SÜDWEST E.V.
(CEOC Mitglieds-Organisation)

Die Ergebnisse der Prüfungen entsprechen den Prüfvorgaben.
The results of the above approval tests are in accordance with the specification.
Les résultats de l'essai de qualification sont conformes a la specification.

*) falls erforderlich / *if required / si nécessaire*

Certificate no: VEN 06002581/3
Page 1 of 3

223

Lloyd's Register — Welding Procedure Qualification Certificate (EN ISO 15614-1) Energy and Transportation

Manufacturer's Welding Procedure Qualification Record No.: 2877/1

Examining body Reference No: - / -

Manufacturer: ETTORE ZANON S.p.A.
Address: Via Vicenza, 113
36015 Schio (Vicenza)
ITALY

Code/Testing Standard: EN 15614-1:2004 + SPIRAL Spec. SP2-SACM-CM41 Ver. 2.8 (*)

Date of Welding: 23 August 2006

Range of Qualification

Welding Process(es):	141 (GTAW)
Type of joint and weld:	Butt weld in tube, single side
Parent material group(s) and sub-group(s):	SA312 Tp 316L - Group N° 8 according to EN 15608:2005
Parent Material Thickness (mm):	2,11 mm - Range of approval: 1,5 to 4 mm
Weld Metal Thickness (mm):	2,11 mm - Range of approval: 1,5 to 4 mm
Throat Thickness (mm):	/
Single Run/Multi Run:	Multi Run
Outside Pipe Diameter (mm):	Øe 26,67 mm - Range of approval: 25 mm min. and above
Filler Material Designation:	EN 12072 S 25 22 2 N L (AWS A5.9 ER 310LMo)
Filler Material Make:	Sandvik "25.22.2LMN"
Filler Material Size:	Ø1,6 mm
Designation of Shielding Gas/Flux:	EN 439 Gr. I1 - Argon 99,9%
Designation of Backing Gas:	EN 439 Gr. I1 - Argon 99,9%
Type of Welding Current and Polarity:	DC-EN
Mode of Metal Transfer:	/
Heat Input:	0,39 to 0,56 KJ/mm
Welding Position:	PA - Flat
Preheat Temperature:	Min. 18 °C
Interpass Temperature:	Max. 120 °C
Post-Heating:	None
Post-Weld Heat Treatment and/or Ageing:	None

Other Information

(*) Additional standart: ISPESL Racc. S Rev. 05 Ed. 99 + AD 2000 Merkblatt HP 2/1 Ed. 03/2002

Certified that test welds were prepared, welded and tested satisfactorily in accordance with the requirements of the code/testing standard indicated above.

Location: Venice

Date of issue: 19 October 2006

Surveyor

D. Bilic for L. Mil & soli)
Surveyor to Lloyd's Register EMEA

A member of the Lloyd's Register Group

Examining Body

Lloyd's Register, its affiliates and subsidiaries and their respective officers, employees or agents are, individually and collectively, referred to in this clause as the 'Lloyd's Register Group'. The Lloyd's Register Group assumes no responsibility and shall not be liable to any person for any loss, damage or expense caused by reliance on the information or advice in this document or howsoever provided, unless that person has signed a contract with the relevant Lloyd's Register Group entity for the provision of this information or advice and in that case any responsibility or liability is exclusively on the terms and conditions set out in that contract.

Form 4102 (2006.04)

Certificate no: VEN 06002SB/3
Page 2 of 3

229

Details of Test Weld

Manufacturer's provisional Welding Procedure Specification Reference No.	2877/1	Examining Body: Reference No:	- / -
Manufacturer's Welding Procedure Qualification Record No.:	/		
Manufacturer:	ETTORE ZANON S.p.A.	Date of Welding:	23 agosto 2006
		Location:	Schio (VI)
Welder's Name:	Novella Pierpaolo (EZ46)	Method of Preparation and Cleaning:	Preparation by machining - Cleaning by brushing - Degreasing by acetone
Mode of Metal Transfer:	141 (GTAW)	Parent Material Specification: (attach material certificates)*	SA312 Tp 316L
Joint Type and Weld:	BW - Butt weld on tube, single side	Parent Material Thickness (mm):	2,11 mm
Test Piece/Welding Position:	PA	Outside Pipe Diameter (mm):	26,67 mm

Weld Preparation Detail - Sketch

Joint Design

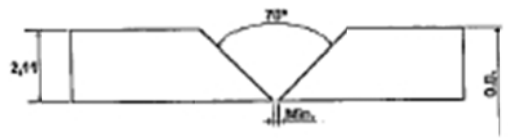

Welding Sequence

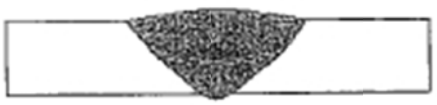

Welding Details

Run	Process	Size of Filler Metal	Current A	Voltage V	Type current Polarity	Wire Feed m/min	Travel Speed cm/min	Heat Input kJ/mm	Metal Transfer
1st	141	Only fusion	50÷80	13÷17	DC-EN	/	6÷10	0,4÷0,5	/
2nd	141	Ø1,6 mm	50÷110	13÷17	DC-EN	/	6÷12	0,4÷0,6	/

Filler Material:	EN 12072 S 25 22 2 N L (AWS A5.9 ER 310LMo)		
Type, Designation, Trade Name:	Sandvik "25.22.2LMN"		
Any special Baking or Drying:	None	Other information*:	None
Gas/flux: Shielding	99,9% Argon - EN 439 Gr. I1		
Gas/flux: Backing	99,9% Argon - EN 439 Gr. I1		
Gas Flow Rate: Shielding	8÷15 lt/min		
Gas Flow Rate: Backing	8÷15 lt/min	Post-Weld Heat Treatment and/or Ageing	None
Tungsten Electrode – Type/Size:	Ø2,4 mm (WT20 - EN 26848)	Time, Temperature, Method:	N.A.
Details of Back Gouging/Backing:	N.A.	Heating and Cooling Rates*:	N.A.
Preheat Temperature:	Min. 18 °C		
Interpass Temperature:	Max. 120 °C		
Post-Heating:	None		
Manufacturer's Name	ETTORE ZANON S.p.A.	Surveyor	
Manufacturer's Signature	J. Besoni		

(D. Bilic for L. Milli & self)
Surveyor to Lloyd's Register EMEA

A member of the Lloyd's Register Group

Date: 23 agosto 2006 Examining Body

* As required

Form 4102 (2006.04)

Certificate no: VEN 0600258/3
Page 3 of 3

225

Test Results

Manufacturer's Welding Procedure Qualification Record No.:	2858/1	Examining Body: Reference No:	- / -
Visual Examination:	Satisfactory	Radiography*:	Satisfactory - RX 168/06
Penetrant/Magnetic Particle Test*:	Satisfactory- LP 342/06	Ultrasonic Examination*:	Not required
		Temperature:	Room temperature
Colonidon Assessment**:	Not required		

Tensile tests*

Type/No	Re N/mm²	Rm N/mm²	A% on	Z%	Fracture Location	Remarks
Requirement	/	485	/	/		
Results	/	/	/	/		
TT1	/	591	/	/	Base metal	None
TT2	/	594	/	/	Base metal	None

Bend tests*

Type/No	Bend Angle	former Diameter	Elongation*	Result
Face bend 1	180°	2xThk.	N.A.	GOOD
Face bend 2	180°	2xThk.	N.A.	GOOD
Root bend 1	180°	2xThk.	N.A.	GOOD
Root bend 2	180°	2xThk.	N.A.	GOOD

Macroscopic Examination: Satisfactory to EN 1321 - N° 2 Sections cert. SM 51/06
Microscopic Examination: Satisfactory to EN 1321 - N° 1 Sections cert. EM 11/06

Impact Tests* Type: Not required Size: Requirement:

Notch Location/Direction	Temp °C	Values (J) 1	2	3	Average (J)	Remarks

Hardness Tests*
Type/Load: HV 10 - Satisfactory cert. DUR 45/06
Values - Parent Metal:
- H.A.Z.:
- Weld Metal:

Other Tests:
Chemical analysis of WM: Satisfactory cert. RTM N° Breda 2698-2006

Remarks
Ferrite delta check of WM: Satisfactory cert. FE 06/06
Magnetic permeability check: Satisfactory cert. PM 01/06

Location of Measurements (Sketch)* see attached

Tests carried out in accordance with the requirements of: EN 15614-1 + SPIRAL Spec SP2-SACM-CM-01 Ver. 2.8
Laboratory Report Reference No: ETTORE ZANON Laboratory N° 2297 + RTM N° Breda 2698-2006
Test Results were acceptable
Test carried out in the presence of: L. Milli

Surveyor
(D. Elic for L. Milli & self)
Surveyor to Lloyd's Register EMEA
A member of the Lloyd's Register Group

Examining Body

* As required
** 15614-5 only

Form 4102 (2006.04)

APPENDIX A.6 – DESY Certifications and Documents

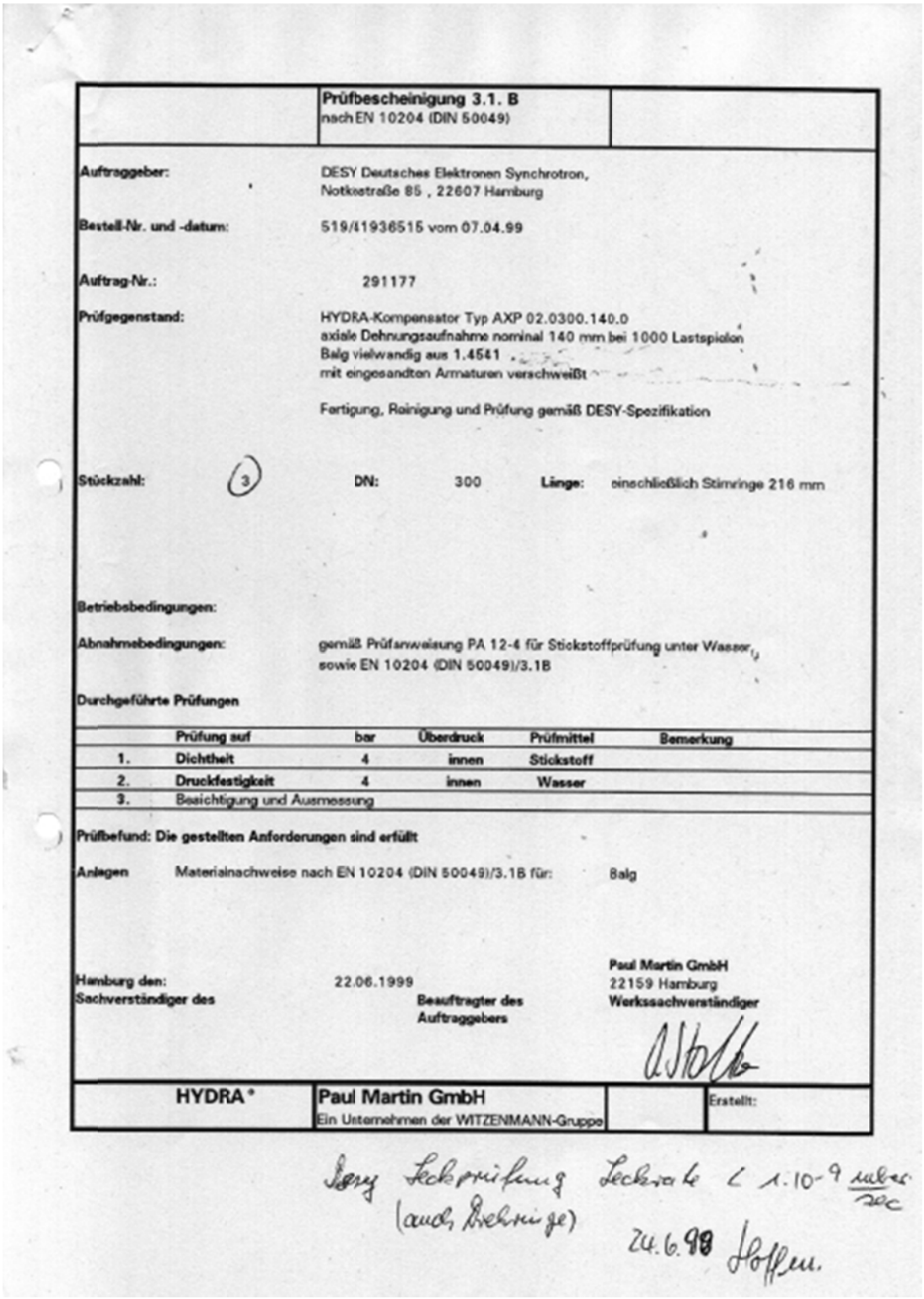

Prüfbescheinigung 3.1. B
nach EN 10204 (DIN 50049)

Auftraggeber: DESY Deutsches Elektronen Synchrotron, Notkestraße 85 , 22607 Hamburg

Bestell-Nr. und -datum: 519/41936515 vom 07.04.99

Auftrag-Nr.: 291177

Prüfgegenstand: HYDRA-Kompensator Typ AXP 02.0300.140.0
axiale Dehnungsaufnahme nominal 140 mm bei 1000 Lastspielen
Balg vielwandig aus 1.4541
mit eingesandten Armaturen verschweißt

Fertigung, Reinigung und Prüfung gemäß DESY-Spezifikation

Stückzahl: 3 **DN:** 300 **Länge:** einschließlich Stimringe 216 mm

Betriebsbedingungen:

Abnahmebedingungen: gemäß Prüfanweisung PA 12-4 für Stickstoffprüfung unter Wasser, sowie EN 10204 (DIN 50049)/3.1B

Durchgeführte Prüfungen

	Prüfung auf	bar	Überdruck	Prüfmittel	Bemerkung
1.	Dichtheit	4	innen	Stickstoff	
2.	Druckfestigkeit	4	innen	Wasser	
3.	Besichtigung und Ausmessung				

Prüfbefund: Die gestellten Anforderungen sind erfüllt

Anlagen Materialnachweise nach EN 10204 (DIN 50049)/3.1B für: Balg

Hamburg den: 22.06.1999

Sachverständiger des **Beauftragter des Auftraggebers**

Paul Martin GmbH
22159 Hamburg
Werkssachverständiger

HYDRA®	Paul Martin GmbH Ein Unternehmen der WITZENMANN-Gruppe		Erstellt:

Desy Leckprüfung Leckrate < 1.10-9 mbar/sec
(auch Drehringe)
24.6.98 Hoffm.

Pressure certificate for HGR Pipe Compensator, 519/41936515

99/042 -
99/055

Herstellerwerk: Manufacturer's works: Usine productrice:	ABNAHMEPRUEFZEUGNIS B INSPECTION CERTIFICATE B CERTIFICAT DE RECEPTION B BESCHEINIGUNG 3.1.B NACH EN 10204	Zeugnis-Nr.: Certificate No.: N° du certificat: 990323712 Datum Date: Date: 01.02.1999
KRUPP THYSSEN NIROSTA		

35667 Dillenburg Postf. 1751

WITZENMANN GMBH
POSTFACH 12 80
75112 PFORZHEIM
Deutschland

Balg

Bestellerin: Purchaser: Commettant: WITZENMANN GMBH

Bestell-Nr.: Order-No.: Commande N°: LIEFERANTENNR 000028201 AFR.KAERCHE

Unser Auftrag Nr.: Our Order No.: Notre commande: 843804

Lieferanzeige Nr.: Delivery Note No.: Avis d'expédition N°: 20050536

618522

Zeichen d. fachverständigen Inspector's stamp Poinçon de l'expert: QA

Erzeugnisform: Produkt: Band/Coil/Rouleau

Werkstoff: Qualität: Nuance: NIROSTA 4541 / 1.4541

Lieferbedingungen/Terms of delivery/Conditions de livraison:
DIN 17441 2/97 AD W2 9/98 AD W10 11/87
EN 10088-2 8/95
TRD 100 5/91
Witzenmann BV 50-001 Index2 WS50-1.4541 Index 1

Position Item Poste	Stückzahl Quantity Nombre	Gewicht/Masse Masse kg	Maße/Produkt dimensions/Dimensions du produit mm	Erschm.-Art Melt. form. Mode de fus	Schmelzen-Nr. Cast-No. Coulée N°	Los-/Band-Nr. Lot-/Coil-No. Lot-/Rouleau-N°	Ausführung Finish Fin
1	14	13282	0,30 x 1250,00	AOD	529840	76879	3D2R

Schmelzen-Nr. Cast-No. Coulée N°	C %	Si %	Mn %	P %	S %	Cr %	Mo %	Ni %	Al %	Ti %	N %	Co %
529840	0,039	0,45	1,08	0,023	0,001	17,28	0,27	9,05	0,004	0,36	0,01	0,15
	Cu %											
	0,21											

Probe Nummer Test No. Spr.N°	Los-/Band-Nr. Lot-/Coil-No. Lot-/Rouleau-N°	Rp0,2 N/mm²	Rp1% N/mm²	Rm N/mm²	A80 %	KO					
657 A	76879 01	252	280	629	63,9	9,0					
658 M	76879 01	258	283	637	62,4	9,0					

Probenlage zur Walzrichtung: KO Korngrösse nach ASTM E112

QUER

Vorwechslungsprüfung (Spektralanalyse)/Test of identity (spectrum analysis)/Contrôle d'identification (analyse spectrale) I.O.
Maße - Oberfläche/Dimensions - Surface/Dimensions - Surface I.O.
Prüfung auf interkrist. Korros./Test of intercryst. corros./Test de corros. interkrist. EN ISO 3651-2 8/98 O.B.

Krupp Thyssen Nirosta GmbH

DIESES ZEUGNIS WURDE
VOM RECHNER ERSTELLT
WERK DILLENBURG,
ABNAHME

FRIEDL

WERKSSACHVERSTAENDIGER
INSPECTOR / EXPERT
TEL: 02771-390315
FAX: 02771-390510

WAERMEBEHANDLUNG : 1050 GRAD C / LUFT
TRAITEMENT TERMIQUE : 1050 GRAD C / AIR
HEAT - TREATMENT : 1050 DEGREE / AIR

PM 291177 / DESY 519 / 41936515

Material certificate for compensator Bellows, 990323712

LEIPE-EDELSTAHL
CHR. HÖVER & SOHN GMBH & CO. KG

Edelstahlhammerwerk · Ringwalzwerk · Postfach 2120 · D-51784 Lindlar

Abnahmeprüfzeugnis 3.1B nach DIN 50049 / EN 10204

Inspection certificate 3.1B acc. to EN 10204 / Certificate de reception 3.1B selon EN 10204

Besteller/Purchaser/Commettant Acron Stahlvertriebsgesellschaft mbH Birkenweg 6 D- 21391 Reppenstedt	Erzeugnisform/Product/Produit Schmiedestücke
	Werkstoff/Quality/Nuance 1.4541
Bestell-Nr./Order No/Commande No. 4085 vom 16.03.99	Anforderungen/Requirements/Prescriptions de contrôle DIN 17440-96, AD-W2 und AD-W10
Hersteller/Manufacturer/Producteur CHR. HÖVER & SOHN	
Unsere Auftrags-Nr./Our Order No./Notre Commande No. 6763/153671	Lieferzustand/Condition of Delivery/Etat de Livraison lösungsgeglüht 1070°C 1h/Wasser
Herstellerzeichen / Trade mark / Sigle du producteur: VS Stempel d. Werkssachverständigen- / Inspector's stamp / Poinçon de l'expert: KR	

Pos. Item Poste	Anzahl Quantity Nombre	Gewicht Weight Masse kg	Abmessungen Dimensions Dimension mm	Schmelzen-Nr. Heat-No. No. de coulée	Los-Nr. Lot No. Lot No.	Probe-Nr. Test No. No. d'Essais
01	16		Ringe 347/250 x 80 st.	81625	I	843
02	8		Ringe 347/250 x 120 st.	81625	I	844

Analyse/Chemical Composition/Composition chimique

Schmelzen-Nr. Heat No. No. de coulée | Erschmelzungsart Steelmaking Process Procede d'Elaboration: E (V=VOD-Verfahren/VOD Process/VOD Procede O=Oxygenstahl/Oxygen Steel/Acier Foxygen; E=Elektrostahl/Electric steel/Acier Electrique A=AOD-Verfahren/AOD Process/AOD Procede)

	%C	%SI	%MN	%P	%S	%CR	%NI	%TI				
081625	,043	,42	1,51	,027	,016	17,45	10,36	,37				

	Prob-Lage Pos. of test Position	Pr.-Temp. T.-Temp. Temperature °C	ReH/Rp (N/mm²) 0,2%	ReH/Rp (N/mm²) 1%	Rm (N/mm²)	A5 (%)	Z (%)	Av (J)	Härte Hardness Durete
Vorschrift Requirement Specification →	T	20	200	235	500-730	35	-	60 ISO-V	
Probe-Nr. Test-No. No d'Essais ↓									
843	T	20	223	258	534	48	69	210/210/206	
844	T	20	229	261	548	51	72	194/200/204	

Besichtigung u. Maßkontrolle wurden durchgeführt. Surface and dimensions controlled. Inspection du matériel et contrôle des dimensions ont été effectués.	Material wurde 100% auf Verwechslung geprüft. 100% spectroscopic analysis. 100% analyse spectroscopique.	Interkristalline Korrosion (DIN 50914) Intergranular attack. Corrosion intercristalline.
ohne Beanstandung	ohne Beanstandung	ohne Beanstandung

Die gestellten Anforderungen sind erfüllt.
The requirements are fulfilled.
Les conditions imposées sont satisfaites.

Datum/dated/date 08.04.1999 av

(20) 51789 Lindlar

CHR. HÖVER & SOHN
GmbH & Co. KG
Objartel

Der Werkssachverständige / Works inspector / Contrôleur Usine

Material certificate for compensator End Rings, 50049/EN10204

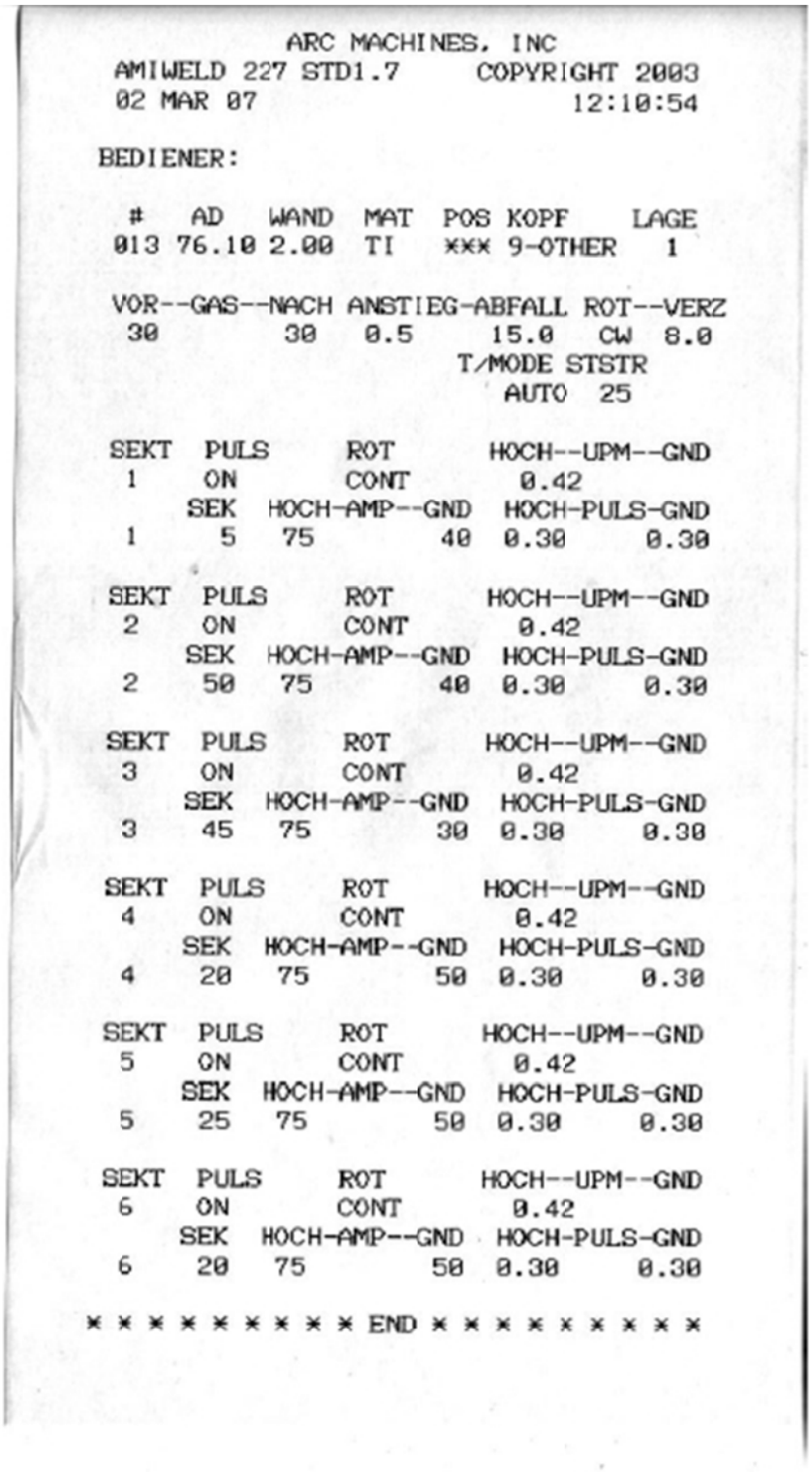

```
              ARC MACHINES, INC
 AMIWELD 227 STD1.7      COPYRIGHT 2003
 02 MAR 07                       12:10:54

BEDIENER:

  #    AD    WAND  MAT  POS KOPF     LAGE
 013 76.10 2.00  TI   *** 9-OTHER    1

 VOR--GAS--NACH ANSTIEG-ABFALL ROT--VERZ
  30        30   0.5     15.0   CW  8.0
                        T/MODE STSTR
                          AUTO  25

 SEKT  PULS      ROT       HOCH--UPM--GND
  1     ON       CONT        0.42
       SEK  HOCH-AMP--GND  HOCH-PULS-GND
  1     5   75          40  0.30      0.30

 SEKT  PULS      ROT       HOCH--UPM--GND
  2     ON       CONT        0.42
       SEK  HOCH-AMP--GND  HOCH-PULS-GND
  2     50  75          40  0.30      0.30

 SEKT  PULS      ROT       HOCH--UPM--GND
  3     ON       CONT        0.42
       SEK  HOCH-AMP--GND  HOCH-PULS-GND
  3     45  75          30  0.30      0.30

 SEKT  PULS      ROT       HOCH--UPM--GND
  4     ON       CONT        0.42
       SEK  HOCH-AMP--GND  HOCH-PULS-GND
  4     20  75          50  0.30      0.30

 SEKT  PULS      ROT       HOCH--UPM--GND
  5     ON       CONT        0.42
       SEK  HOCH-AMP--GND  HOCH-PULS-GND
  5     25  75          50  0.30      0.30

 SEKT  PULS      ROT       HOCH--UPM--GND
  6     ON       CONT        0.42
       SEK  HOCH-AMP--GND  HOCH-PULS-GND
  6     20  75          50  0.30      0.30

* * * * * * * * * END * * * * * * * * *
```

APPENDIX A.7 – US Vendor Certifications and Documents. (CM2 two phase pipe FNAL)

AMERIFLEX, INC.
2390 Railroad St.
Corona, CA 92880-5410
Phone (951) 737-5557 Fax (951) 737-3992

- CERTIFICATION OF TEST -

CUSTOMER NAME: FERMI NATIONAL ACCELERATOR LAB

PART NUMBER: 06.0-7200

DESCRIPTION: CM2 CRYOMODULE

AMERIFLEX JOB #: 178403

QUANTITY: 1

PURCHASE ORDER#: 585676

We hereby certify that all Helium Leak testing was performed with a Varian Mass Spectrometer Helium Leak Detector (Model #979).

The sensitivity of this Detector is to detect a leak to 5×10^{-11} cc/sec. of helium with an external pressure of one atmosphere. This unit utilizes a dry scroll pump.

No leakage in excess of 2×10^{-10} **of helium was indicated.**

07/21/09
Date

AMFX 1 TEST

Q.A. Form 105
certtest

2-Phase corrector pipe (D858455) leak test certificate

ULBRICH of CALIFORNIA, INC.

4/29/09
Shipment #: 172725

5455 E. HOME AVENUE
FRESNO, CA 93727
INSIDE CALIFORNIA 1-800-237-2888
OUTSIDE STATES 1-800-ULBRICH
1-559-456-2310
FAX - 559-456-2321

CERTIFICATION

AMERIFLEX INC
2390 RAILROAD STREET
CORONA, CA
92880

AMERIFLEX INC
2390 RAILROAD STREET
CORONA, CA
92880

ORDER#	ORD DATE	CUST#	LOC	SLSREP	P.O. NUMBER	SHIP VIA	COL/PPD
605902	4/27/09	B03683	4	240 / SAL	34699 34699AL	C W X	PPD NO ADD

RDERED WEIGHT	ITEM / DESCRIPTION	
50	CUSTOMER PART #: 02.3-7000	
	SPECIAL METALS	
	TI 40A	ANNEALED
	ORDERED GAUGE: .00600	ORDERED WIDTH: 12.00000
	GAUGE TOL: +.00030 / -.00030	WIDTH TOL: +.01500 / -.01500
	CONFORMS TO SPECIFICATION	
	AMS 4902 G	

CHEMICAL & PHYSICAL ANALYSIS:

HEAT#	SUFFIX	MILL SOURCE	CERTIFICATION DATE	WEIGHT CERTIFIED
GN0151	- 004	ULBRICH	4/29/09	49

CARBON	NITROGEN	TITANIUM	IRON	HYDROGEN	OXYGEN
.0060	.0100	99.7723	.1000	.0017	.1100

TENSILE	YIELD	ELONGATION%	SCALE	ROCKWELL
69,900	58,100	33		

GRAIN SIZE	HARDENABILITY	BEND TEST	EMBRITTLEMENT
9.0		Y	

PHYSICAL PROPERTIES AFTER HEAT:

TENSILE	YIELD	ELONGATION%	ROCKWELL
0	0	0	

ELEVATED TEMPERATURE PROPERTIES:

TENSILE	YIELD	ELONGATION%	ROCKWELL
0	0	0	

COMMENTS: THIS MATERIAL IS FREE FROM MERCURY CONTAMINATION
THIS MATERIAL CONFORMS TO DFARS REQUIREMENTS CLAUSE

*** Continued On The Next Page ***

07120-02

2

ULBRICH of CALIFORNIA, INC.

4/29/09
Shipment #: 172725

5455 E. HOME AVENUE
FRESNO, CA 93727
INSIDE CALIFORNIA 1-800-237-2888
OUTSIDE STATES 1-800-ULBRICH
1-559-456-2310
FAX - 559-456-2321

CERTIFICATION

AMERIFLEX INC
2390 RAILROAD STREET
CORONA, CA
92880

AMERIFLEX INC
2390 RAILROAD STREET
CORONA, CA
92880

ORDER#	ORD DATE	CUST#	LOC	SLSREP	P.O. NUMBER	SHIP VIA	COL/PPD
605902	4/27/09	B03683	4	240 / SAL	34699	C W X	PPD NO ADD

CHEMICAL & PHYSICAL ANALYSIS:

HEAT#	SUFFIX	MILL SOURCE	CERTIFICATION DATE	WEIGHT CERTIFIED
GN0151	- 004	ULBRICH	4/29/09	49

252.225-7014. MILL LOT 3S4850

SWORN AND SUBSCRIBED TO BEFORE ME
THIS DAY OF

NOTARY PUBLIC

ULBRICH OF CALIFORNIA, INC.

BY R. NOBLE

20-02140

2-Phase Ti Bellows Leak material certificate (2 pages)
(D858465 & D874615)

TICO TITANIUM, INC Certification of Tests

30150 S Wixom Rd • Wixom • MI • 48393-3340 • 248-446-0400 • 800-521-4392 • Fax 248-446-1995
519 Todd Dr • Oak Ridge North • TX • 77385-7332 • 281-355-6555 • 888-676-7575 • Fax 281-355-6676

TO: AMFLA
AMERIFLEX INC
2390 RAILROAD STREET
CORONA, CALIFORNIA 92880-5410

DATE: 5/12/2009
CUSTOMER PO: 34180
TICO SO: 366789

HEAT NUMBER: 0164140

SPECIFICATION: ASTM B-861/ASME SB-861 **** GR. 2 ****
EN 10204:2004 TYPE 3.1

DESCRIPTION: SMLS PIPE 1-1/4' S/10 X 12" LG 1 PC

COMMENTS:

CHEMISTRY %:

Fe	IRON	0.043
O	OXYGEN	0.176
N	NITROGEN	0.005
C	CARBON	0.005

RESIDUAL ELEMENTS (EACH) LESS THAN 0.10
RESIDUAL ELEMENTS (TOTAL) LESS THAN 0.40
FINAL PRODUCT HYDROGEN: .002
TITANIUM REMAINDER

TENSILE DATA:	TEST 1	TEST 2	TEST 3	TEST 4
TENSILE PSI:	73389			
YIELD 0.2% OFFSET:	54389			
ELONGATION % IN	25.4			
RA %:				

0164140-07

PRODUCT ANNEALED: 1202F, 20 MIN., A.C.

PHYSICAL/MECHANICAL TEST DATA:

HYDROSTATIC: PASS **ULTRASONIC:** **GUIDED BEND:**
FLATTENING: PASS **PNEUMATIC:**
FLARE: **EDDY CURRENT:**

MATERIAL FREE FROM MERCURY CONTAMINATION.
MATERIAL CONFORMS TO ALL TECHNICAL AND WORKMANSHIP REQUIREMENTS OF SPECIFICATIONS

PRINTED: 5/12/2009 3:21:37PM

Carie Westfal, Certification Clerk

2-Phase Ti corrector pipe (1-1/4-scd 10) test certificate

TICO TITANIUM, INC Certification of Tests

30150 S Wixom Rd • Wixom • MI • 48393-3340 • 248-446-0400 • 800-521-4392 • Fax 248-446-1995
519 Todd Dr • Oak Ridge North • TX • 77385-7332 • 281-355-6555 • 888-676-7575 • Fax 281-355-6676

TO: AMFLA
AMERIFLEX INC
2390 RAILROAD STREET
CORONA, CALIFORNIA 92880-5410

DATE: 5/12/2009
CUSTOMER PO: 34180
TICO SO: 366789

HEAT NUMBER: W30J

SPECIFICATION: ASTM B-861-06A/ASME SB-861 **** GR. 2 & 3 ****
EN 10204:2004 TYPE 3.1

DESCRIPTION: SEAMLESS PIPE 2-1/2" S/10 X 48" LG 1 PC

COMMENTS:

CHEMISTRY %:

Fe	IRON	0.1033
O	OXYGEN	0.1566
N	NITROGEN	0.0036
C	CARBON	0.0016
H	HYDROGEN	0.0003

RESIDUAL ELEMENTS (EACH) LESS THAN 0.10
RESIDUAL ELEMENTS (TOTAL) LESS THAN 0.40
FINAL PRODUCT HYDROGEN: .002
TITANIUM REMAINDER

TENSILE DATA:	TEST 1	TEST 2	TEST 3	TEST 4
TENSILE PSI:	81000			
YIELD 0.2% OFFSET:	60600			
ELONGATION % IN	30			
RA %:				

PRODUCT ANNEALED: YES

PHYSICAL/MECHANICAL TEST DATA:

HYDROSTATIC:	PASS	**ULTRASONIC:**	**GUIDED BEND:**
FLATTENING:	PASS	**PNEUMATIC:**	
FLARE:		**EDDY CURRENT:**	

04140-08

MATERIAL FREE FROM MERCURY CONTAMINATION.
MATERIAL CONFORMS TO ALL TECHNICAL AND WORKMANSHIP REQUIREMENTS OF SPECIFICATIONS

PRINTED: 5/12/2009 3:22:02PM

Carie Westfal, Certification Clerk

2-Phase Ti corrector pipe (2-1/2-scd 10) test certificate

09/11/2007 06:10 15625317137 DURKEE TESTING LAB PAGE 03/03

Durkee Testing Laboratories, Inc.

P.O. BOX 1401•15700 Texaco Street•Paramount, CA 90723 • (562) 531-7111 PAGE 1 OF 1 ENT BY CR

CUSTOMER	CUST P.O.	SHIPPER / W.O.	LAB NO.	LOG NO.
AMERIFLEX, INC. 2390 RAILROAD STREET CORONA, CA 92880	30391		R0946	192108A
	SPECS: AWS D-17.1:2001 CL. A AMS STD 1595A			DATE REC. 08/24/07 DATE COMP. 09/10/07

WELDER X WELDING OPERATOR ____.

WELDER QUALIFICATION TEST REPORT

WELDER'S NAME REYNALDO ESTRADA I.D. 4015.

JOINT WELDING PROCEDURE/EQUIPMENT BUTT WELD.

TEST WELD:
BASE METAL DESCRIPTION TITANIUM GROUP NO. VI.
WELDING PROCESS GTAW SINGLE WELD [X] DOUBLE WELD [ ]
CURRENT: AC [ ] DC [X] BACKING: YES [X] NO [ ]
VERTICAL: DOWN [ ] UP [ ] PENETRATION: COMPLETE [X] PARTIAL [ ]

	POSITION				DIMENSION, INCH	
SHEET GROOVE:	1G [X]	2G [ ]	3G [ ]	4G [ ]		TH. .028"
TUBE GROOVE:	1G [ ]	2G [ ]	5G [ ]	6G [ ]	O.D.	TH.
SHEET FILLET:	1F [ ]	2F [ ]	3F [ ]	4F [ ]		TH.
TUBE FILLET:	1F [ ]	2F [ ]	4F [ ]	5F [ ]	O.D.	TH.

PENETRANT INSP	**NA [ ]	PASS [X]	FAIL [ ]	
VISUAL:		PASS [X]	FAIL [ ]	
RADIOGRAPHIC:	**NA [ ]	PASS [X]	FAIL [ ]	**REF CEDTECH TESTING LABORATORIES
BEND:	NA [X]	PASS [ ]	FAIL [ ]	10708 SO. GARFIELD AVE - SO. GATE, CA 90280
METALLOGRAPHIC:	NA [X]	PASS [ ]	FAIL [ ]	CONTROL NO. 23117

WELD SPECIMEN, AS TESTED, IS [X] SATISFACTORY [ ] UNSATISFACTORY

QUALIFIED:
BASE METAL GROUP NO.: VI SINGLE WELD [X] DOUBLE WELD [X]
CURRENT: AC [ ] DC [X] BACKING: YES [X] NO [ ]
VERTICAL: DOWN [ ] UP [ ] PENETRATION: COMPLETE [X] PARTIAL [X]

					TH., INCH MIN.	TH., INCH MAX.	O.D INCH MIN.	O.D INCH MAX.
SHEET GROOVE:	1G [X]	2G [ ]	3G [ ]	4G [ ]	.018"	.112"		
TUBE GROOVE:	1G [X]	2G [ ]	5G [ ]	6G [ ]	.018"	.112"		
SHEET FILLET:	1F [ ]	2F [ ]	3F [ ]	4F [ ]				
TUBE FILLET:	1F [ ]	2F [ ]	4F [ ]	5F [ ]				

WITHIN THE LIMITS RECORDED, AND IN ACCORDANCE WITH THE REQUIREMENTS OF THE SPECIFICATION(S) LISTED, THE ABOVE NAMED INDIVIDUAL IS QUALIFIED TO PERFORM THE WELDING PROCESS NOTED.

Accreditation Nadcap Materials Testing Laboratory
Certification Number: 117922

Weldments, as tested, meet Specification requirements. All other information furnished by your company has been included herein for your convenience and is subject to verification by your company as to its accuracy, adequacy, and relevancy.

The recording of false, fictitious or fraudulent statements or entries on the test report may be punished as a felony under federal law.

RESPECTFULLY SUBMITTED,

DURKEE TESTING LABORATORIES, INC.

KENNETH R. JOHN
GENERAL MANAGER

dm/

09/25/2007 14:54 15625317137 DURKEE TESTING LAB PAGE 02/02

Durkee Testing Laboratories, Inc.

P.O. BOX 1401•15700 Texaco Street•Paramount, CA 90723 • (562) 531-7111 PAGE 1 OF 1

ENT BY: CR

AMERIFLEX, INC.
2390 RAILROAD STREET
CORONA, CA 92880

CUST P.O.	SHIPPER / W.O.	LAB NO.	LOG NO.
30498		R2725	193724A

SPECS: AMS STD 1595A

DATE REC.: 09/13/07
DATE COMP.: 09/25/07

WELDER X WELDING OPERATOR ____.

WELDER QUALIFICATION TEST REPORT

WELDER'S NAME YIM PHENGDALA I.D. 4005

JOINT WELDING PROCEDURE/EQUIPMENT BUTT

TEST WELD:
BASE METAL DESCRIPTION ER2 TITANIUM GROUP NO. VI
WELDING PROCESS PAW SINGLE WELD [X] DOUBLE WELD [ ]
CURRENT: AC [ ] DC [X] BACKING: YES [X] NO [ ]
VERTICAL: DOWN [ ] UP [ ] PENETRATION: COMPLETE [X] PARTIAL [ ]

	POSITION				DIMENSION, INCH	
SHEET GROOVE:	1G [X]	2G [ ]	3G [ ]	4G [ ]		TH. .032"
TUBE GROOVE:	1G [ ]	2G [ ]	5G [ ]	6G [ ]	O.D.	TH.
SHEET FILLET:	1F [ ]	2F [ ]	3F [ ]	4F [ ]		TH.
TUBE FILLET:	1F [ ]	2F [ ]	4F [ ]	5F [ ]	O.D.	TH.

VISUAL:		PASS [X]	FAIL [ ]
RADIOGRAPHIC: **	NA [ ]	PASS [X]	FAIL [ ]
BEND:	NA [X]	PASS [ ]	FAIL [ ]
METALLOGRAPHIC:	NA [X]	PASS [ ]	FAIL [ ]

**REF CEDTECH TESTING LABORATORIES
10708 SO. GARFIELD AVE - SO. GATE, CA 90280
CONTROL NO. 23401

WELD SPECIMEN, AS TESTED, IS [X] SATISFACTORY [ ] UNSATISFACTORY

QUALIFIED:
BASE METAL GROUP NO.: VI SINGLE WELD [X] DOUBLE WELD [X]
CURRENT: AC [ ] DC [X] BACKING: YES [X] NO [ ]
VERTICAL: DOWN [ ] UP [ ] PENETRATION: COMPLETE [X] PARTIAL [X]

					TH., INCH MIN.	TH., INCH MAX.	O.D INCH MIN.	O.D INCH MAX.
SHEET GROOVE:	1G [X]	2G [ ]	3G [ ]	4G [ ]	.008"	.048"	____	____
TUBE GROOVE:	1G [X]	2G [ ]	5G [ ]	6G [ ]	.008"	.048"	____	____
SHEET FILLET:	1F [ ]	2F [ ]	3F [ ]	4F [ ]	____	____	____	____
TUBE FILLET:	1F [ ]	2F [ ]	4F [ ]	5F [ ]	____	____	____	____

WITHIN THE LIMITS RECORDED, AND IN ACCORDANCE WITH THE REQUIREMENTS OF THE SPECIFICATION(S) LISTED, THE ABOVE NAMED INDIVIDUAL IS QUALIFIED TO PERFORM THE WELDING PROCESS NOTED.

RESPECTFULLY SUBMITTED,

DURKEE TESTING LABORATORIES, INC.

AL MENDOZA
METALLURGICAL SUPERVISOR

Weldments, as tested, meet Specification requirements. All other information furnished by your company has been included herein for your convenience and is subject to verification by your company as to its accuracy, adequacy, and relevancy.

The recording of false, fictitious or fraudulent statements or entries on this test report may be punished as a felony under federal law

dm/

2-Phase Ti corrector pipe welder certificate #2

Thermal-Vac TECHNOLOGY
1221 West Struck Avenue
Orange, CA 92867
(714) 997-2601 · FAX (714) 997-0234
www.thermal-vac.com

SHIPPER NUMBER 82279A

SOLD TO
AMERIFLEX, INC.
2390 RAILROAD ST.
CORONA CA 92880-5410

SHIP TO
AMERIFLEX, INC.
2390 RAILROAD STREET
CORONA, CA 92880-5410

AMERI

CUSTOMER P.O. NUMBER	CUSTOMER SHIPPER NUMBER	CUSTOMER JOB NUMBER	DATE RECEIVED	DATE SHIPPED
34417			07/07/09	07/10/09
CARRIER	**CONTAINERS**	**TERMS**	**BUYER**	
TVT		Net 30	KELLY	

#	QTY. ORDERED	PART NUMBER / REVISION / DESCRIPTION	QTY. SHIPPED	BALANCE DUE
EA	22	09.0-4281 B JOB#179078-2	22	0

MATERIAL : CP TI, GR 2

C E R T I F I C A T I O N S

STRESS RELIEVED CUSTOMER CLEANED PARTS IN A VACUUM FURNACE @ 1100 ± 25°F FOR 60 - 70 MINUTES AND FAN ARGON GAS COOLED TO BELOW 200°F. (REF. MIL-H-81200) NOTE: ALL TESTING TO BE ACCOMPLISHED BY CUSTOMER. PLASTIC BAGGED PER INSTRUCTIONS.

Any transportaton of customer materials to or from customer's location is offered only as convenience and, as such, is not charged for. Freight on board designation is Thermal-Vac Technology facility, Orange, CA. Any or all obligations and liabilities remain with the customer.

NO RETURNS AFTER 30 DAYS WITHOUT AUTHORIZATION. Received By: _____

We certify that the work described in this document was performed in accordance to purchase order requirements, except when noted, and within guidelines of the Thermal-Vac Technology Quality Control Manual. All pertinent documents verifying our process are on file and available for your inspection.

Thermal-Vac Technology, Inc.

BY _____ Quality Manager
AUTHORIZED SIGNITURE TITLE

2-Phase Ti corrector pipe weldment stress relieve certificate

AMERIFLEX, INC.

Precision formed bellows / welding & machining

- CERTIFICATION OF TEST -

CUSTOMER NAME: Fermi National Accelerator Lab

PART NUMBER: 06.0-7199

DESCRIPTION : 2.5" x .006" x 2.835" w Ti 6AL 2

AMERIFLEX JOB #: 179078

QUANTITY: 3

PURCHASE ORDER #: 586767

We hereby certify that all Helium Leak testing was performed with a Varian Mass Spectrometer Helium Leak Detector.

The sensitivity of this Detector is to detect a leak to 5×10^{-11} cc/sec. of helium with an external pressure of one atmosphere. This unit utilizes a dry scroll pump.

No leakage in excess of 1×10^{-9} of helium was indicated.

7/31/09
Date

Q.A. Form 105
certtest

2390 RAILROAD ST.. CORONA CALIFORNIA 92880 · (951) 737-5557 · FAX (951) 737-3992

2-

Phase Ti Bellows (D874615) leak test certificate

Attention Of: PURCHASING AGENT
To: UNITI TITANIUM
Address: EDGETOWNE COMMONS
1009 BEAVER GRADE ROAD
MOON TOWNSHIP, PA 15108

ATI Wah Chang
Allegheny Technologies
P.O. Box 460
Albany, Oregon 97321-0136
(541)928-4211 FAX (541) 967-6948

PRODUCT CERTIFICATION

IN REGARD TO YOUR
Purchase Order No.: 003849
Sales Order No.: 136092
Item No.: 002
Description: Ti Grade2 Pipe
Dimensions: 2.5" Sch10 x R/L
Specifications: ASTM B861-06a, ASME SB861, EN 10204 3.1 and Purchase Order
Date: December 13, 2007
Quantity: 11 pcs.
Weight: 417 lbs.
Heat No.: W30J
Batch No.: EXT-602884

THE TEST REPORT FOLLOWS:
Material Condition: Seamless and annealed

INGOT CHEMISTRY IN PERCENT

Element	Alpha Spec.	Spec. Max.	TOP	MIDDLE	BOTTOM
C		0.08	0.002	0.001	0.002
Fe		0.30	0.10	0.11	0.10
H		0.015	0.0004	<0.0003	<0.0003
N		0.03	0.003	0.004	0.004
O		0.25	0.15	0.15	0.17
OTHERS_EACH		0.1	<0.1	<0.1	<0.1
OTHERS_TOTAL		0.4	<0.4	<0.4	<0.4
Ti	BALANCE				

PRODUCT CHEMISTRY IN PERCENT

Element	Spec. Max.	RESULTS
H	0.015	0.002

Certified By: R Louie, QA Supervisor \es 12/13/07

"Wah Chang is A Registered/Certified ISO 9001:2000, AS 9100, and PED 97/23/EC Company."

04181-04

Purchase Order No.: 003849
Sales Order No.: 136092
Item No.: 002
Heat No.: W30J
Batch No.: EXT-602584

Doc. 243643 Var. 1 , APPROVED Page 2 of 2

ATI Wah Chang
Allegheny Technologies
P.O. Box 460
Albany, Oregon 97321-0136
(541) 926-4211 FAX (541) 967-6940

ROOM TEMPERATURE TENSILE TEST

Test	Method	Offset	Gage	Units	Spec. Min.	Spec. Max.	Long.
Tensile Strength:	ASTM E8			Ksi	50		81.0
Yield Strength:	ASTM E8	0.2%		Ksi	40	65	60.6
Elongation:	ASTM E8		2"	pct	20		30

ROOM TEMPERATURE TENSILES

Test	Method	Offset	Gage	Units	Spec. Min.	Spec. Max.	Long.
Tensile Strength:	ASTM E8			MPa	345		558
Yield Strength:	ASTM E8	0.2%		MPa	275	450	418
Elongation:	ASTM E8		50.8 mm	Pct	20		30

FLATTENING TEST

Test	Units	Results
Distance between platens:	inches	1.250
No. of Samples:		1
Results:		Acceptable

HYDROSTATIC TEST

Test	Units	Results
Test Pressure:	Psi	1727
Time:	seconds	5
Results:		Acceptable

04-18140

2-

Phase Ti Bellows collars (D 874615) material certification

Thermal-Vac TECHNOLOGY

1221 West Struck Avenue
Orange, CA 92867
(714) 997-2601 · FAX (714) 997-0234
www.thermal-vac.com

SHIPPER NUMBER: 82515A

SOLD TO
AMERIFLEX, INC.
2390 RAILROAD ST.
CORONA CA 92880-5410

SHIP TO
AMERIFLEX, INC.
2390 RAILROAD STREET
CORONA, CA 92880-5410

AMERI

CUSTOMER P.O. NUMBER	CUSTOMER SHIPPER NUMBER	CUSTOMER JOB NUMBER	DATE RECEIVED	DATE SHIPPED
34511			07/23/09	07/29/09
CARRIER	CONTAINERS	TERMS	BUYER	
TVT		Net 30	KELLY	

#	QTY. ORDERED	PART NUMBER / REVISION / DESCRIPTION	QTY. SHIPPED	BALANCE DUE
EA	5	09.0-4281 B JOB#179078-2 SUBMITTING PARTS PER CUSTOMER REQUEST. MATERIAL : TITANIUM C E R T I F I C A T I O N S STRESS RELIEVED CUSTOMER CLEANED PARTS IN A VACUUM FURNACE @ 1100 ± 25°F FOR 60 - 70 MINUTES AND FAN ARGON GAS COOLED TO BELOW 200°F. (REF. MIL-H-81200) NOTE: ALL TESTING TO BE ACCOMPLISHED BY CUSTOMER. PLASTIC BAGGED PER INSTRUCTIONS.	5	0

Any transportaton of customer materials to or from customer's location is offered only as convenience and, as such, is not charged for. Freight on board designation is Thermal-Vac Technology facility, Orange, CA. Any or all obligations and liabilities remain with the customer.

NO RETURNS AFTER 30 DAYS WITHOUT AUTHORIZATION. Received By: _____

We certify that the work described in this document was performed in accordance to purchase order requirements, except when noted, and within guidelines of the Thermal-Vac Technology Quality Control Manual. All pertinent documents verifying our process are on file and available for your inspection.

Thermal-Vac Technology, Inc.

BY [signature] Quality Manager
AUTHORIZED SIGNITURE TITLE

09210-03

2-Phase Ti bellows (D874615) stress relieve certificate

APPENDIX A.8 – FERMILAB Welding Documents (2-phase Ti pipe).

Prepared by Roger Hiller Fermilab 00362N++
Revised 6/17/2009

Welding Procedure Specifications (WPS)

Fermilab — *Fermi National Accelerator Laboratory*
Technical Division-Machine Shop

Welding Procedure Specification No.	*Fermi WPS Ti-3*	Date	*12/10/2008*
Revision # *2-add Tungsten requirements*	Date *1/22/2009*	Supporting PQR No.(s)	*Fermi PQR Ti-3*
Welding Processes	(1) *GTAW-Orbital*	**Type 1**	(Manual, Auto, Semi) *Automatic*
Welding Processes	(2)	**Type 2**	(Manual, Auto, Semi)

Joints (QW-402)					
Joint Design	*Square Butt Groove*			Backing	*Gas*
Backing Material (Type) Root	*Gas*			Remainder	
Retainer	Yes	No X	Type	Non-Metallic	Metallic(non-fusing)

Details:
3" ASTM B 861 Grade 2
0.078 Wall

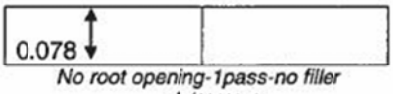

No root opening-1pass-no filler
Autogenous

Base Metals (QW -403					
P No. *51*	Group No.	TO	P No. *51*	Group No.	
Specification Type & Grade	*ASTM B 861,Grade 2*	TO	Specification Type & Grade	*ASTM B 861, Grade 2*	
OR/Chemical Analysis & Mechanical Properties					
TO: Chemical Analysis & Mechanical Properties					

Thickness Range	**Process 1**		**Process 2**	
Base Metal	Groove *0.078*	Fillet	Groove	Fillet
Deposited Weld Metal	Groove *0.078 to 0.156*	Fillet	Groove	Fillet
Pipe Diameter Range	Groove *2.875 Min.*	Fillet	Groove	Fillet
Other:				

Filler Metals (QW-404)	**Process 1**	**Process 2**
Specification No. (SFA)	*None-Autogenous*	
AWS No.		
F No.		
A No.		
Size of Filler Metals		
Deposited Weld Metal		
Thickness Range		
Electrode-Flux (Class)		
Consumable Insert		
Other		

Each Base Metal-Filler Metal combination should be recorded individually — Page 1

Prepared by Roger Hiller Fermilab 00362N**
Revised 6/17//2009

Fermilab Welding Procedure Specification – *Fermi Ti-3*

Positions (QW-405)			Postweld Heat Treatment (QW-407)	
Positions of Groove	*All*		Temperature Range	*None*
Welding Progression	Upward & Downward		Time Range	*N/A*
Positions of Fillet	*All*		Other	

Preheat (QW-408)		Gas (QW-408)			
Preheat Temp-Minimum	*32°F*	Closed Chamber Welding Head			
Interpass Temp Maximum	*350° F*		Gas'(s)	Mixture	Flow Rate
Preheat Maintenance	*N/A*	Shielding	*Argon*	*99.995>*	*30 CFH*
		Trailing	*None*		
		Backing	*Argon*	*99.995>*	*7 CHF*

Electrical Characteristic (QW-409)				
Current AC or DC	*Direct*	Polarity	*Straight*	Characteristics:
AMPS (Range)	*See Chart*	Volts (Range)	*10-15*	*Orbital with Pulse Current*
Tungsten Electrode Size & Type:		*1/16 EWCe-2*	*Mfg. Part # TC06-1085-03*	
Mode of Metal Transfer for GMAW:		*N/A*		
Electrode Wire Feed Speed Range:		*N/A*		

Technique (QW-410)	
String or Weave Bead	*Stringer*
Orifice or Gas Cup Size	*AMI Orbital Head Model 8-4000-Closed Chamber*
Initial/Interpass Cleaning (Brushing, Grinding, ect.)	*Initial cleaning with Acetone/Alcohol solvent*
Method of Back Gouging	*None*
Oscillation	*None*
Contact Tube to Work Distance	*N/A*
Multiple or Single Pass (per side)	*Single*
Multiple or Single Electrodes	*Single*
Travel Speed (Range)	*As Required*
Peening	*None*
Other	*AMI Orbital Welding Machine Model 227 with Model 8-4000 Welding Head Mfg. pre-ground/pre-shaped tungsten (TC06-1085-03)Required*

Sequence Chart

Weld Levels	Pulse	Rotation	RPM Primary IPM	RPM Back IPM	Time Sec.	AMPS Primary	AMPS Back	PULSE Primary Per sec	PULSE Back Per sec	Other
1	*ON*	*Continuous*	*0.42*	*---*	*5*	*91*	*50*	*0.30*	*0.30*	*Voltage preset by Manufacturer*
2	*ON*	*Continuous*	*0.42*	*---*	*50*	*91*	*50*	*0.30*	*0.30*	
3	*ON*	*Continuous*	*0.42*	*---*	*46*	*91*	*50*	*0.30*	*0.30*	*Manufacturer pre-ground/pre-shaped/pre-sized Tungsten(TC06-1085-03) set arc gap at .050"*
4	*ON*	*Continuous*	*0.42*	*---*	*21*	*90*	*50*	*0.30*	*0.30*	
5	*ON*	*Continuous*	*0.42*	*---*	*25*	*90*	*50*	*0.30*	*0.30*	
6	*ON*	*Continuous*	*0.42*	*---*	*30*	*91*	*50*	*0.30*	*0.30*	

Page 2

Revised 6/17/2009

Fermilab *Fermi National Accelerator Laboratory*
Technical Division-Machine Shop

Procedure Qualification Record *Revision: 2 Date: 6/17/09 Remarks: Added tungsten requirements*	**No.** ***Fermi PQR Ti-3***	Date	*12/10/2008*
Welding Process/Weld Type: *GTAW/Automatic*	Supporting:	***Fermi WPS Ti-3***	

Joints (QW-402)

Weld Type: *Single V Groove Weld*
Backing: *Open Butt, Gas Backing Only*
Root Opening: *0.0"*
Root Face: *0.078"*

Details:

0.078 Wall x 3" diameter
AMI Orbital Machine Model 227-STD1.9

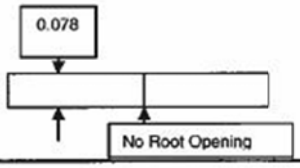

Base Metals (QW-403)
Material Spec., Type or Grade
SB-861, Grade 2 to *SB-861, Grade 2*
P-No. *51* to **P-No.** *51*
Thickness of Coupon (in.) *0.078 inches*
Diameter of Test Coupon (in.) *3 inches*

Post Weld Heat Treatment (QW-407)
Type: *No PWHT performed*
Temperature: *None*
Time: *None*

Filler Metals (QW-404) *None, Autogenous*
SFA Specification/ AWS Classification
Filler Metal F/ Analysis A-No
Size of Filler Metal (in.):
Weld Deposit "t"(in.):
Filler Metal Product Form:

Gas (QW-408) **Percent Composition**

	Gas	Mixture%	Flow Rate
Shielding:	*Argon*	*>99.995%*	*@ 30 CFH*
Trailing:		*None*	
Backing:	*Argon*	*>99.995%*	*@ 7 CFH*

Other: ***Closed chamber head with internal backing***

Positions (QW-405)
Position of Joint: *6G*
Weld progression: *Upward & Downward*

Preheat (QW-406)
Preheat Temperature: *Ambient 67° F*
Interpass Temperature: *350° F Maxium*

Electrical Characteristics (QW-409)
Current/Polarity: *DCEN Pulsed Current*
Amps/Volts: *See Chart/Volts 10-15*
Tungsten Type : *1/16 diameter, EWCe-2*

Travel (ipm): *As Required* **Oscillation:** *None*
String/Weave Bead: *Stringer*
Multiple/Single Pass (per side) *Multiple one side*
Multiple/Single Electrode: *Single Electrode*

Sequence Chart

Weld Levels	Pulse	Rotation	RPM Primary IPM	RPM Back IPM	Time Sec.	AMPS Primary	AMPS Back	PULSE Primary Per sec	PULSE Back Per sec
1	ON	Continuous	0.42	---	5	91	50	0.30	0.30
2	ON	Continuous	0.42	---	50	91	50	0.30	0.30
3	ON	Continuous	0.42	---	46	91	50	0.30	0.30
4	ON	Continuous	0.42	---	21	90	50	0.30	0.30
5	ON	Continuous	0.42	---	25	90	50	0.30	0.30
6	ON	Continuous	0.42	---	30	91	50	0.30	0.30

Other Requirements

Voltage preset by Mfg.
Mfg. pre-ground/pre-shaped and sized Tungsten required
Mfg. Part # TC06-1085-03

Arc gap set at .050 in.

Prepared by Roger Hiller

Revised 6/17/09
WPQR prepared by Roger Hiller, 00362N Fermilab

Fermilab ***Fermi National Accelerator Laboratory***
Technical Division-Machine Shop

Welder Performance Qualification Record

Date 12/23/2008

Revision: 2 Revision Date: 6/17/2009 Remarks: *Add range qualified*

In accordance with Fermi WPS Ti-3

Welders Name:	*Michael Reynolds*	**Fermi ID#** *03993N*	**Weld Stamp #** *9*
WPS Number:	*Fermi WPSTi-3*	**Test Coupon**	~~**Production Weld** *N/A*~~
Welding Process/Type:	*GTAW/Orbital/Automatic—AMI Orbital Machine Model 227-STD1.9*		
Type of Joint Welded:	*Pipe Groove Weld*	**Joint Types Qualified:**	*Groove and Fillet/Lap Weld*
Base Metals Welded:	*SB-861, Grade 2* to *SB-861, Grade 2*		

Welder Variables (QW-350)	Actual Variables Used	Range Qualified
AWS Classification:	*ERTi-2*	
Filler Metal Specification (SFA)		
Filler Metal F-No.		
Filler Metal Product Form		
Consumable Insert	*No Insert Used*	
P- or S- Number to P- or S- Number:	*P-No. 51*	
Base Metal Thickness (inches):	*0.078"*	
Pipe Diameter (inches):	*3"*	
Deposit Thickness (inches)	*0.197"*	
Welding Position/Progression	*5G*	
Backing Gas	*Argon Backing Gas Used*	
GTAW-Current/Polarity	*DCEN*	

Qualified to weld any Qualified Automatic GTAW WPS

Machine Welding Variables (QW-360)	Actual Variables	Range Qualified
Direct/Remote Visual Control	*N/A*	*N/A*
Automatic Voltage Control	*N/A*	*N/A*
Automatic Joint Tracking	*N/A*	*N/A*
Welding Position	*N/A*	*N/A*
Consumable Insert	*N/A*	*N/A*
Backing	*N/A*	*N/A*
Single/Multiple Pass Per Side	*N/A*	*N/A*

Fillet/Lap Welds: *All*

Guided Bend Test (QW-160)	*Face Bend #1-Acceptable* *Face Bend #2-Acceptable*	*Root Bend #1-Acceptable* *Root Bend #2-Acceptable*	*Test Number 1215-008/02*

Visual examination results: *Visual exam satisfactory per QW-302.4 and QW-194*

Radiographic test results: *N/A*

Mechanical tests conducted by: *Bodycote Testing Group*

Welding Test conducted by: *Fermi National Accelerator Laboratory* *Verification Number 12808-01RH*

We certify that the statements in this record are correct and that the test coupons were prepared, welded, and tested in accordance with the requirements of Section IX of the ASME Boiler and Pressure Vessel Code.

Fermi National Accelerator Laboratory Roger Hiller 00362N 6/17/09
Authorized Representative Date

Page 1 of 1

Prepared by Roger Hiller, Fermilab 00362N
6/17/2009

Welding Procedure Specifications (WPS)

Fermilab ***Fermi National Accelerator Laboratory***

Welding Procedure Specification No.		***Fermi Ti-4***		**Date**	*12/10/2008*
Revision # *3*	**Date**	*2/2/2009*	Supporting PQR No.(s)	***Fermi PQR Ti-4***	
Welding Processes	**(1)**	*GTAW-Orbital*	**Type 1**	(Manual, Auto, Semi)	*Automatic*
Welding Processes	**(2)**		**Type 2**	(Manual, Auto, Semi)	

Joints (QW-402)					
Joint Design	*Square Butt Groove*		Backing	*Gas*	
Backing Material (Type) Root	*Gas*		Remainder		
Retainer	Yes	No X	Type	Non-Metallic	Metallic(non-fusing)

Details:
1.5 ASTM B 861 Grade 2
0.109 Wall

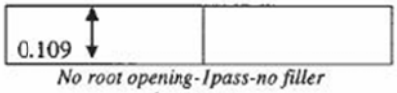

No root opening-1pass-no filler
Autogenous

Base Metals (QW -403					
P No. *51*	Group No.		TO	P No. *51*	Group No.
Specification Type & Grade	*ASTM B 861,Grade 2*		TO	Specification Type & Grade	*ASTM B 861, Grade 2*
OR/Chemical Analysis & Mechanical Properties					
TO: Chemical Analysis & Mechanical Properties					

Thickness Range	**Process 1**		**Process 2**	
Base Metal	Groove *0.109*	Fillet	Groove	Fillet
Deposited Weld Metal	Groove *0.109 -.218*	Fillet	Groove	Fillet
Pipe Diameter Range	Groove *1"Min.>*	Fillet	Groove	Fillet
Other:				

Filler Metals (QW-404)	**Process 1**	**Process 2**
Specification No. (SFA)	*None-Autogenous*	
AWS No.		
F No.		
A No.		
Size of Filler Metals		
Deposited Weld Metal		
Thickness Range		
Electrode-Flux (Class)		
Consumable Insert		
Other		

Each Base Metal-Filler Metal combination should be recorded individually

Page 1

Prepared by Roger Hiller, Fermilab 00362N
6/17/2009

Fermilab **Welding Procedure Specification – *Fermi Ti-4*** page 2

Positions (QW-405)		**Postweld Heat Treatment (QW-407)**	
Positions of Groove	*All*	Temperature Range	*None*
Welding Progression	*Upward & Downward*	Time Range	*N/A*
Positions of Fillet	*All*	Other	

Preheat (QW-408)		**Gas (QW-408)**			
Preheat Temp-Maximum	*32°F*	*Closed Chamber Welding Head*			
Interpass Temp Maximum	*350° F*		Gas'(s)	Mixture	Flow Rate
Preheat Maintenance	*N/A*	Shielding	*Argon*	*99.995>*	*30 CFH*
		Trailing	*None*		
		Backing	*Argon*	*99.995>*	*7 CHF*

Electrical Characteristic (QW-409)				
Current AC or DC	*Direct*	Polarity	*Straight*	Characteristics:
AMPS (Range)	*See Chart*	Volts (Range)	*See Chart*	*Orbital with Pulse*
Tungsten Electrode Size & Type:	*3/32 EWCe-2 Pre-ground/pre-shaped (TC09-1635-04)*			
Mode of Metal Transfer for GMAW:	*N/A*			
Electrode Wire Feed Speed Range:	*N/A*			

Technique (QW-410)	
String or Weave Bead	*Stringer*
Orifice or Gas Cup Size	*Closed Chamber AMI Orbital Head Model 8-4000*
Initial/Interpass Cleaning (Brushing, Grinding, ect.)	*Initial cleaning with solvent*
Method of Back Gouging	*None*
Oscillation	*None*
Contact Tube to Work Distance	*N/A*
Multiple or Single Pass (per side)	*Single*
Multiple or Single Electrodes	*Single*
Travel Speed (Range)	*As Required*
Peening	*None*
Other	*AMI Orbital Welding Machine Model 227 with Model 8-4000 Welding Head Mfg. pre-ground/pre-shaped tungsten (TC09-1635-04) required*

Sequence Chart 1.5 ASTM B 861 x .109 wall (sch. 10)

Weld Levels	Pulse	Rotation	RPM Primary IPM	RPM Back IPM	Time Sec	AMPS Primary	AMPS Back	PULSE Primary Per sec	PULSE Back Per sec	Other Requirements
1	*ON*	*Continuous*	*0.20*	*---*	*15*	*116*	*50*	*0.40*	*0.30*	*Voltage preset by Mfg. Mfg. pre-ground/pre-shaped and sized Tungsten required Mfg. Part # TC09-1635-04*
2	*ON*	*Continuous*	*0.30*	*---*	*62*	*115*	*50*	*0.40*	*0.30*	
3	*ON*	*Continuous*	*0.30*	*---*	*62*	*121*	*50*	*0.40*	*0.30*	
4	*ON*	*Continuous*	*0.30*	*---*	*33*	*119*	*50*	*0.40*	*0.30*	
5	*ON*	*Continuous*	*0.30*	*---*	*36*	*115*	*50*	*0.40*	*0.30*	*Arc gap set at .070 in.*
6	*ON*	*Continuous*	*0.30*	*---*	*46*	*113*	*50*	*0.40*	*0.30*	

Page 2

Revised 6/17/2009**
PQR Prepared by Roger Hiller, 00362, Fermilab

Fermilab *Fermi National Accelerator Laboratory*
Technical Division-Machine Shop

Procedure Qualification Record **No.** ***Fermi PQR Ti-4***	Date	*12/29/2008*

Revision: 1 Date: 1/08/09 Remarks: Revised to correct clerical errors
Revision: 2 Date: 2/4/09 Remarks: Revised Voltage and Test ID # to 1215-008/01
Revision 3 Date: 6/17/09 Remarks: Added tungsten requirements

Welding Process/Weld Type: *GTAW/Automatic* | Supporting WPS: ***Fermi WPS Ti-4***

Joints (QW-402)

Weld Type:	*Square Butt Groove Weld*
Backing:	*Gas Backing Only*
Root Opening:	*0.00 to 0.002 Maximum*
Root Face:	*Tube or Pipe Thickness*

Details:

1.5" diameter ASTM B861 Grade 2 Titanium
No filler (Autogenous) Single Pass with AMI Orbital Welding Machine 227

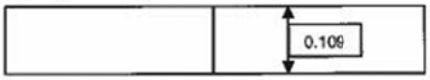

Base Metals (QW-403)
Material Spec., Type or Grade
ASTM B861, Grade 2 to ASTM B861, Grade 2
P-No. *51* to **P-No.** *51*
Thickness of Coupon (in.) *0.109 inches*
Diameter of Test Coupon (in.) *1.5 inches*

Post Weld Heat Treatment (QW-407)
Type: *No PWHT performed*
Temperature: *None*
Time: *None*

Filler Metals (QW-404) *None (Autogenous)*
SFA Specification:
AWS Classification:
Filler Metal F-No.:
Weld Metal Analysis A-No.:
Size of Filler Metal (in.):
Weld Deposit "t"(in.):

Gas (QW-408)

	Gas	Mixture%	Flow Rate
Shielding:	*Argon*	*>99.995%*	*@ 30 CFH*
Trailing:		*None*	
Backing:	*Argon*	*>99.995%*	*@ 10 to 30 CFH*

Other: *Closed Chamber welding head*

Positions (QW-405)
Position of Joint: *6G*
Weld progression: *Upward and Downward*

Preheat (QW-406)
Preheat Temperature: *Ambient 66° F*
Interpass Temperature: *350° F Maximum*

Electrical Characteristics (QW-409)
Current/Polarity: *DCEN (Straight)*
Tungsten Type & Size: *EWCe-2* *3/32 diameter*
Volts: **10-15**
Amps, Pulse: *See Sequence Chart*

Technique (QW-410)
Travel (ipm): *As Required* **Oscillation:** *None*
String/Weave Bead: *Stringer*
Multiple/Single Pass (per side) *Single*
Multiple/Single Electrode: *Single Electrode*

Sequence Chart *AMI Orbital Welding Machine Model 227 with Model 8-4000 Welding Head Closed Chamber*
Mfg. shaped & sized tungsten required

Weld Levels	Pulse	Rotation	RPM Primary IPM	RPM Back IPM	Time sec	AMPS Primary	AMPS Back	PULSE Primary Per sec	PULSE Back Per sec	Other Requirements
1	ON	Continuous	0.20	---	15	116	50	0.40	0.30	Voltage set by Mfg. Mfg. pre-ground/pre-shaped and sized tungsten required. Mfg. part # TC09-1635-04 Arc gap set at .070 in.
2	ON	Continuous	0.30	---	62	115	50	0.40	0.30	
3	ON	Continuous	0.30	---	62	121	50	0.40	0.30	
4	ON	Continuous	0.30	---	33	119	50	0.40	0.30	
5	ON	Continuous	0.30	---	36	115	50	0.40	0.30	
6	ON	Continuous	0.30	---	46	113	50	0.40	0.30	

Revised 6/22/09
WPQR prepared by Roger Hiller, 00362N Fermilab

Fermilab ***Fermi National Accelerator Laboratory***
Technical Division-Machine Shop

Welder Performance Qualification Record **No. *Fermi WPQR Ti-4*** Date *12/10/2008*

Revision: *2* **Revision Date:** *6/22/09* **Remarks:** *Changed title of document*

Welders Name: *Michael P.Reynolds* **Fermi ID#** *03993N* **Weld Stamp #** *9*
WPS Number: *Fermi WPS Ti-4* **Test Coupon** *PRN 112569* ~~**Production Weld**~~ *N/A*
Welding Process/Type: *GTAW/Orbital* **Type of Joint Welded:** *Pipe Groove Weld*
Joint Types Qualified: *Groove and Fillet Welds-Autogenous with AMI Orbital Machine Model 227-STD1.9*
Base Metals Welded: *SB-861, Grade 2 to SB-861, Grade 2*

Welder Variables (QW-350)	Actual Variables Used	Range Qualified
AWS Classification:	*ERTi-2*	*Qualified to weld Any Qualified Automatic GTAW WPS*
Filler Metal Specification (SFA)	*5.16*	
Filler Metal F-No.	*F-51*	
Filler Metal Product Form	*Bare(Solid)*	
Consumable Insert	*No Insert Used*	
P- or S- Number to P- or S- Number:	*P-No. 51 to P-No. 51*	
Base Metal Thickness (inches):	*0.109"*	
Pipe Diameter (inches):	*1.5"*	
Deposit Thickness (inches)	*0.109"*	
Welding Position/Progression	*5G*	
Backing Gas	*Argon Backing Gas Used*	
GTAW-Current/Polarity	*DCEN*	

Machine Welding Variables (QW-360)	Actual Variables	Range Qualified
Direct/Remote Visual Control	*N/A*	*N/A*
Automatic Voltage Control	*N/A*	*N/A*
Automatic Joint Tracking	*N/A*	*N/A*
Welding Position	*N/A*	*N/A*
Consumable Insert	*N/A*	*N/A*
Backing	*N/A*	*N/A*
Single/Multiple Pass Per Side	*N/A*	*N/A*

Fillet Welds: *As per AWS Limits*

Guided Bend Test (QW-160)		
	Face Bend #1-Acceptable	*Root Bend # 1-Acceptable*
	Face Bend #2-Acceptable	*Root Bend # 2-Acceptable*

Visual examination results: *Visual exam satisfactory per QW-302.4 and QW-194*

Radiographic test results: *None*

Mechanical tests conducted by: *Bodycote Testing Group* *Test Number 1215-008/01*

Welding of Test Coupon conducted by: *Fermi National Accelerator Laboratory* *Verification Number12808-02RH*

We certify that the statements in this record are correct and that the test coupons were prepared, welded, and tested in accordance with the requirements of Section IX of the ASME Boiler and Pressure Vessel Code.

Fermi National Accelerator Laboratory Roger G Hiller 00362N 6/24/09
Authorized Representative Date

Page 1 of 1

APPENDIX A.9 – FERMILAB Pressure Test for 2-Phase pipe-Cavity string (Blade tuners are not installed on the Cavity).

For CM2, we will conduct a pressure test of the two-phase circuit and Cavity string according pressure test procedure (see below).

Date: _____

Pressure Testing Permit*

Type of Test: [ ]Hydrostatic [X] Pneumatic

Test Pressure 34.5 Psid **Maximum Allowable Working Pressure** 29.7 Psid

Items to be Tested

Location of Test CAF-MP9 **Date and Time** _____

Hazards Involved
Contact with high velocity jet of the test gas.

Safety Precautions Taken
System designed, fabricated, and inspected per ASME Boiler & Vessels code. Test will be conducted by trained Personnel as described in ASME code. Access to test area will be limited only to those involved in the test during pressurization.

Special Conditions or Requirements
Operating pressure = 29.7 PSI, test pressure = 1.15*OP=34.5 PSI, pneumatic per ASME code.

1. First pressurize to 9.0 PSI and check for leaks.
2. Repeat at 17.0 PSI.
3. Increase pressure gradually to the test pressure for 5 minutes.
4. Reduce pressure to the design pressure.
5. Close valve on regulator.
6. Maintain test for the least 10 minutes without loss of pressure.

Qualified Person and Test Coordinator Dept/Date Tug Arkan TD/SRF DEV 10/5/11

Division/Section Safety Officer Dept/Date Richard Ruthe TD ES&H 10/3/11

Results

Pressure remained at 30 psig for 10 minutes without dropping.

Witness Richard Ruthe (Safety Officer or Designee) **Dept/Date** TD ES&H 10/5/11

- Must be signed by division/section safety officer prior to conducting test. It is the responsibility of the test coordinator to obtain signatures.

Test Procedure

The table bellow shows the pressure levels for each pause and what should be done at that pressure. Total time for the test, not including setup and tear-down time, will about 20 minutes.

Pressure (psig) (psig equals differential pressure for this test)	Dwell time (minutes)	Activity at pressure
0	--	
9.0	As needed	Snoop line fitting
17.0	As needed	Snoop line fitting
20.5	~1	
24.0	As needed	
27.0	~1	
31.0	As needed	
34.5	5	Peak test pressure of 1.15 x MAWP
30.0	10*	Test pressure hold point
25.0	As needed	
17.0	As needed	Visual inspection
0	--	

*The pressure hold point of 30 psig is approximately the MAWP. Dwell time in set long enough to assure us that pressure is not dropping.

TEST SETUP

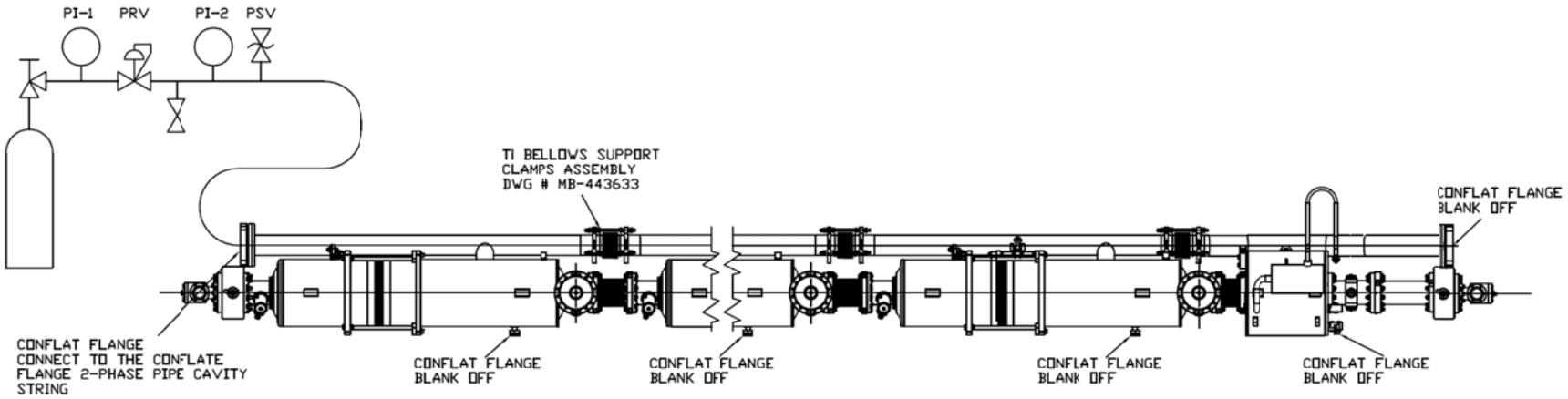

Test Pressure	PI-2	PSV
34.5 psig	0-100 psig	35.4 psig relief

For safe operation of the CM2 vacuum vessel, operating procedures are not required.

References

1. ES&H Manual Chapter 5033, Fermilab.
2. ASME Boiler & Pressure Vessel Code 2007.
3. ASME B31.3-2004.
4. 2007 Section II, Part D (CUSTOMARY)
5. Machinery's Handbook, 24th Edition
6. T. Peterson, "3.9-GHz Helium Vessel, Low Temperature Maximum Allowable Working Pressure", Rev. A, 10 April 2009.
7. R.P. Walsh, R.P. Mitchell, V.T. Toplosky, R.C. Gentzlinger "Low Temperature Tensile and Fracture Toughness Properties of SCRF Cavity Structural Materials". Proceedings of 9th Workshop on RF Superconductivity, Santa Fe, Nov. 1999.
8. K. Muguki, A. Takemura, Y. Morimoto, "Low Temperature Mechanical Properties of Titanium and Weld Joints (Ti/Ti, Ti/Nb) for Helium Vessels", Proceedings of 10th Workshop on RF Superconductivity (SRF 2001).
9. J.E. Campbell, Batelle- Columbus Laboratory "Handbook on Materials for Superconducting Machinery", 1976