NOTES (UNLESS OTHERWISE SPECIFIED):

1. FIELD WELDS TO BE SMOOTH FOR COSMETIC APPEARANCE.
2. SEALING SURFACES ON FLANGES MUST BE FREE FROM ANY NICKS AND RADIAL SCRATCHES.
3. ASSEMBLY MUST BE FREE FROM DIRT, GREASE, OIL AND CHIPS AND PROPERLY PACKAGED TO AVOID DAMAGE DURING SHIPPING.
4. ALL WELDS MUST BE CONTAMINANT FREE. WELD JOINT MUST BE CLEANED PROPERLY TO REMOVE MILL SCALE, DIRT, DUST, GREASE OIL, MOISTURE AND OXIDATION.
5. ALL CLEANING AND WELDING PROCEDURES WILL CONFORM TO THE AMERICAN WELDING SOCIETY SPECIFICATION: AWS G2.4M: 2007, "GUIDE FOR THE FUSION WELDING OF TITANIUM AND TITANIUM ALLOYS."
6. FIELD WELD MUST BE PERFORMED WITH AN ARGON PURGED ROTARY WELDER. A CONTINUOUS ARGON FLOW IS REQUIRED INSIDE THE TUBE TO GET THE OXYGEN COUNT OF 30 PPM OR LESS. WELD MUST BE FREE OF ALL TITANIUM OXIDATION AND DISCOLORATION.
7. WRITTEN PROCEDURE DESCRIBING THE CLEANING & WELDING PROCEDURE MUST BE SUPPLIED TO FERMILAB FOR APPROVAL PRIOR TO ANY PRODUCT WELDING.
8. WELDER MUST BE QUALIFIED IN TITANIUM WELDING. VERIFICATION DOCUMENTS AS WELL AS SAMPLE WELDS MUST BE SUPPLIED TO FERMILAB PRIOR TO ANY PRODUCT WELDING.
9. ALL WELDS TO BE VACUUM TIGHT. NO LEAK SHALL BE DETECTABLE ON THE MOST SENSITIVE SCALE OF A HELIUM LEAK DETECTOR WITH A MINIMUM SENSITIVITY OF 2×10^{-9} ATM. CC/SEC.

REVISION HISTORY
CAD MAINTAINED. CHANGES SHALL BE INCORPORATED BY THE DESIGN ACTIVITY.

ZONE	REV	DESCRIPTION	DATE	APPROVED
	A	INITIAL RELEASE - ERF ILC-000008		

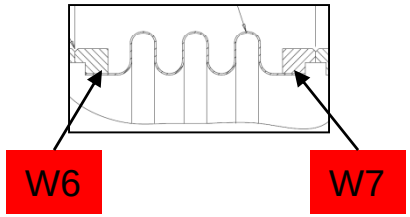

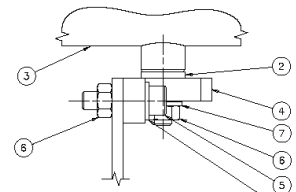

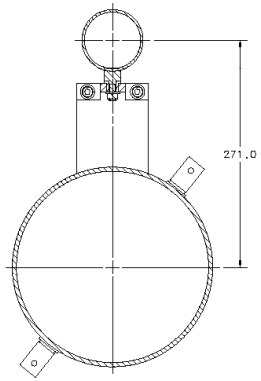

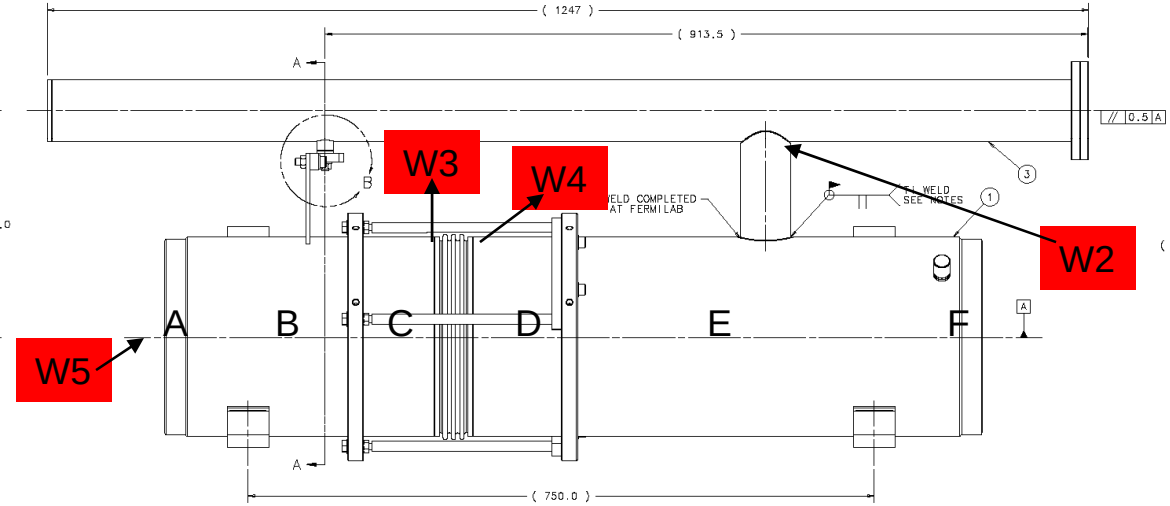

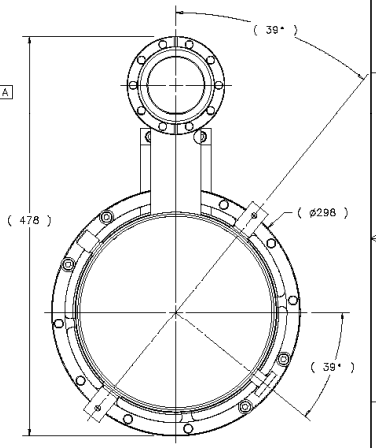

ITEM	P.I.N.	DESCRIPTION	QTY
7	COML	FLAT WASHER FOR M8 SCREW 304 STAINLESS STEEL	3
6	COML	M8 X 1.25 HEX NUT SILICON BRONZE	3
5	COML	M8 X 1.25 X 30 LG. HEX HEAD SCREW - 304 STAINLESS STEEL	2
4	B13175	SUPPORT PLATE ADAPTER	1
3	B13155	2-PHASE PIPE ASSEMBLY	1
2	B13045	PIPE BUSHING	1
1	B12815	G3 HELIUM VESSEL WELDMENT	1

PARTS LIST

NEXT ASSY	USED ON
-	-
APPLICATION	

FINISH: N/A

MATERIAL: SEE PARTS LIST

UNLESS OTHERWISE SPECIFIED:
DIMENSIONS ARE IN MILLIMETERS
INTERPRET DIM PER ASME Y14.5M-1994
BREAK ALL SHARP EDGES 0.5 MAX.
ALL MACH. SURFACES 3.2 MAX.

TOLERANCES: .X ± 2, .XX ± 0.8, .XXX ± 0.13, ANGLE ± 1°

THIRD ANGLE PROJECTION

DRAWN BY C. GRIMM	DATE 15DEC08	
CHECKED BY D. MITCHELL	DATE 14JAN09	
ENGINEERED BY D. MITCHELL	DATE 14JAN09	
DATABASE DESY EDMS	TEAM/GROUP T4CM DESIGN	
CAD I-DEAS	SOLID MODEL NO. D00000000623013	

FERMI NATIONAL ACCELERATOR LABORATORY
UNITED STATES DEPARTMENT OF ENERGY
P.O. BOX 500, BATAVIA, IL 60510-0500

TITLE: ILC CRYOMODULE HELIUM VESSEL G3_He_VESSEL_ASSEMBLY

SIZE	CAGE CODE	DWG NO.	REV
A1	0U5R6	D00000000812765	A

SCALE 3:8 | DO NOT SCALE DRAWING | SHEET 1 OF 1

Created: 07:11:06 on 14-01-09 (D-M-Y) By: grimm State: 1-INITIAL