Pressure Vessel Engineering Note For the 1.3-GHz Helium Vessel, Dressed Cavity IND-0164 (RI-018)

Author: R. Patel	Date: 10 December 2010

Revision History

Revision	Date	Section No.	Revision Description
	12/10/2010	All	Initial Release
	11/4/2011	Amendment 1	Added New Muon Lab Relief System Calculations

Table of Contents

Section	Page Number
Pressure vessel engineering note form (FESHM 5031)	**3**
Amendment 1 – NML Relief System	**4**
Appendix A – Extended Engineering Note	
Introduction	**7**
Exceptional vessel discussion	**7**
Description and Identification	**12**
Drawing Tree	*13*
Blade Tuner Description	*19*
Design Verification	**22**
Introduction and Summary	*22*
Non Code Elements	*23*
Geometry	*24*
Material Properties	*34*
Loadings	*37*
Stress Analysis Approach	*38*
Division 1 Calculations by Rule	*40*
Finite Element Model	*44*
Stress Analysis Results	*46*
System Venting Verification	**62**
Summary	*62*
Venting System Description	*63*
Detailed Calculations for System Venting	*69*
Welding Information	**75**
Anomolous Welds	*79*
Fabrication Information	**81**
Appendix B – Verification of ANSYS Results	**82**
Appendix C – Fatigue Analysis of the Titanium Bellows	**86**
Appendix D – Pressure Test Results	**91**
Appendix E – Supplemental Information Regarding the Titanium Vessel Longitudinal Weld	**94**
References	**100**

FESHM 5031.6 DRESSED SRF CAVITY ENGINEERING NOTE FORM

Prepared by: Ronak Patel Preparation Date: 10 December 2010

SRF Cavity Title: 1.3 GHz Helium Vessel, Dressed SRF Cavity RI-018

Lab Location / Cryomodule ID: Tested @ Meson Detector Building (FIMS #408)

Purpose of system / System description: Liquid helium containment for nine-cell 1.3-GHz Superconducting Radio Frequency (SRF) cavity

Pressure Vessel ID Number: IND-164

Design Pressure: 2.0 – bar @ 300° K, 4.0 – bar @ 2° K Design Temperature: -457° - 100° F

Materials: Niobium, Titanium, Niobium-Titanium

Drawing Numbers (PID's, weldments, etc.): D00000000872825

Designer/Manufacturer: FNAL/ Hi-Tech, AES, Sciaky

Test Pressure: 34.5 psi Test Date: 12/8/2010

Statements of Compliance

SRF Cavity conforms to FESHM 5031.6 and ***is not exceptional***: Yes / No

Reviewer's Signature: Date: 12/21/10
Print name: Kurt J Kleempner

D/S Head's Signature: Date: 3 Jan 2010
Print name: DAVID J. HARDING

Additional approvals if vessel is exceptional

ES&H Director's Signature: Date: 12/27/10
Print name: NANCY L GROSSMAN

Director's Signature: Date: 12/29/10
Print name: Stuart D. Henderson

Amendment 1

Reviewer's Signature: Date: 12/13/11
Print name: Kurt Kleempner

D/S Head's Signature: Apollinari Giorgio Date: 12/28/11
Print name: Giorgio Apollinari

Amendment 1

Mayling Wong
17 November 2011

Update on the Dual MAWP

The design pressures and design temperatures for the dipole corrector is:

Design Pressure 1: 2.0 bar Design Temperature 1: 80 – 300 K

Design Pressure 2: 4.0 bar Design Temperature 2: 1.8 – 80 K

Updates on the System Venting Verification for NML

This vessel has been selected to be part of Cryomodule 2, which will be tested at New Muon Lab (NML). This amendment shows the required relief capacities for the cryomodule as an assembly of eight dressed cavities and one corrector dipole. The AD/Cryo document titled "New Muon Lab Cryomodule, Feed Cap, and End Cap Relief Valve System Analysis" (located online http://ilctanmlcryo.fnal.gov/) lists the most up-to-date calculations on the available relief capacities at NML. As mentioned in the original pressure vessel engineering note, there are two safety relief valves for venting helium from CM1 and are considered in the system venting calculations. Both are rupture disks, as detailed below (see Tables 1, 2, and 3 in the AD/Cryo document):

- SV-803-H: Set pt. = 43 psig (4-bar), Leser Model 4414.4722, nominal size = 6"x8", 8053-SCFM air (16,175-g/sec)
- SV-806-H: Set pt. = 15 psig (2-bar), Leser Model 4414.7942, nominal size = 2"x3", 951-SCFM air (217-g/sec)

Drawing 5520.000-ME-458097 shows the schematic of CM2 at NML which the relief valves.

Table AM-1 summarizes the possible sources of helium pressure and the calculated required flow rate for the cryomodule.

Table AM-1 – Summary of Required Relief Capacities for CM2

Source of Helium Pressure	Required relief capacity (SCFM air)
Fire condition	1864
Loss of beam vacuum	6061
Loss of insulating vacuum	3737

Fire Condition

The required volumetric flow rate for fire condition in vessel is calculated following the CGA S-1.3-2005, Paragraph 6.3.3:

$$Q_{a-fire} = 0.3FG_i UA^{0.82}$$

Where:

F	correction factor for cryogenic systems	1	
G_i	gas factor for insulated containers for LHe at 2K	43.4	
k_{shield}	mean thermal conductivity of helium gas at between saturation temp and 1200 deg F at 1-bar (Table 3 of S-1.3)	0.122	Btu/hr-ft-F
t_{total}	assume helium gas thickness of 1-inch	1	in
		0.083	ft
U	overall heat transfer coefficient of the insulating material of CM2	1.464	Btu/hr-ft^2-F
A	Total surface area of insulating material of CM2	267.6	ft^2
Q_{a_fire}	Volumetric flow rate of relief device for fire conditions	1863.9	SCFM air

According to Paragraph 6.3, a factor of 0.3 can be used for a vessel that holds "nonflammable gas and is suitably isolated from possible engulfment in a fire." This is applicable for the cryomodule at NML which holds supercritical helium and sits within a cave structure that is isolated from flammable sources.

Loss of beam vacuum and insulating vacuum

For both the loss of beam vacuum and loss of insulating vacuum, the required flow rate is calculated for helium at 110% of the cold MAWP of 4-bar. For each scenario, the total surface area of the helium-to-vacuum boundary includes the surface areas of all eight dressed cavities plus the corrector dipole. The equation to calculate the mass flow rate is

$$\dot{m} = \frac{AQ}{\theta}$$

And the equivalent volumetric flow rate is

$$Q_a = \frac{13.1WC_a}{60C}\sqrt{\frac{ZTM_a}{MZ_aT_a}}$$

Where:

		Beam Vacuum Loss	Loss of Insulating Vacuum	
Q	Heat flux	4.0	2.0	W/cm^2
P_relief	110% of set pressure of cold MAWP	4.4	4.4	bar
		440	440	kPa
T	temperature when specific heat input	6.8	6.8	K
	is at a minimum for relief pressure	12.24	12.24	R
θ	specific heat input for helium at T, P_relief	23	23	J/g
A	Surface area of helium-to-vacuum boundary	6.8	8.4	m^2
m_dot	mass flow rate of helium during vaporization	11803.5	7278.2	g/sec
W	mass flow rate of helium during vaporization	93484.6	57643.7	lbm/hr
C	helium gas constant	378	378	
M	molecular weight of helium	4	4	kg/kmol
ρ	helium density at T, P_relief	53.39	53.39	kg/m^3
Z	compressibility factor for helium at flow condition	0.58	0.58	
C_a	air gas constant	356	356	
Z_a	air at Ta	1	1	
T_a	air at room temperature	520	520	R
M_a	air molecular weight	28.97	28.97	kg/kmol
Q_a	volumetric flow rate of helium during vaporization	6060.6	3737.1	SCFM air

For the loss of beam vacuum, the total helium-to-vacuum surface area of 6.8-m^2 includes the surface area of eight cavities (0.84-m^2 for each cavity) plus the surface area at the dipole corrector (0.067m^2). For the loss of insulating vacuum, the total surface area of 8.9-m^2 includes the area of the eight helium vessels (1.0-m^2), the area of the dipole corrector (0.37-m^2).

Appendix A
Extended Engineering Note for Exceptional Vessel

Introduction

The 1.3-GHz "dressed cavity" is a niobium superconducting radio frequency (SRF) cavity surrounded by a titanium vessel. The vessel contains liquid helium which surrounds the SRF cavity. During operation of the Dressed SRF Cavity, the liquid helium is at a temperature as low as 1.8°K.

The design of the Generation 3 (G3) Helium Vessel RF Cavity Assembly has been modified from the TESLA TTF design for more efficient fabrication. The design is the result of collaboration between FNAL and INFN.

The Dressed SRF Cavity RI-018 will be fully tested in the Horizontal Test System (HTS) at the Meson Detector Building. At the time of writing the original version of this engineering note, the final location of RI-018 after it has been tested in HTS has not been determined.

This pressure vessel engineering note describes the design and fabrication of the RI-018 1.3-GHz Dressed SRF Cavity. This document also summarizes how RI-018, as a helium vessel, follows the requirements of the FESHM Chapter 5031.6 for Dressed SRF Cavities [(1)]. Note that the original version of the note will contain venting calculations for the Dressed SRF Cavity when it is installed in HTS. An amendment will be added to the note once the final operating location of RI-018 is determined. This document and supporting documents for the RI-018 helium vessel engineering note may be found online at:

http://ilc-dms.fnal.gov/Workgroups/CryomoduleDocumentation/RI-018 /

Exceptional Vessel Discussion

Reasons for Exception

Dressed SRF Cavities, as defined in FESHM Chapter 5031.6, are designed and fabricated following the ASME Boiler and Pressure Vessel Code (the Code) [(2)]. The 1.3-GHz Dressed SRF Cavity as a helium pressure vessel has materials and complex geometry that are not conducive to complete design and fabrication following the Code. However, we show that the vessel is safe in accordance with FESHM 5031.6. Since the vessel design and fabrication methods cannot exactly follow the guidelines given by the Code, the vessel requires a Director's Exception. Table 1a lists the specific areas of exception to the Code, where in the note this is addressed, and how the vessel is shown to be safe. Table 1b goes into details of why the design or the fabrication method cannot follow Code guidelines.

Analysis and use of the ASME Code

The extended engineering note presents the results of the analysis that was performed on the entire vessel.

Table 1a – Areas of Exception to the Code - Safety

Item or Procedure	Reference	Explanation for Exception	How the Vessel is Safe
Some category A (longitudinal) & B (circumferential) welds in the titanium sub-assembly are Type 3 butt welds (welded from one side with no backing strip).	Pg. 21, 26, 38	Category A & B joints in titanium must be either Type 1 butt welds (welded from both sides) or Type 2 butt welds (welded from one side with backing strip) only (see the Code, Div. 1, UNF-19(a)).	The evaluation of these welds is based on a de-rating of the allowable stress by a factor of 0.6, the factor given in Div. 1, Table UW-12 for a Type 3 weld when not radiographed.
No liquid penetrant testing was performed on the titanium sub-assembly.	Pg. 21, 26	All joints in titanium vessels must be examined by the liquid penetrant method (see the Code, Div. 1, UNF-58(b)).	The evaluation of all welds is based on a de-rating of the allowable stress by a factor given in Div. 1, Table UW-12 for welds not radiographed. For the corner joints, the joint efficiency has to be less than 1.00.
No electron beam welds were ultrasonically examined in their entire length	Pg. 21, 26	All electron beam welds in any material are required to be ultrasonically examined along their entire length (see the Code, UW-11(e)).	The evaluation of all welds is based on a de-rating of the allowable stress by a factor given in Div. 1, Table UW-12 for welds not radiographed.
Fabrication procedure for the niobium cavity assembly does not include WPS, PQR, or WPQ	Pg. 72, 74	The fabrication procedure for the niobium cavity is proprietary. Detailed information on the procedure is not available.	The RF performance of the niobium cavity is acceptable, showing indirectly that all welds in the cavity are full penetration

Item or Procedure	Reference	Explanation for Exception	How the Vessel is Safe
No liquid penetrant testing was performed on the welds of the bellows sub-assembly.	Pg. 43, 77	All welds in the bellows expansion joint shall be examined by liquid penetrant testing (see the Code, para. 26-11)	The evaluation of the longitudinal weld is based on a de-rating of the allowable stress by a factor given in Div. 1, Table UW-12 for welds not radiographed. The circumferential attachment welds between the bellows and the weld ends are radiographed.
Weld at the 2-phase helium pipe stub attachment to the vessel	Pg. 76, 77	Not a Code-approved design (Fig. UW-16.1)	Examination of the weld shows that it is greater in size than the minimum required thickness.
System venting verification	Pgs. 6, 60-72	The Code does not recognize relief valves set for pressures below 15 psig	The cavity will be operated installed in the Horizontal Test System at MDB. The venting system for the HTS has been analyzed for all worst case venting conditions for a single 1.3GHz Dressed SRF Cavity and has been shown to be safe.
Longitudinal seam weld of the titanium vessel did not pass radiography inspection	App. E	All titanium welds require radiography inspection (see the Code, UNF-57(b))	Non-conformance due to "incomplete fusion" at the weld root---primarily because of joint edge mismatches at the rolled tube inside diameter. Visual inspection shows that weld integrity is not affected. The evaluation of all welds is based on a de-rating of the allowable stress by a factor given in Div. 1, Table UW-12 for welds not radiographed.

Table 1b – Areas of Exception to the Code – Design and Manufacturing Issues

Item or Procedure	Reason
Some category A (longitudinal) & B (circumferential) welds in the titanium sub-assembly are Type 3 butt welds (welded from one side with no backing strip).	Use of the Type 3 butt weld was driven by the design requirement for maximal space between the niobium cavity equator and the helium vessel inside diameter, as well as being historically rooted in the helium vessel design in use at DESY for the last 15 years.
No liquid penetrant testing was performed on the titanium sub-assembly.	Any acceptable pores within the weld will hold the liquid penetrant. Temperature changes in the weld, and thus the liquid penetrant, may result in degradation in the weld integrity.
No electron beam welds were ultrasonically examined in their entire length	The geometry of the parts being welded makes it significantly difficult to set up for the ultrasound procedure.
Fabrication procedure for the niobium cavity assembly does not include WPS, PQR, or WPQ	The fabrication procedure is proprietary information.
No liquid penetrant testing was performed on the bellows sub-assembly.	Any acceptable pores within the weld will hold the liquid penetrant. Temperature changes in the weld, and thus the liquid penetrant, may result in degradation in the weld integrity.
Weld at the 2-phase helium pipe stub attachment to the vessel	Mistakenly believed it was a Code weld design.
System venting verification	Pressure relief devices do not fall under Code guidelines for set pressure below 15-psig.
Longitudinal seam weld of the titanium vessel did not pass radiography inspection	See Appendix E for explanation of historical reasons.

Analytical Tools

Analysis was done using ANSYS Workbench 11 and Mathcad version 14.

Fabrication

The x-ray results of the welds for the RI-018 helium vessel are located online:

http://ilc-dms.fnal.gov/Workgroups/CryomoduleDocumentation/RI-018 /

All other fabrication documents for RI-018 are the same as the fabrication documents for previous helium vessels such as ACC-013. The weld documents such as the available Weld Procedure Specifications (WPS), Procedure Qualification Record (PQR), and Welder Performance Qualification (WPQ) are stored online at:

http://ilc-dms.fnal.gov/Workgroups/CryomoduleDocumentation/ACC013/weld-docs/

Other fabrication documents such as electronic copies of material certifications are located online at:

http://ilc-dms.fnal.gov/Workgroups/CryomoduleDocumentation/ACC013/other-fab-docs/

The historic sequence of decisions that were made regarding the inspection of the seam weld is explained in Appendix E.

Hazard Analysis

When tested in the HTS, the 1.3-GHz helium vessel is completely contained with a multilayered structure that protects personnel. The 5°K copper thermal shield completely surrounds the helium vessel. The 80°K copper thermal shield, in turn, completely surrounds the 5°K. The outer vacuum vessel of the HTS encases the 80°K thermal shield. From a personnel safety standpoint, the helium vessel is well contained within the both the test cryostat and the cryomodule. For the HTS, vacuum safety reliefs vent any helium spill. The vacuum vessel relief analysis for the HTS is documented in its vacuum vessel engineering note [3].

Pressure Test

The helium vessel [will be] pressure tested to 2.38-bar, which is greater than 1.16 times the warm MAWP of 2.05-bar.

Description and Identification

RI-018 is a Dressed SRF Cavity that is called a G3 Helium Vessel RF Cavity Assembly. It is pressure vessel number IND-0164. The top assembly drawing of the assembly, drawing 872825, is shown in Figures 2 and 3. The G3 Helium Vessel RF Cavity Assembly consists essentially of two sub-assemblies: the niobium SRF (bare) cavity and the titanium helium vessel.

The niobium SRF cavity is an elliptical nine-cell assembly. A drawing of the nine-cell cavity is shown in Figure 4 (drawing 4904.010-MD-440004). A single cell, or a dumbbell, consists of two half-cells that are welded together at the equator of the cell. Rings between the cells stiffen the assembly to a point. Some flexibility in the length of the nine-cell cavity is required to tune the cavity and optimize its resonance frequency. The end units each consist of a half cell, an end disk flange, and a transition flange. The transition flange is made of a titanium-niobium alloy. The iris' minimum inner diameter is 35-mm (1.4-in), and the maximum diameter of a dumbbell is 211.1-mm (8.3-in) (see drawing 4904.010-MD-439173). The length of the cavity, flange-to-flange, is 1247.4-mm (49.1-in.) (see drawing 4904.010-MD-440004). Refer to the section titled "Drawing Tree" for the location of the drawings not shown in this note.

The titanium helium vessel encases the niobium SRF bare cavity. Figure 5 shows the drawing of the titanium vessel assembly (drawing 812765). The vessel has a helium fill port at the bottom. Close to the top of the vessel is the two-phase helium return line. At the sides of the vessel are tabs which support the vessel within the HTS cryostat. The vessel is flexible in length due to a bellows at the middle of its length. This flexibility in the vessel allows for accommodating the change in the nine-cell cavity length due to thermal contraction at cryogenic temperature and to turning the niobium cavity during operation. A slim blade tuner supports the vessel around the bellows. Two control systems act on the blade tuner to change the length of the vessel, and thus change the length of the cavity. A slow-control tuner system that consists of a stepper motor that changes the vessel length. The stepper motor extends the length of the cavity (and the helium

vessel) by less than 2.0-mm (0.079-in.) to bring it to the desired resonance frequency to counteract the combined effects of thermal contraction and pressurization during cooldown. Once the cavity is at cryogenic temperature, the slow tuner system is shut-off. A fast-control tuner system consisting of two piezoelectric actuators prevents detuning of the cavity during operation due to Lorentz Forces and noise sources (microphonics) [(4)]. The piezos provide an increase in bellows length (bellows expansion) of 13-μm during operation.[(19)] The vessel is expected to have a lifetime of 10-years. The minimum inner diameter of the cylindrical part of the vessel (both the tubes and bellows) is 230-mm (9.1-in.). Refer to the tubes drawings 812995 and 813005 and bellows drawing 844575.

The design of the niobium nine-cell cavity is the same as the cavities used in the TESLA facility at DESY (Hamburg, Germany), which has been in operation for the past 10 years. The design of the helium vessel is a modification of the TESLA design. The location of the titanium bellows, along with the blade tuner and control systems, is a modification of the TESLA design that is the result of collaboration between Fermilab and INFN.

The Dressed SRF Cavity will be performance tested in HTS. The results will determine whether or not it will be used in a future cryomodule. The results of the testing will also be feedback in optimizing the design and fabrication process for future G3 dressed cavities which will be used in a cryomodule.

The Dressed SRF Cavity has two internal maximum allowable working pressures (MAWP). At room temperature, the (warm) internal MAWP is 2.0-bar. The vessel will be pressure tested in room temperature. The internal MAWP for cold temperatures (2°K) is 4.0-bar. The external MAWP is 1.0-bar.

Drawing Tree

A drawing tree for the G3 Helium Vessel RF Cavity Assembly is shown in Table 2. All drawings are located online. Note that the drawings for RI-018 are the same as the drawings for previous helium vessels. The drawings can be found at

http://ilc-dms.fnal.gov/Workgroups/CryomoduleDocumentation/ACC013/drawings/

There are three separate files that are located online: the top assembly drawing, 872825 – G3 Helium Vessel RF Cavity Assembly; the G3 Helium Vessel Assembly, drawing 812765, and its sub-assembly and component drawings; and the RF Cavity Assembly, drawing 440004, and its sub-assembly and component drawings.

Serial Number of Cells

As previously discussed, the niobium SRF bare cavity is comprised of nine cells, or 18 half cells. The serial numbers of these half cells are as follows:

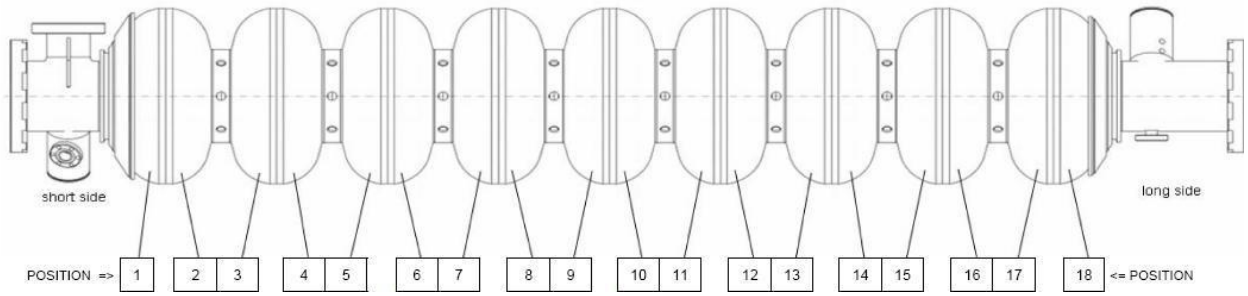

Half Cell	Serial #	Half Cell	Serial #
Position 1	FE256	Position 10	FE398
Position 2	FE443	Position 11	FE279
Position 3	FE365	Position 12	FE321
Position 4	FE211	Position 13	FE238
Position 5	FE434	Position 14	FE379
Position 6	FE261	Position 15	FE208
Position 7	FE260	Position 16	FE371
Position 8	FE252	Position 17	FE221
Position 9	FE456	Position 18	FE202

Processing History

The processing history of RI-018 includes 800C HT + final EP + 120 C bake for 48 hours. This EP was not normal, therefore another 30 microns were removed by light-EP. The detailed history including heat treatments and other processing can be found in the following device service document:

http://vector.fnal.gov/OPs/V46/1738/896697.doc

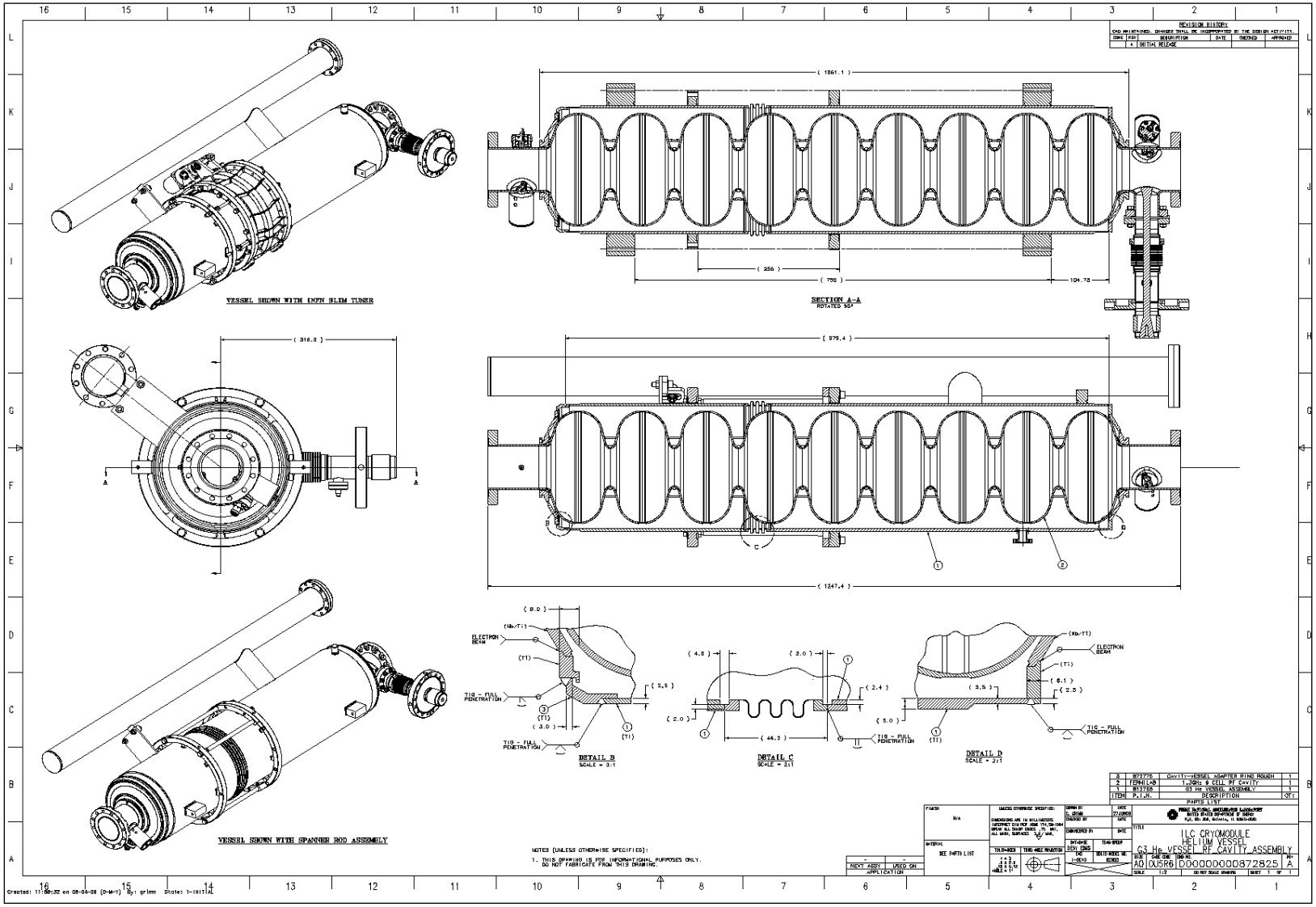

Figure 2. G3 Helium Vessel RF Cavity Assembly (Drawing 872825 – Sheet 1)

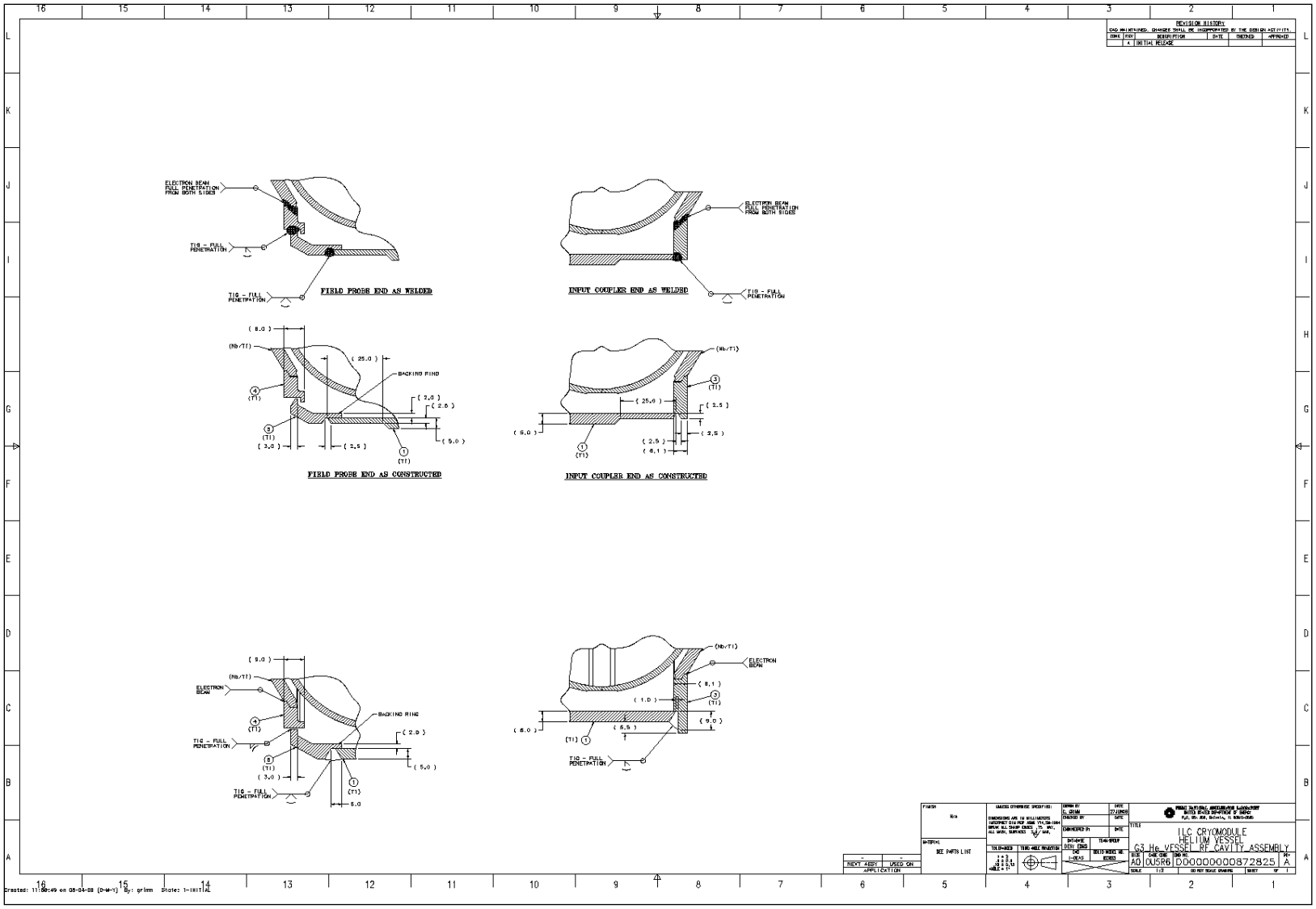

Figure 3. G3 Helium Vessel RF Cavity Assembly (Drawing 872825 – Sheet 2)

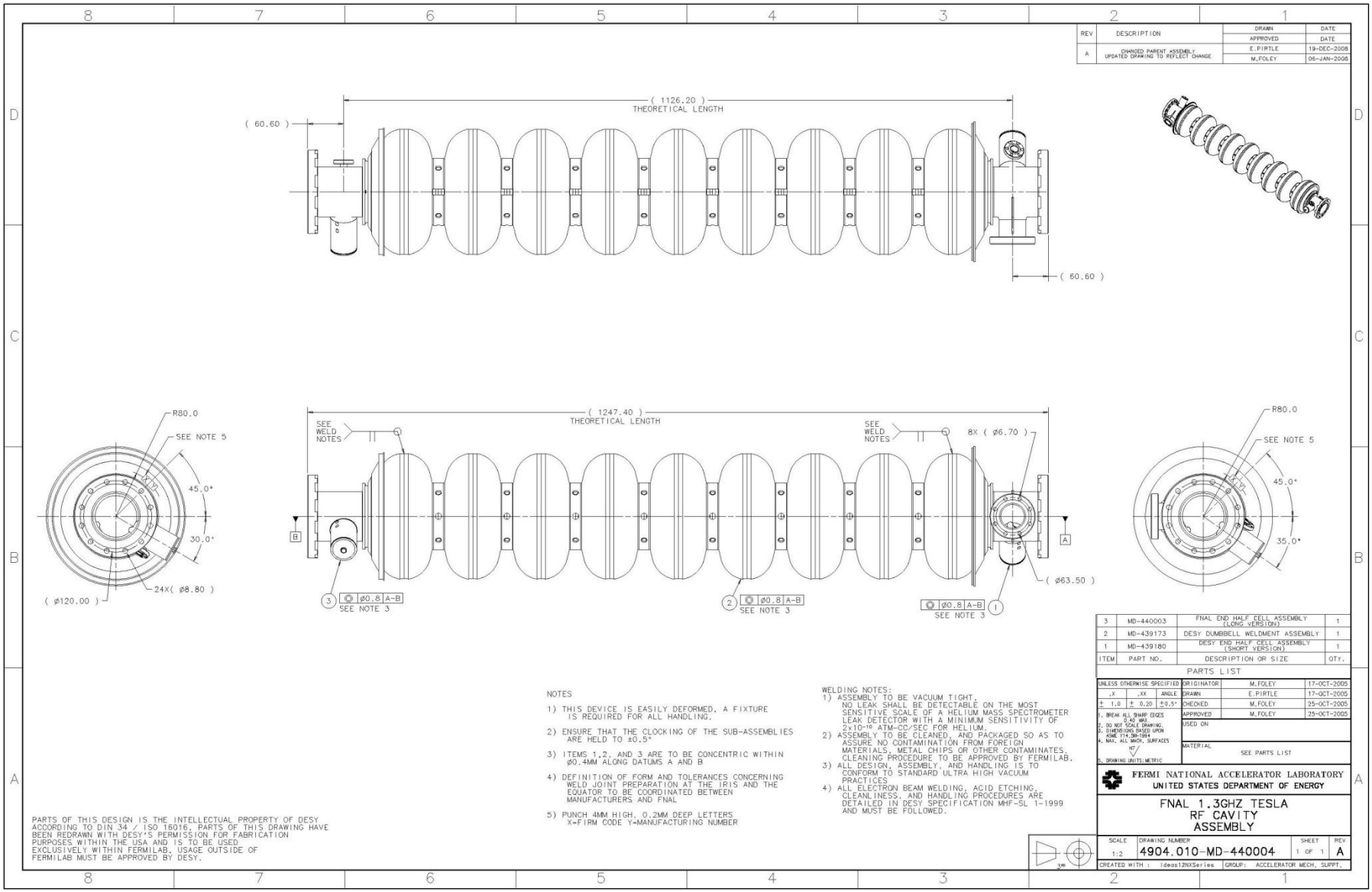

Figure 4. 1.3-GHz Nine Cell RF Cavity Assembly (4904.010-MD-440004)

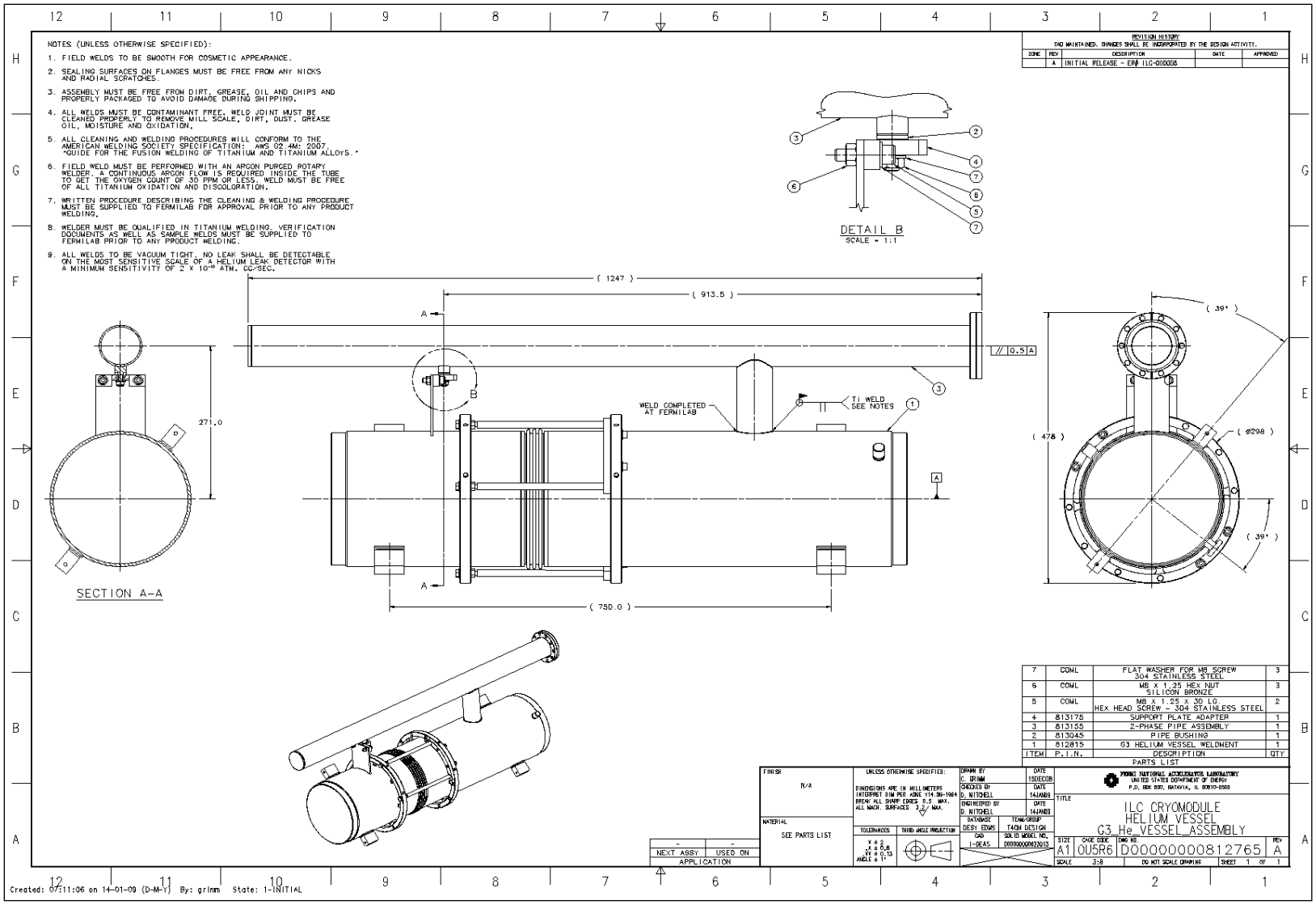

Figure 5. G3 Helium Vessel Assembly (Drawing 812765)

Table 2 – Drawing Tree for the G3 Helium Vessel RF Cavity Assembly

Drawing No.	Rev.	Title
872825	A	G3 He Vessel RF Cavity Assembly
812765	A	G3 He Vessel Assembly
812815	A	G3 Helium Vessel Weldment
844675	A	Tuner Ring Piezo End
844685	A	Tuner Ring Coupler End
812995	A	Tube Fld Probe End
813005	A	Tube MC End
844575	A	(COML) He Vessel Bellows Assmbly G3
813065	A	Invar Rod Clamping Pin
813165	A	Roller Pad Wide
813205	A	CF Flange Custom Knife Edge
844695	A	Vessel Support Bracket
844705	A	Spanner Rod
813035	A	Pipe Support Plate
813045	A	Pipe Bushing
813155	A	2-Phase Pipe Assembly
813075	A	Pipe Cap
813085	A	2-Phase Pipe
813055	A	Sliding Pipe Pin
863685	A	2-Phase Helium Supply Pipe
791535	A	Flange CF Knife Edge Body
813175	A	Support Plate Adapter
440004	A	RF Cavity Assembly
449180	D	Short End Half Cell Assembly
439178	B	End Disk Weldment - Short Version
439164	A	End Tube Spool Piece
439152	B	End Cap Flange
439168	--	End Cap Disk (Short Version)
439163	--	RF Half Cell (Short Version)
439177	A	End Tube Weldment - Short Version
439175	--	Short Version HOM Assembly
439166	--	Short Version HOM Formteil Housing
439150	--	HOM Spool Piece
439162	--	Short Version Formteil
439161	B	Short Version End Tube
439171	--	Coupler Spool Piece
439169	--	Coupler Rib
439159	--	NW78 Beam Flange
439158	--	NW40 Coupler Flange
439157	--	NW12 HOM Flange
813185	A	Cavity Transition Ring MC End
439173	-	DESY Dumbbell Weldment
439172	--	Dumbbell
439156	--	Mid Half Cell
439151	A	Half Support Ring
440003	-	FNAL End Half Cell Assembly
439178	B	End Disk Weldment (Long Version)
439164	A	End Tube Spool Piece
439152	B	End Cap Flange
439167	--	End Cap Disk (Long Version)
439155	--	RF Half Cell (Long Version)
440002	B	FNAL End Tube Weldment (Long Version)
439174	--	DESY Long Version HOM Assembly
439165	--	HOM Long Version Formteil Housing
439150	--	HOM Spool Piece
439154	--	Long Version Formteil
440001	--	FNAL Long Version End Tube
439170	A	DESY Antenna Spool Piece
439159	--	DESY NW78 Beam Flange
439160	--	DESY NW8 Antenna Flange
439157	--	DESY NW12 HOM Flange
813195	A	Cavity Transition Ring Field Probe End
872775	A	Cavity-Vessel Adapter Ring Rough

Blade Tuner Description

While not an integral part of the pressure vessel design, the blade tuner's function is affected by the performance of the pressure vessel. Figure 2 (drawing 872825) shows the "slim" blade tuner around the titanium bellows on the helium vessel. The blade tuner maintains the tuning of the RF cavity after cooldown of the vessel and during operation of the RF cavity. The design that is used on RI-018 is version 3.9.4.[18]

Figure 6 shows the different parts of the blade tuner assembly. The tuner rings (part numbers 844675 and 844685) are welded to the titanium helium vessel.

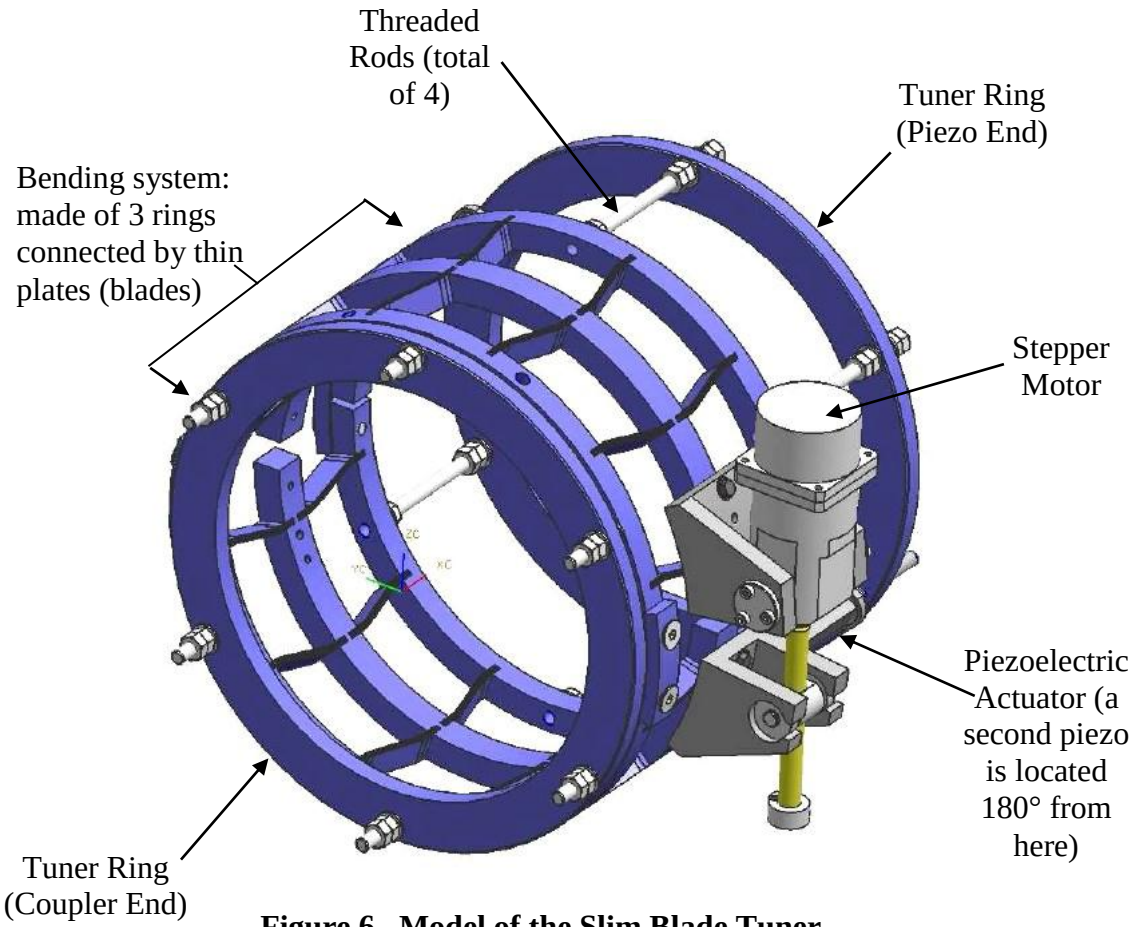

Figure 6. Model of the Slim Blade Tuner

The tuner assembly is composed of two parts that are defined by their tuning functions: slow tuner assembly and the fast tuner assembly. The slow tuner assembly consists of the stepper motor and the bending system. The bending system consists of three rings. One ring is rigidly attached to the helium vessel by way of the tuner ring (at the coupler end). The central "ring" is divided into two halves. The three rings are connected by thin plates, or blades.[19] The stepper motor "is rigidly connected to the helium vessel and produces a rotation of the [central ring halves]. The movement of the [central ring halves] induces the rotation of the bending system that changes the cavity length." The design of the bending system of the slow tune assembly "provides the amplification of the torque of the stepper motor, dramatically reducing the total movement and increasing the tuning sensitivity."[18]

The fast tuner assembly consists of two piezoelectric actuators that are parallel to each other and clocked 180° from each other. One side of the fast tuner assembly is fixed to the helium vessel, and the other side is fixed to the bending system of the slow tuner assembly. Figures 6 and 7 show how the piezoelectric actuators are installed.

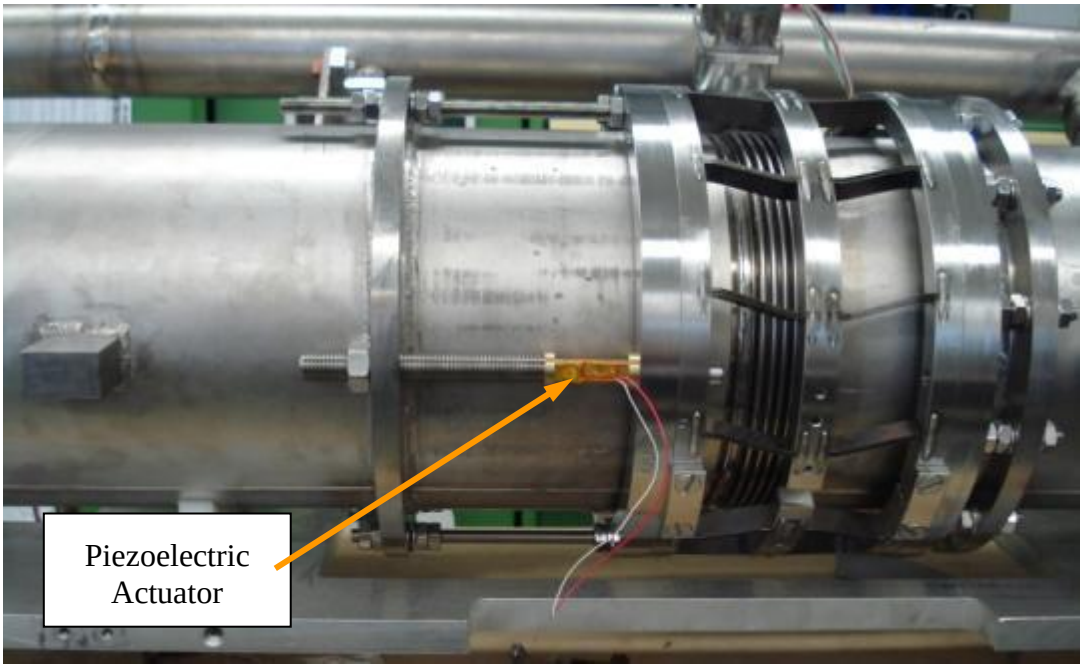

Figure 7. Slim Blade Tuner Installed on Helium Vessel. One of the two piezoelectric actuators is shown here. The other piezo is located 180° from the one shown here. [19]

The slow tuner system lengthens the vessel to maintain the RF cavity tuning after cooldown. The extension compensates for the combined effects of thermal contraction and pressurization, thus bringing the SRF cavity back to its desired resonance frequency. The stepper motor is actuated to increase the vessel length about 1.5-mm after cooldown. During operation of the RF cavity, the beam pulses create a tendency for the RF cavity to decrease in length. This phenomenon is called Lorentz Force Detuning. The piezoelectric actuators increase the vessel length about 13-μm during operation.(19)

Displacement and Force Limits of the Slim Blade Tuner

The limits of displacement that cause the slim blade tuner to change the length of the vessel are defined by deformation of the tuner assembly. The maximum tuning range of the blade tuner assembly corresponds to 14 steps of the stepper motor (see Section 6.3.3.2 of the Panzeri paper).(18) For more than 12 steps of the stepper motor, the tuner assembly goes from yield deformation into plastic deformation. The 12 steps corresponds to a displacement of less than 1.8-mm (Figure 37 of the Panzeri paper).

The tuner ring and four threaded rods provide an additional limit on the movement of the tuner assembly. During assembly at room temperature, the outer bolts are installed so that there is a 0.2-mm gap between each bolt and the tuner ring. In the final assembly, the tuner ring is compressing the piezoelectric actuators. The threaded rods act as a safety device in the case of a piezoelectric actuator failure or overpressure of the helium vessel. The threaded rods limit free movement of the tuner assembly to less than 0.2-mm.

The maximum expected force of compression on the tuner assembly is 3116-N during operation. This would occur when the beam tube is evacuated, the helium vessel is internally pressurized at 1-bar, and the helium vessel is externally pressurized at 1-bar. The expected compressive force is less than the maximum allowed compressive force of 10900-N. Note that the maximum allowed force takes into account a design factor of 1.5.[18]

The maximum calculated tensile force on the tuner assembly is 9630-N. This would occur during an emergency scenario when the helium vessel is internally pressurized to its MAWP of 4-bar. The maximum allowed tensile force is 19000-N. So when the vessel is at its internal MAWP, the expected tensile force exerted on the tuner assembly is well within the tuner's allowed tensile force. Note that these calculations took into account material properties at room temperature. The assumption was made that the material properties would be better at cryogenic temperatures. [18]

Table 3 summarizes the limits of movement and forces and the required movement and forces of the slim blade tuner assembly.

Table 3 – Summary of the Movement and Forces on the Slim Blade Tuner Assembly

	Maximum Allowed	**Required Value**
Slow tuner movement range	**0 – 1.8 mm**	**0 – 1.5 mm**
Free movement range	**0 – 0.2 mm**	**---**
Compressive force	**10,900 N**	**3116 N**
Tensile force	**19,00 N**	**9630 N**

Design Verification

Introduction and Summary

This analysis is intended to demonstrate that the RI-018 1.3 GHz SRF cavity conforms to the ASME Boiler and Pressure Vessel Code (the "Code"), Section VIII, Div. 1, to the greatest extent possible.

Where Div. 1 formulas or procedures are prescribed, they are applied to this analysis. For those cases where no rules are available, the provisions of Div. 1, U-2(g) are invoked. This paragraph of the Code allows alternative analyses to be used in the absence of Code guidance.

This cavity contains several features which are not supported by the Code. These are related primarily to materials, weld types, and non-destructive examination, and are addressed in detail in the next section of this report, titled "Non-Code Elements." These are accepted as unavoidable in the context of SRF cavities, and every effort is made to demonstrate thorough consideration of their implications in the analysis.

Advantage is taken of the increase in yield and ultimate strength which occurs in the Nb and Ti components at the operating temperature of 1.88 K.

The design pressures specified for this analysis are 30 psi (2.0-bar) at 293 K, and 60 psi (4.0-bar) at 1.88 K. This analysis confirms that the MAWPs of the vessel can be safely set at these pressures. Negligible margin for increase is available at 293 K, but the cold MAWP could be increased subtantially above 60 psi (4.0-bar).

In addition to these fundamental operating limits, the cavity was also shown to be stable at external pressures on the Ti shell of 15 psid (1.0-bar), and internal pressures on the Nb cavity of 15 psid (1.0-bar); these loadings could occur under fault conditions, when the beam and insulating vacuums have been compromised, and the helium volume has been evacuated.

Non-Code Elements

With regards to the Design Verification, the RI-018 1.3 GHz cavity does not comply with Div. 1 of the Code in the following ways:

1. Pure niobium, and Ti-45Nb titanium alloy are not "Code" materials, i.e., they have not been approved for use in Div. 1 or Div. 2 vessels, and there are no mechanical properties available from Code sources.
2. Category A and B joints in titanium must be either Type 1 butt welds (welded from both sides) or Type 2 butt welds (welded from one side with backing strip) only (see Div. 1, UNF-19(a)). Some category B (circumferential) joints are Type 3 butt welds (welded from one side with no backing strip). Also, the seam weld of the titanium cylinder, which is a Category A joint, is a Type 3 butt weld.
3. All joints in titanium vessels must be examined by the liquid penetrant method. (see Div. 1, UNF-58(b)). No liquid penetrant testing was performed on the vessel.
4. All electron beam welds in any material are required to be ultrasonically examined along their entire length. (see UW-11(e)). No ultrasonic examination was performed on the vessel.
5. The use of enhanced material properties at cryogenic temperatures for titanium is not allowed by the Code. For this design analysis, published material properties for titanium (outside the Code) at cryogenic temperatures are used.

Although material properties are not available for Nb or Ti-45Nb from Code sources, there has been extensive testing done on the Nb used in the cavity. The Code procedures for determining Div. 1 allowable stresses (see Section II, Part D, Mandatory Appendix 1) are conservatively applied to the measured yield and ultimate stresses to establish allowable stresses which are consistent with Code philosophy.

The evaluation of the Type 3 butt welds in the titanium is based on a de-rating of the allowable stress by a factor of 0.6, the factor given in Div. 1, Table UW-12 for such welds when not radiographed.

The exceptions listed above do not address Code requirements for material control, weld procedure certification, welder certification, etc. These requirements, and the extent to which the cavity production is in compliance with them, are addressed in the section titled "Weld Information."

Geometry

General

This analysis is based on geometry obtained from Drwg # 872825 and associated details.

Figure 8 shows the Dressed SRF Cavity, complete with shielding, piping and blade tuner.

For the analysis, only the Nb cavity, conical Ti-45Nb heads, and titanium shells and bellows are modeled, as well as the flanges to which the blade tuner attaches to the Ti cylindrical shell. These components are shown in Figure 9.

The geometric limits of the analysis are further clarified in Figure 10.

The individual cavity component names used in this report are shown in Figure 11.

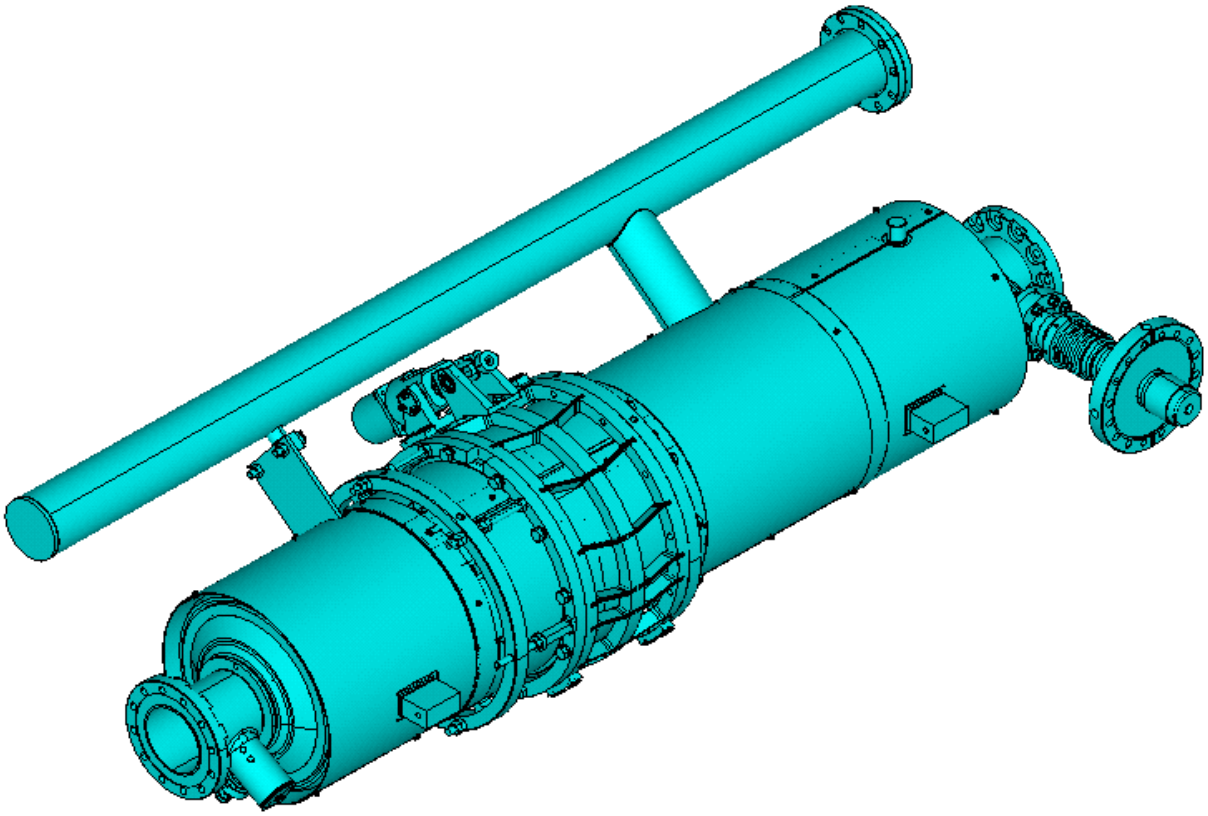

Figure 8. Dressed SRF cavity

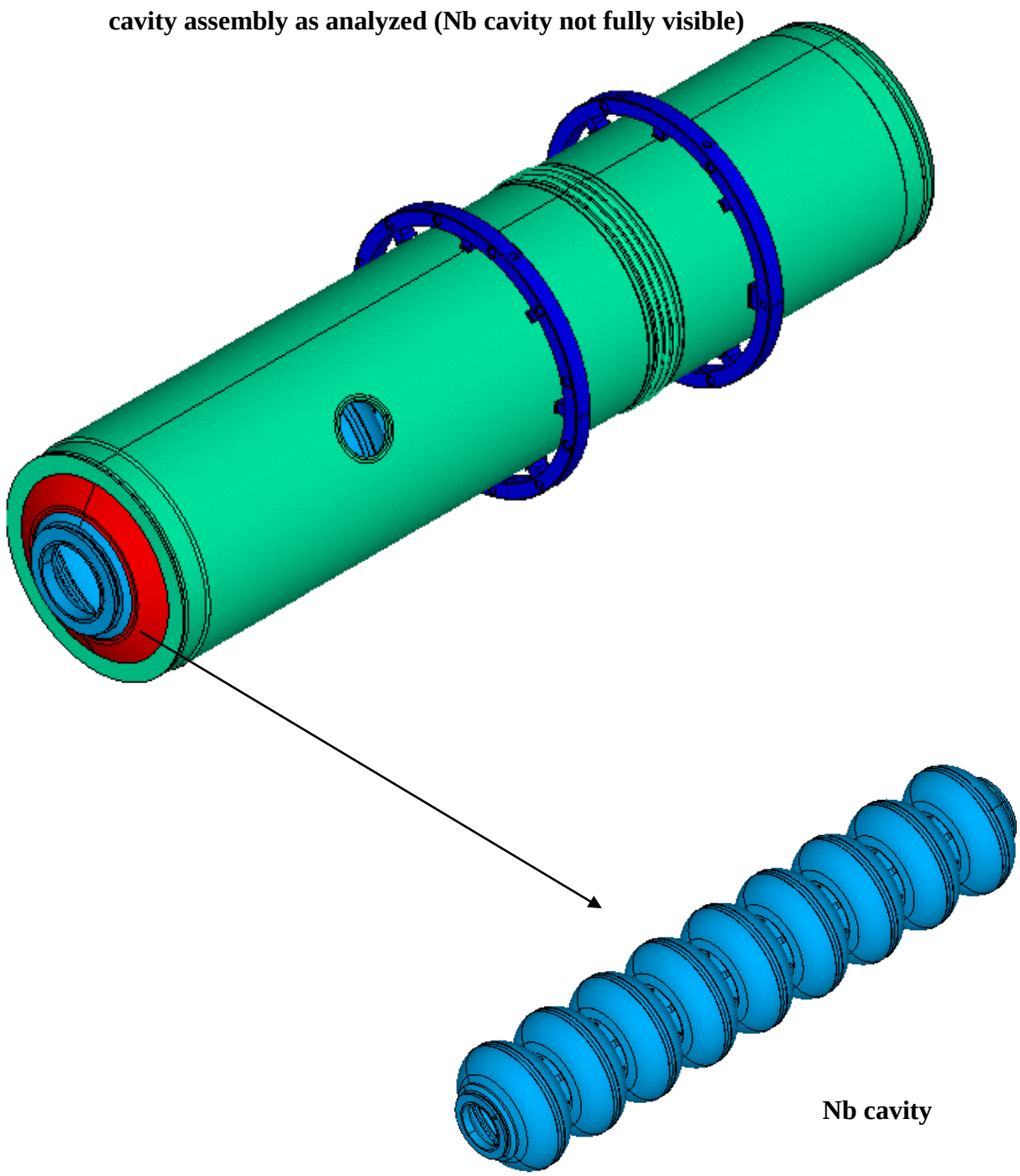

Figure 9. Cavity components considered in the analysis

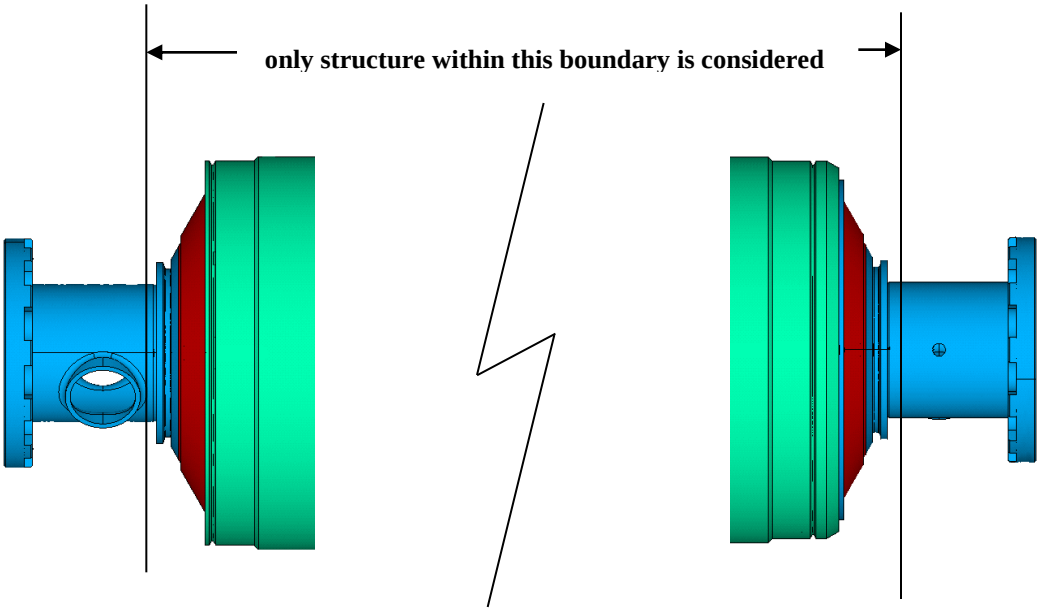

Figure 10. Geometric limits of analysis

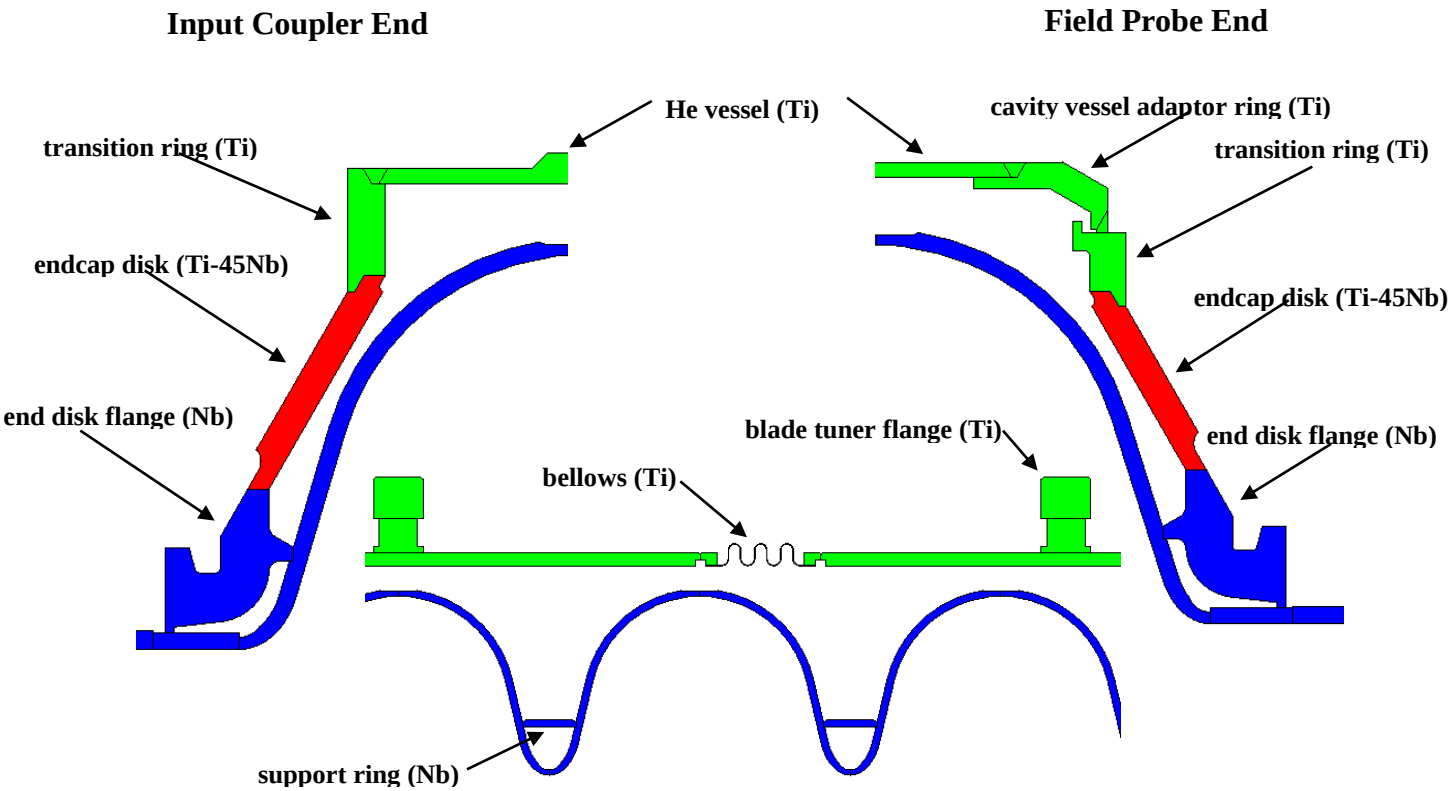

Figure 11. Parts and Materials

Welds

This section of the note describes the welds as a precourser to the weld stress evaluation. Details regarding the weld fabrication process are shown in a later section of this note titled "Welding Information."

Welds are produced by the EB process (in the Nb, and Nb-to-Ti transitions), and the TIG (GTAW) process (Ti-Ti welds).

All welds on the Dressed SRF Cavity are designed as full penetration butt welds. All welds are performed from one side, with the exception of the Ti-45Nb to Ti transition welds. Those welds are performed from two sides. No backing strips are used for any welds.

Table 3 summarizes the weld characteristics, including the Code classification of both joint category and weld type, and the corresponding efficiency.

The locations of the welds as numbered in Table 4 are shown in Figure 12. Detailed weld configurations and assumed zones of fusion are illustrated in Figs. 13-16.

Table 4 – Summary of Weld Characteristics

Weld	Weld Description	Drawing	Materials Joined	Weld Process	Joint Category	Code Weld Type	Joint Efficiency
1	End Tube Spool Piece to End Cap Flange	MD-439178	Nb-Nb	EB	B	3	0.6
2	End Tube Spool Piece to RF Half Cell	MD-439178	Nb-Nb	EB	B	1	0.7
3	End Cap Flange to RF Half Cell	MD-439178	Nb-Nb	EB	-	3	0.6
4	End Cap Flange to End Cap Disk	MD-439178	Nb-Ti45Nb	EB	B	3	0.6
5	End Cap Disk to Transition Ring	MD-439180 MD-440003	Ti45Nb-Ti	EB	B	1	0.7
6	1.3GHz 9 Cell RF Cavity (Transition Ring) to Cavity-Vessel Adapter Ring	872825	Ti-Ti	TIG	B	3	0.6
7 (FB End)	Cavity-Vessel Adapter Ring to G3 Helium Vessel Assembly	872825	Ti-Ti	TIG	C	7	0.7
7 (Coupler End)	G3 Helium Vessel Assembly to 1.3GHz 9 Cell RF Cavity	872825	Ti-Ti	TIG	C	7	0.7
8	Bellows Assembly to Tube	812815	Ti-Ti	TIG	B	3	0.6
9	Support Ring to Half Cell	MC-439172	Nb-Nb	EB	-	3	0.6
10	Dumbbell to Dumbbell	MD-439173	Nb-Nb	EB	B	3	0.6
11	Half Cell to Half Cell	MC-439172	Nb-Nb	EB	B	3	0.6
12	Bellows Convolutions to Weld Cuff	844575	Ti-Ti	TIG	B	3	0.6

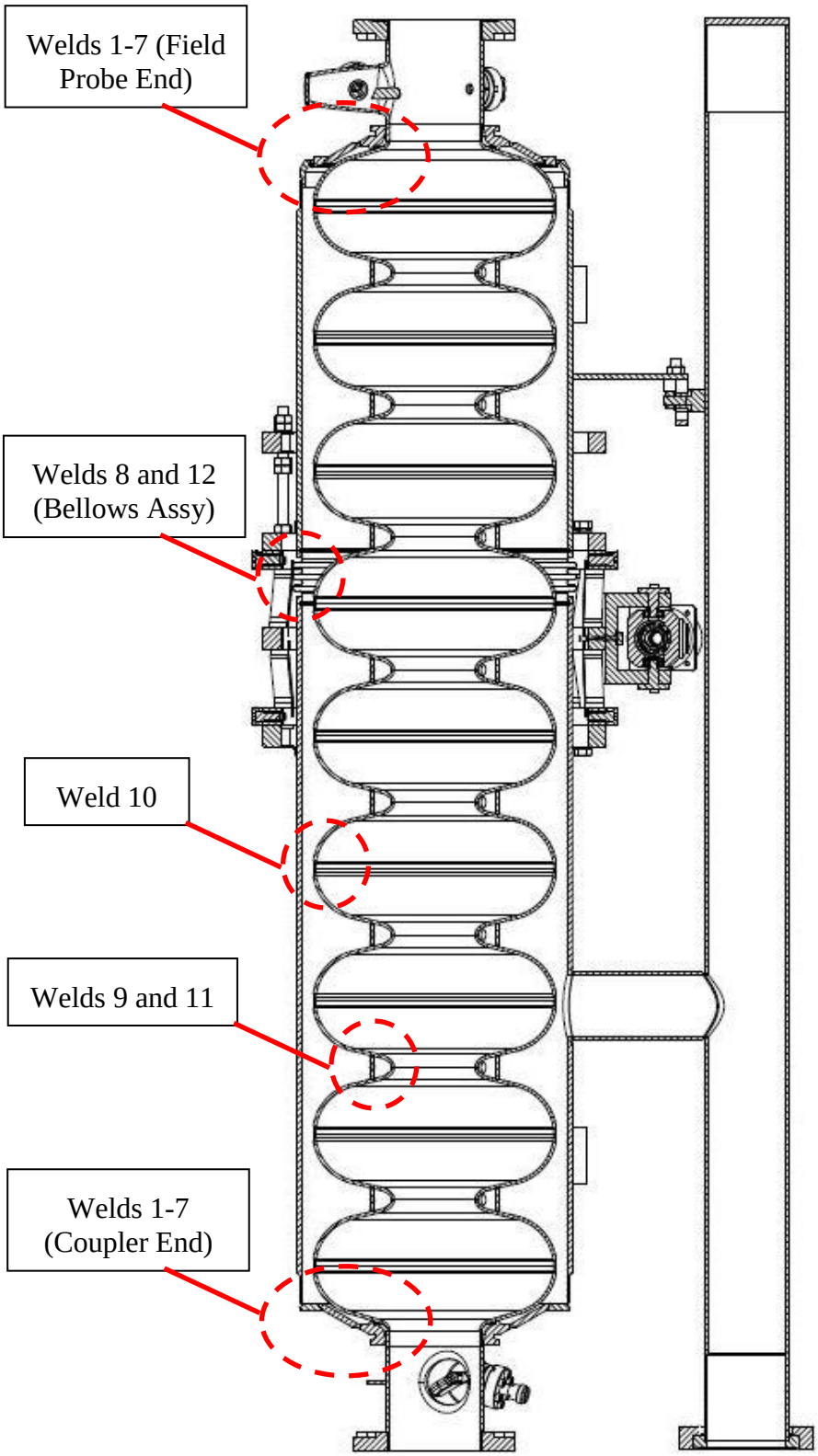

Figure 12. Welds Numbered as in Table 4

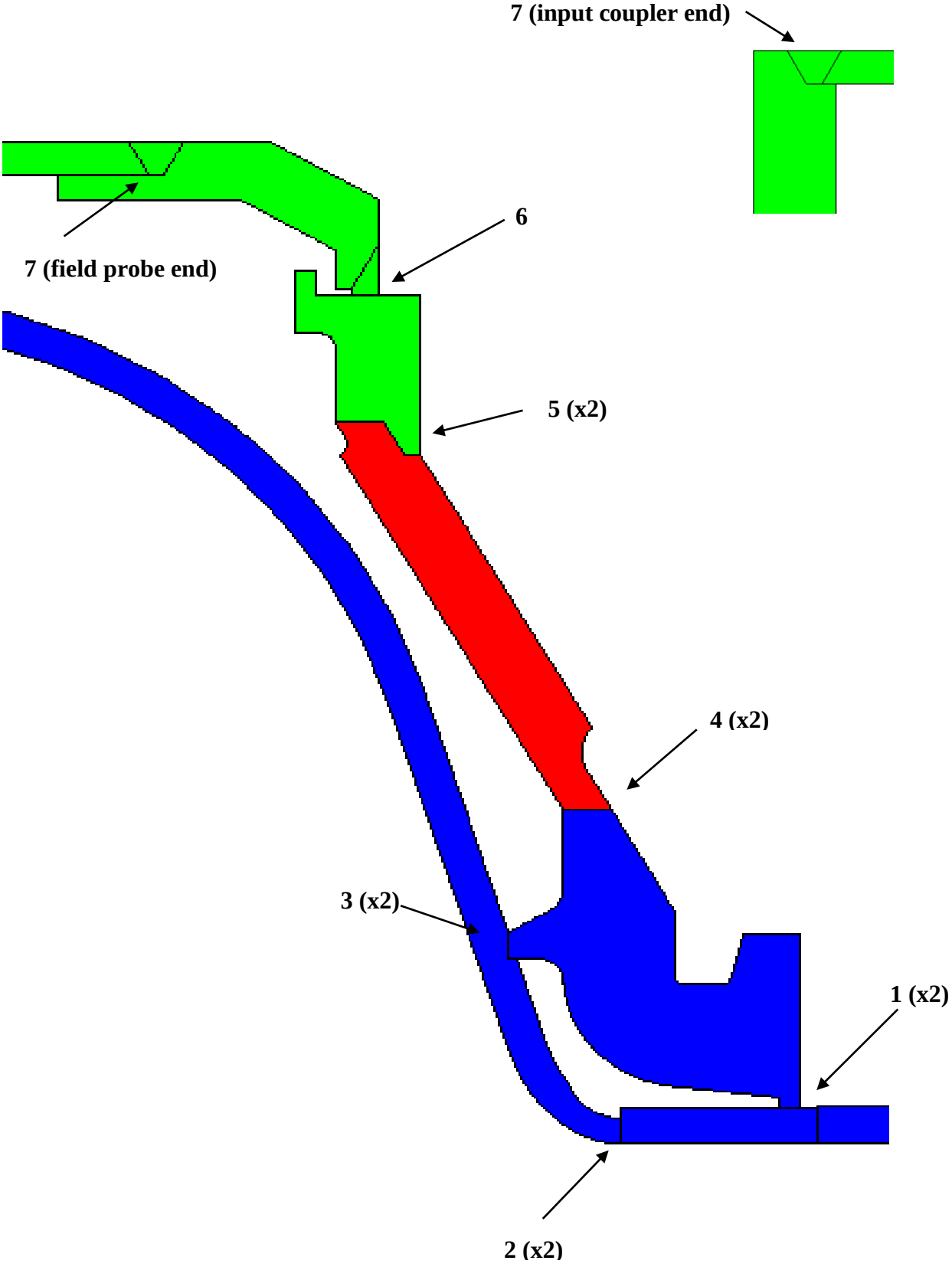

Figure 13. Weld Numbering

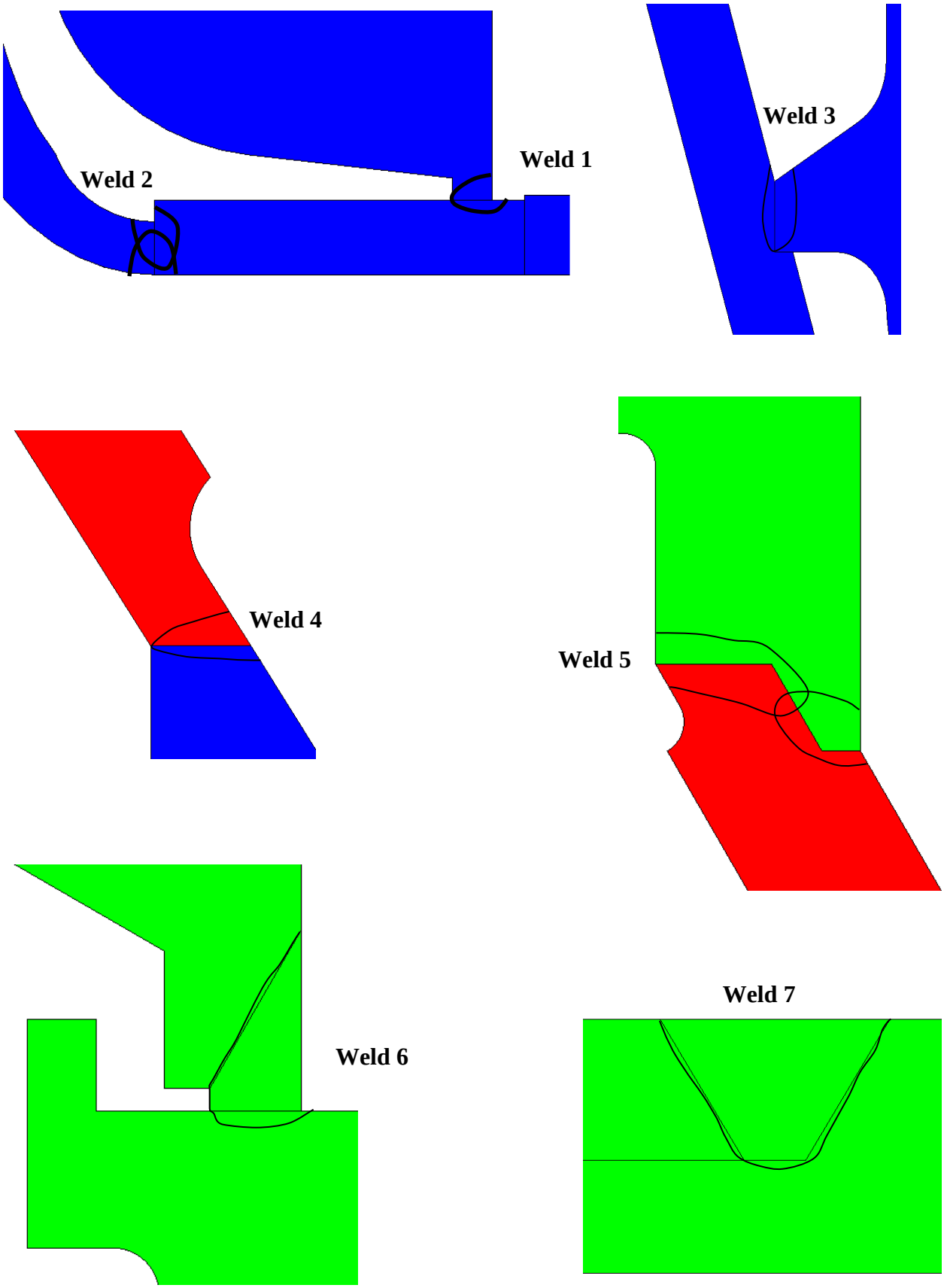

Figure 14. Assumed fusion zones welds 1-7

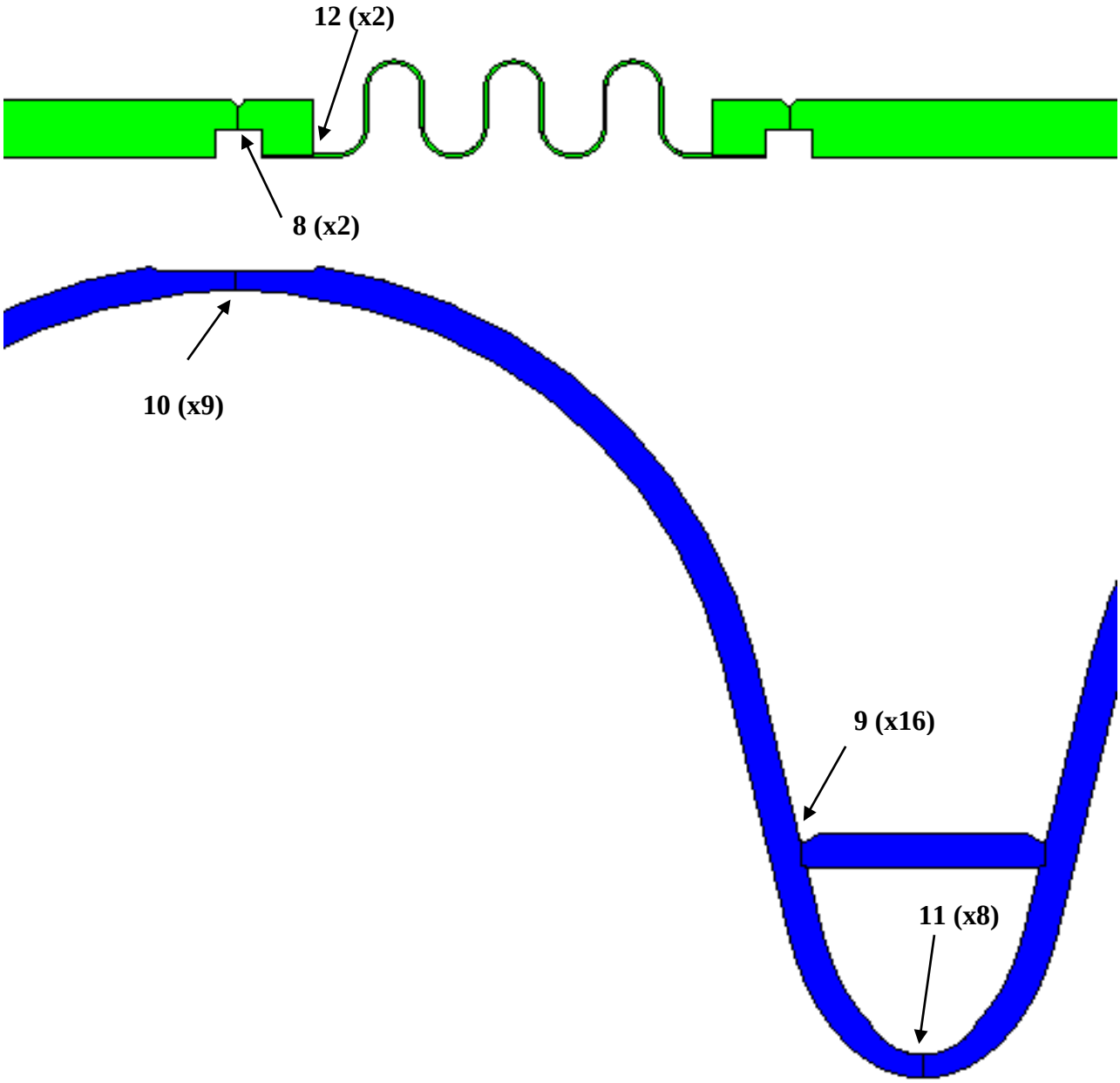

Figure 15. Location of welds 8 - 11

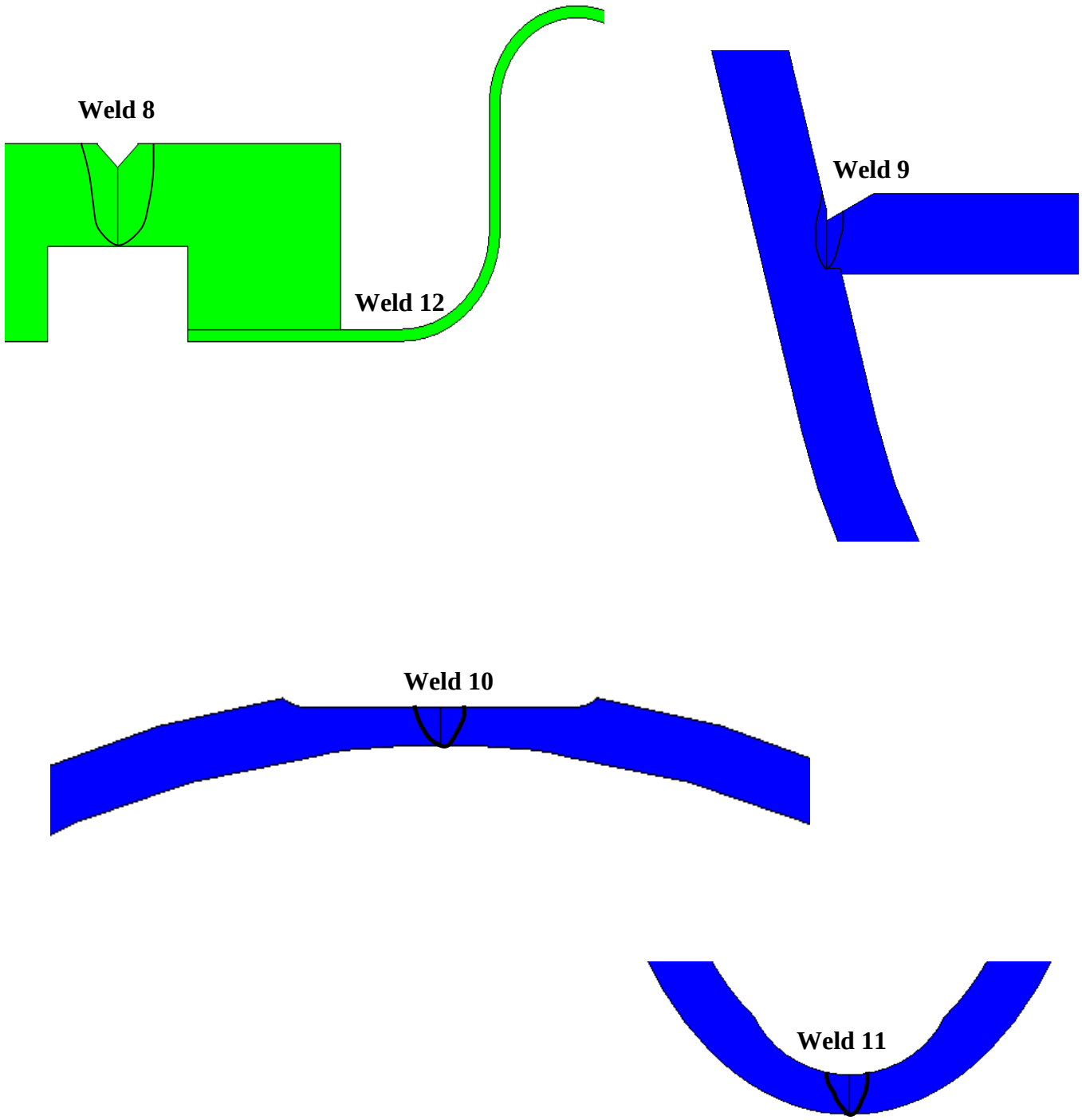

Figure 16. Assumed fusion zones – welds 8 - 11

Material Properties

General

The Dressed SRF Cavity is constructed of three materials: Pure niobium, Ti-45Nb alloy, and Grade 2 titanium. Of these materials, only Grade 2 Ti is approved by Div. 1 of the Code, and hence has properties and allowable stresses available from Section II, Part D.

The room temperature material properties and allowable stresses for this analysis are identical to those established in the analysis of the 3.9 GHz elliptical cavity[(5)]. The determination of the allowable stresses was based on Code procedures, and employed a multiplier of 0.8 for additional conservatism.

For the cryogenic temperature load cases, advantage was taken of the increase in yield and ultimate stress for the Nb and Ti. As with the room temperature properties, the properties for these materials at cryogenic temperature were also established by previous work related to the 3.9 GHz cavity[(6)].

Room temperature properties were used for the Ti-45Nb alloy for all temperatures, as no low temperature data on that alloy were available. However, it is highly likely that, like the elemental Nb and Ti, substantial increases in strength occur.

Material Properties

The elastic modulus, yield strength, ultimate strength, and integrated thermal contraction from 293 K to 1.88 K are given in Table 5 for each material used in the construction of the cavity.

Table 5 – Material Properties

	Property					
	Elastic Modulus (psi)	**Yield Strength (psi)**		**Ultimate Strength (psi)**		**Integrated Thermal Contraction 293K to 1.88K (in/in)**
Material		**293K**	**1.88 K**	**293K**	**1.88 K**	
Niobium	**1.52E+07**	**5500**	**46000**	**16600**	**87000**	**0.0014**
55Ti-45Nb	**9.00E+06**	**69000**	**N/A**	**79000**	**N/A**	**0.0019**
Titanium, Gr. 2	**1.55E+07**	**40000**	**121000**	**50000**	**162000**	**0.0015**

Allowable Stresses

The Code-allowable stresses for unwelded materials for the various categories of stress (see "Stress Analysis Approach" of this report) are given in Table 6.

The Code-allowable stresses for welded materials are calculated by multiplying the values of Table 6 by the joint efficiency given in Table 3.

Table 6 – Allowable Stresses for Each Stress Category (Units in PSI)

	Stress Category							
	P_m		P_l		$P_l + P_b$		$P_l + P_b + Q$	
Material	**1.88K**	**293K**	**1.88K**	**293K**	**1.88K**	**293K**	**1.88K**	**293K**
Nb	**19800**	**2900**	**29700**	**4350**	**29700**	**4350**	**59400**	**8700**
Ti-45Nb	**15300**	**15300**	**22950**	**22950**	**22950**	**22950**	**45900**	**45900**
Gr. 2Ti	**24500**	**9680**	**14520**	**36750**	**14520**	**36750**	**73500**	**29040**

Note:

P_m = primary membrane stress
P_l = primary local membrane stress
P_b = primary bending stress
Q = secondary stress

The allowed stresses for each Stress Category in Table 6 are defined in the Code, Division 2, Paragraphs 5.2.2.4(e) and 5.5.6.1(d) and are reproduced here, where S is defined in Table 7:

$$P_m \leq S$$
$$P_l \leq 1.5*S$$
$$(P_l + P_b) \leq 1.5*S$$
$$(P_l + P_b + Q) \leq 3*S$$

The allowable stresses for each stress category in Table 6 are based on the value S, which is the allowable stress of the material at the design temperature. Table 7 shows the values of S for each material at 1.88K and 293K. Note that S includes the de-rating factor of 0.8 of the established allowable stress for a material for an experimental vessel. The de-rating follows the guidelines in FESHM Chapter 5031.

Table 7 – Allowable Stress "S" (Units in MPa [PSI])

	Allowable Stress (S)		Established Values	
Material	**1.88°K**	**293°K**	**1.88°K**	**293°K**
Nb	**137 [19870]**	**20 [2900]**	**171 [24801]**	**25 [3626]**
Ti-45Nb	**106 [15374]**	**106 [15374]**	**133 [19290]**	**133 [19290]**
Gr. 2Ti	**169 [24511]**	**66.4 [9630]**	**213 [30893]**	**83 [12038]**

Loadings

General

The RI-018 cavity is shown in cross section in Figure 17.

There are three volumes which may be pressurized or evacuated:

1. The LHe volume of the helium vessel
2. The volume outside the cavity typically evacuated for insulation
3. The volume through which the beam passes on the inside of the Nb cavity itself.

The pressures in these volumes are denoted as P1, P2, and P3, respectively.

With regards to pressure, typical operation involves insulating vacuum, beam vacuum, and a pressurized LHe volume. Atypical operation may occur if the insulating or beam vacuums are spoiled, and the LHe space simultaneously evacuated. This reverses the normal operational stress state of the device, producing an external pressure on the Ti shell, and an internal pressure on the Nb cavity; however, this pressure is limited to a maximum differential of 15 psid.

In addition to the pressure loads, the cavity also sees dead weight forces due to gravity which are reacted at the Ti blade tuner flanges, as well thermal contractions when cooled to the operating temperature of 1.88 K, and a strain-controlled extension by the blade tuner after cooldown.

All of these loadings are considered in this analysis. Specific load cases are defined in the next section.

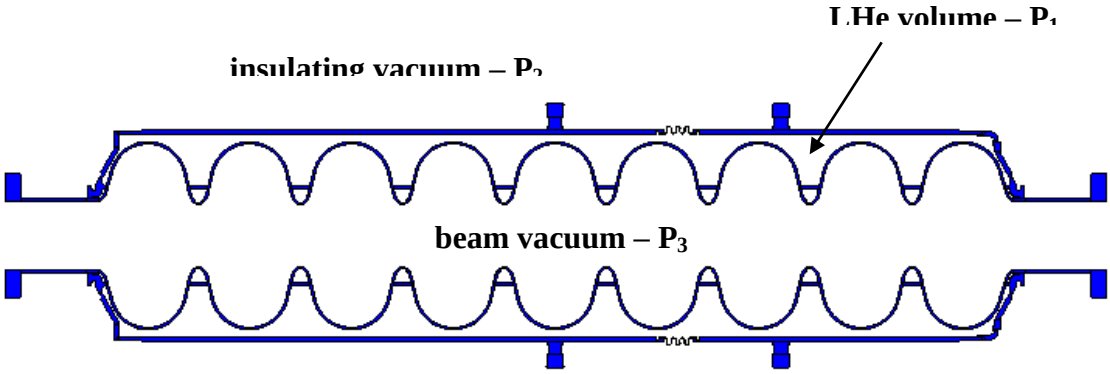

Figure 17. Volumes for Pressure/Vacuum

Load Cases

The cavity is subjected to five basic loads:

1. Gravity
2. LHe liquid head
3. Thermal contraction
4. Tuner extension
5. Pressure (internal and external)

Three of these loads – gravity, liquid head, and pressure – produce both primary and secondary stresses. The remaining loads – thermal contraction and tuner extension – are displacement-controlled loads which produce secondary stresses only. This results in five load cases. These load cases are shown in Table 8, along with the temperatures at which the resulting stresses were assessed, and the stress categories that were applied.

Table 8 – Load Cases

Load Case	Loads	Condition Simulated	Temperature for Stress Assessment	Applicable Stress Categories
1	1. Gravity 2. P_1=30 psi 3. P_2=P_3 = 0	Warm Pressurization	293 K	P_m, P_l , P_l + Q
2	1. Gravity 2. LHe liquid head 3. P_1=60 psi 4. P_2=P_3 = 0	Cold operation, full, maximum pressure – no thermal contraction	1.88 K	P_m, P_l , P_l + Q
3	1. Cool down to 1.88 K 2. Tuner extension of 0.083 in	Cool down and tuner extension, no primary loads	1.88 K	Q
4	1. Gravity 2. LHe liquid head 3. Cool down to 1.88 K 4. Tuner extension 5. P_1=60 psi 6. P_2=P_3 = 0	Cold operation, full LHe inventory, maximum pressure – primary and secondary loads	1.88 K	Q
5	1. Gravity 2. P_1 = 0 3. P_2 = P_3 = 15 psi	Insulating and beam vacuum upset, helium volume evacuated	293 K	P_m, P_l , P_l + Q

Stress Analysis Approach

The goal of the analysis is to qualify the vessel to the greatest extent possible in accordance with the rules of the Code, Section VIII, Div. 1. This Division of the Code provides rules covering many cases; however, there are features of this cavity and its loadings for which the Division has no rules. This does not mean that the vessel cannot be qualified by Div. 1, since Div. 1 explicitly acknowledges the fact that it does not prevent formulaic procedures ("rules") covering all design possibilities. From U-2(g)

"This Division of Section VIII does not contain rules to cover all details of design and construction. Where complete details are not given, it is intended that the Manufacturer, subject to the acceptance of the Inspector, shall provide details of design and construction which will be as safe as those provided by the rules of this Division."

Applying Division I Rules to the Cavity

Division 1 rules relate to both geometries and loads. For either, there are few rules applicable to the features of the cavity.

The only components of the cavity which can be designed for internal and external pressure by the rules of Div. 1 are the Ti shells and the Ti bellows. In the Ti shell, there are two penetrations for connection of externals for which the required reinforcement can also be determined by Code rules.

The conical heads have half-apex angles exceeding 30 degrees, and no knuckles; Div. 1, Appendix 1, 1-5(g) states that their geometry falls under U-2(g).

The Nb cavity itself resembles an expansion joint, but does not conform to the geometries covered in Div. 1, Appendix 26. Therefore, U-2(g) is again applied.

UG-22(h) states that "temperature gradients and differential thermal contractions" are to be considered in vessel design, but provides no rules to cover the cavity. In this analysis, all thermal contraction effects are addressed under U-2(g).

The cavity is also subjected to a controlled displacement loading from blade tuner. There are no rules in Div. 1 covering such a loading, so U-2(g) is applied.

The applicable Code rules for each component are summarized in Table 9.

Table 9 - Applicable Code, Div. 1 Rules for 1.3 GHz Cavity

	Loading		
Component	**Internal/External Pressure**	**Thermal Contraction**	**Tuner Extension**
Nb cavity	**U-2(g)**	**U-2(g)**	**U-2(g)**
Conical heads	**U-2(g)**	**U-2(g)**	**U-2(g)**
Ti shells	**UG-27/UG-28**	**U-2(g)**	**U-2(g)**
Ti bellows	**Appendix 26**	**U-2(g)**	**U-2(g)**

Applying U-2(g)

U-2(g) is satisfied in this analysis by the application of the design-by-analysis rules of the Code, Section VIII, Div. 2, Part 5.

These rules provide protection against plastic collapse, local failure, buckling, fatigue, and ratcheting. The specific sections of Part 5 applied here are:

1. Plastic collapse – satisfied by an elastic stress analysis performed according to 5.2.2.
2. Ratcheting - satisfied by an elastic stress analysis performed according to 5.5.6.1
3. Local failure – satisfied by an elastic stress analysis performed according to 5.3.2
4. Buckling – satisfied by a linear buckling analysis performed according to 5.4.1.2(a).
5. Fatigue assessment – the need for a fatigue analysis is assessed according to 5.5.2.3

In general, an elastic stress analysis begins by establishing stress classification lines (SCLs) through critical sections in the structures according to the procedures of Part 5, Annex 5A. The stresses along these lines are then calculated (in this case, by an FEA), and "linearized" to produce statically equivalent membrane stress and bending stress components. The allowable stress for each component depends on the category of the stress. This category (or classification) depends on the location of the SCL in the structure, and the origin of the load. Stresses near discontinuities have higher allowables to reflect their ability to redistribute small amounts of plasticity into surrounding elastic material. Stresses produced solely by strain-controlled loads (e.g., thermal contractions and blade tuner extension) are given higher allowables regardless of their location in the structure.

Allowable stresses are expressed in terms of multiples of S, which is the allowable general primary membrane stress. The values of S used in this analysis are given in Table 7.

Division 1 Calculations by Rule

Ti Cylindrical Shells

Thickness for Internal Pressure

The minimum thickness required for the Ti cylindrical shells under internal pressure can be calculated from UG-27(c)(1):

$$t = \frac{PR}{SE - 0.6P}$$

where: t = required thickness
P = pressure = 30 psi (warm), 60 psi (cold)
R = inside radius of shell = 4.53 in
E = efficiency of seam weld (Type 3 TIG weld: one-sided butt weld, no radiography) = 0.6
S = maximum allowable membrane stress = 9680 psi (warm), 24500 psi (cold)

Substituting, the minimum required thickness when warm and pressurized to 30 psi is 0.023 in. The minimum required thickness when cold and pressurized to 60 psi is 0.018 in. The actual minimum thickness of the shells is 0.098 in (2.5 mm). Therefore, the Ti cylindrical shells meet the minimum thickness requirements of UG-27 for internal pressure.

Thickness for External Pressure (Buckling)

The minimum thickness required for the Ti cylindrical shells under external pressure can be calculated from UG-28(c). This procedure uses charts found in the Code, Section II, Part D. These charts are based on the geometric and material characteristics of the vessel.

Using: L = 20 in
D_o = 9.25 in
t = 0.055 in

Then: L/D = 2.2
D_o/t = 168

From the Code, Section II, Part D, Subpart 3, Figure G, the factor A is 0.00027. From Figure NFT-2 (the material chart for Grade 2 Ti), the factor B is 2100.

The allowable pressure is then

$$P = \frac{4B}{3(D_o / t)}$$

Substituting give P = 16.6 psi. This is approximately equal to the 15 psi maximum external vessel for which the vessel must be qualified.

The actual minimum thickness of the Ti shell is 0.1 inches. This occurs near the ends, and it is unlikely that the collapse is well predicted by this thickness, due to its short length, and proximity to the conical head, which will tend to stiffen the region. If we assume, however, that the entire shell is this thickness, and repeat the calculations above, the allowable external pressure is 72 psi.

If we assume the collapse is better predicted by the predominate thickness of 0.2 inches, then the factor A = 0.0019, the factor B = 21000, and the allowable external pressure is 345 psi.

In any case, the required minimum thickness of 0.055 inches is less than the actual minimum thickness anywhere on the Ti cylindrical shell. Therefore, the Ti shell satisfies the Code requirement for external pressure.

Penetrations

The Ti cylindrical shell contains two penetrations. These are shown in Figure 18. The largest of these penetrations is 2.16 inches (54.8 mm) in diameter.

From UG-36(c)(3):

"Openings in vessels not subject to rapid fluctuations in pressure do not require reinforcement other that inherent in the construction under the following conditions: welded, brazed, and flued connections meeting applicable rules and with a finished opening not larger than 3.5 in diameter – in vessel shells or heads with a required minimum thickness of 3/8 inch or less."

The minimum required thickness of the shell is largest for the case of 30 psi pressurization, warm. This thickness (calculated in 7.1.1) is 0.023 in. This is less than 3/8 in. Therefore, since the penetrations are smaller than 3.5 in. in diameter, no additional reinforcement is required for either penetration in the Ti shells.

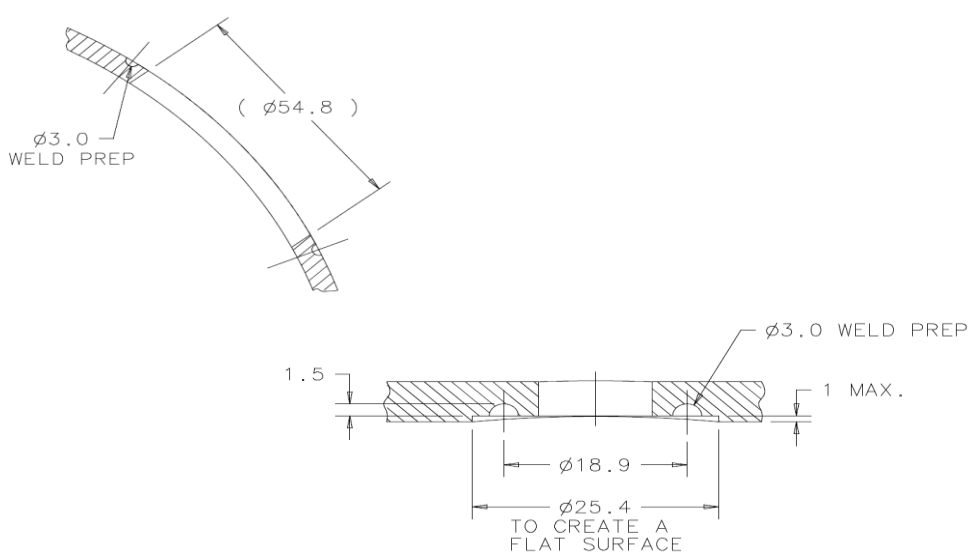

Figure 18. Penetrations in the Ti Shell

Ti Bellows

The design of metallic expansion joints (e.g., bellows) is addressed by Appendix 26 of the Code. The formulas permit calculation of internal and external pressure limits. In a bellows, the pressure may be limited not only by stress, but by squirm (internal pressure), and collapse (external pressure.) The analysis shows that the bellows with an internal MAWP of 2.0-bar (30-psi) at room temperature or an external MAWP of 1.0-bar (14.5-psia) follows the rules of Appendix 26. The allowed value S is for titanium at room temperature (see Table 7).

Table 10 defines the stresses that are examined in the bellows analysis. Table 11 summarizes how the calculated or actual stresses comply with the allowed stresses.

The details of the Appendix 26 calculations are presented in Appendix C.

Table 10 – Definition of Stresses, Coefficients in the Bellows Analysis, following the Code, Division 1, Appendix 26.

		Units
S1	Circumferential membrane stress in bellows tangent, due to pressure P	psi
S2e	Circumferential membrane stress due to pressure P for end convolutions	psi
S2i	Circumferential membrane stress due to pressure P for end convolutions	psi
S11	Circumferential membrane stress due to pressure P for the collar	psi
S3	Meridional membrane stress due to pressure P	psi
S4	Meridional bending stress due to pressure P	psi
P	Design pressure	psi
S	Allowable stress of bellows material	psi
Cwc	Weld joint efficiency of collar to bellows (no radiography, single butt weld)	--
Sc	Allowable stress of collar material	psi
Kf	Coefficient for formed bellows	--
Psc	Allowable internal pressure to avoid column instability	psi
Psi	Allowable internal pressure based on in-plane instability	psi
Pa	Allowable external pressure based on instability	psi

Table 11 – Complying with Appendix 26 Rules for Internal Pressure of 2.0-bar (30-psi)

Calculated or Actual Value	Allowed Value	Requirement	Applicable Paragraph
S1 = 1416 psi	S = 9630 psi	S1 < S	26-6.3.1
S11 = 1479 psi	Cwc*Sc = 5778	S11 < Cwc*Sc	26-6.3.2
S2e = 4276 psi	S = 9630 psi	S2e < S	26-6.3.3(a)(1)
S2i = 4851 psi	S = 9630 psi	S2i < S	26-6.3.3(a)(2)
S3+S4 = 7547 psi	Kf*S = 28890 psi	(S3+S4) < (Kf*S)	26-6.3.3(d)
P = 30 psi	Psc = 13300 psi	P ≤ Psc	26-6.4.1
P = 30 psi	Psi = 212 psi	P ≤ Psi	26-6.4.2
External pressure = 14.5 psia	Pa = 408 psi	Ext. pressure < Pa	26-6.5

Longitudinal Weld in Bellows Convolution

The allowable stress S = 9630 psi for the bellows convolution assumes a weld joint efficiency of 1.0. The bellows is hydroformed from a rolled tube with a longitudinal (seam) weld that is not radiographed. Let's evaluate the weld by de-rating the allowable stress S by a factor of 0.6, which is the factor for a Type 3 weld that is not radiographed. The de-rated allowable stress is 9630*0.6 = 5778 psi. This is still greater than the calculated circumferential stresses of S1, S2e, and S2i in the convolutions.

Fatigue Analysis for Titanium Bellows

The equations in the Code for fatigue analysis of a bellows are not valid for titanium. The manufacturer of the titanium bellows for the helium vessel provided design calculations following the Standards of the Expansion Joint Manufacturers Association [(7)]. The allowable fatigue life is calculated with the equation

$$N_C = \left(\frac{c}{S_T - b} \right)^a$$

where a, b, and c are material and manufacturing constants. The manufacturer uses the same material and manufacturing constants as what EJMA uses for austenitic stainless steel. In addition, the manufacturer includes a safety factor of two in their calculation of the allowable number of cycles since the titanium bellows is a custom-made project. The manufacturer calculated an allowable number of cycles to be N_C = 764,058.

The slow tuner system has the capability of increasing the vessel length less than 2.0-mm after each cooldown. The bellows extension will occur 200 times over the lifetime of the vessel. This is far less than the allowable number of cycles, so the bellows is designed well within the limits of fatigue failure.

Copies of the Mathcad analysis and the manufacturer's calculations are available online at

http://ilc-dms.fnal.gov/Workgroups/CryomoduleDocumentation/ACC013/ti-bellows-calcs/

(note that the bellows design for RI-018 is the same as the bellows design for ACC-013)

Finite Element Model

A 3-d finite element half model was created in ANSYS. Elements were 10-node tetrahedra, and 20-node hexahedra. Material behavior was linear elastic.

The blade tuner, which mounts between the two Ti flanges, is very rigid. Axial constraint of the helium vessel was therefore simulated by constraining the outer surface of each flange in the Z (axial) direction. This constraint places the line of action at a maximum distance from the shell, producing the maximum possible moment on the welds between the Ti blade tuner flanges and the shell.

For the cool down loading, the distance between the Ti flanges was assumed to close by an amount equivalent to the shrinkage of a rigid stainless steel mass spanning the flanges.

The constraint against gravity is simulated by fixing the flange outer surface nodes at 180 degrees in the Y (vertical) direction.

The finite element model is shown in Figure 19. Figure 20 shows mesh detail at various locations within the model.

The complete model was used to demonstrate satisfaction of the plastic collapse, ratcheting, and local failure criteria. Subsets of the model were also used to address the linear buckling of the Nb cavity and conical head.

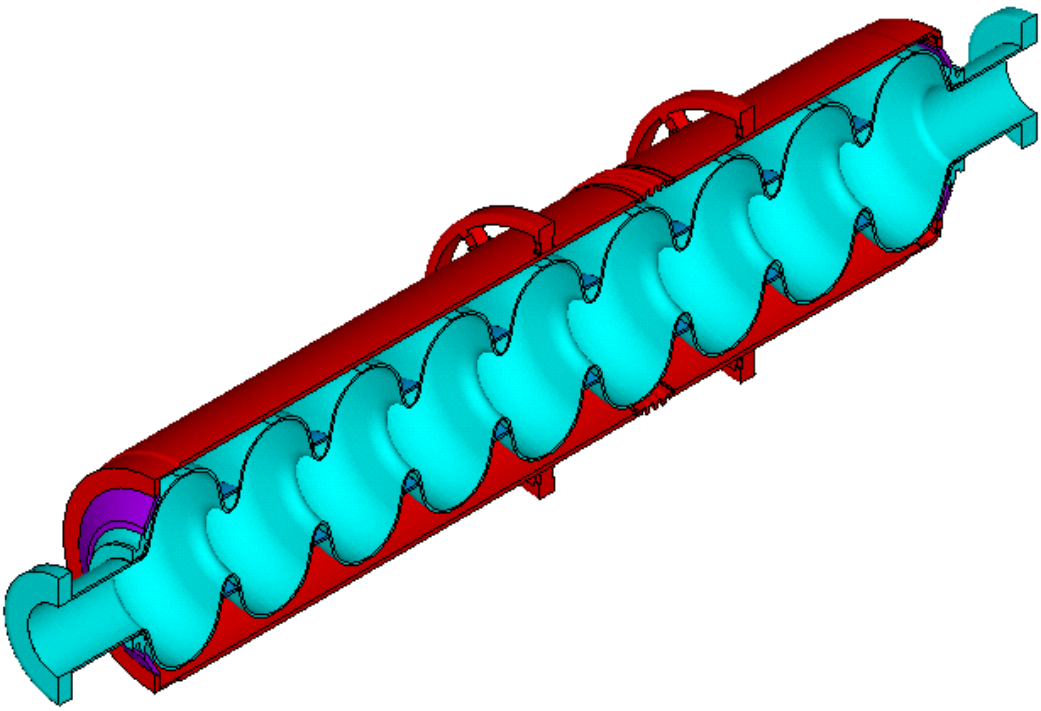

Figure 19. The Finite Element Model

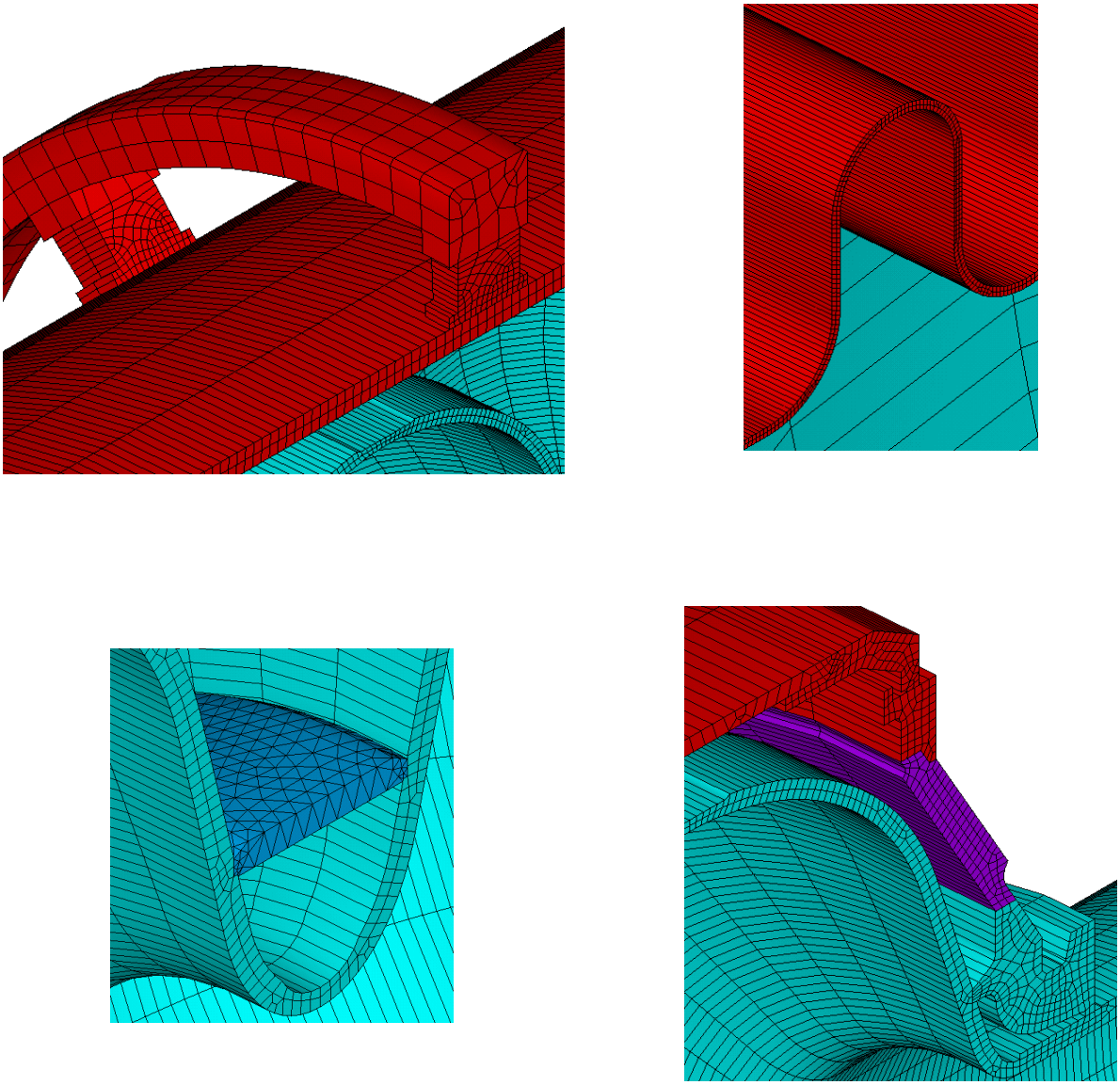

Figure 20. Mesh Details

Stress Analysis Results

General

The complete finite element model was run for the five load cases. Stress classification lines, shown in Figure 21, were established through the critical sections of the structure. The stresses along these lines were linearized with ANSYS, and separated into membrane and bending components. The linearized stresses (expressed in terms of von Mises equivalent stress, as required by 5.2.2.1(b)) are categorized according to the Code, Div. 2, Part 5, 5.2.2.2 into primary and secondary stresses.

The primary and secondary stresses along each SCL for each of the five load cases are given in Tables 12-16. Where more than one weld of a given number is present (as indicated in Figs 13 and 15) the weld with the highest stresses was assessed.

The stresses from Tables 12-16 are used to demonstrate satisfaction of two of the criteria listed in 5.2 of this report: Protection against plastic collapse, and protection against ratcheting. Demonstrating protection against local failure employs the complete model, but requires the extraction of different quantities.

Note: The required minimum thicknesses of the Ti shells for internal and external pressure are calculated by Div. 1 rules in section 7.0 of this report. Therefore, no SCLs addressing the Ti shell thickness far from welds or other discontinuities are established here. See the Appendix B for verification that the FEA produces the correct hoop stress in the Ti shell.

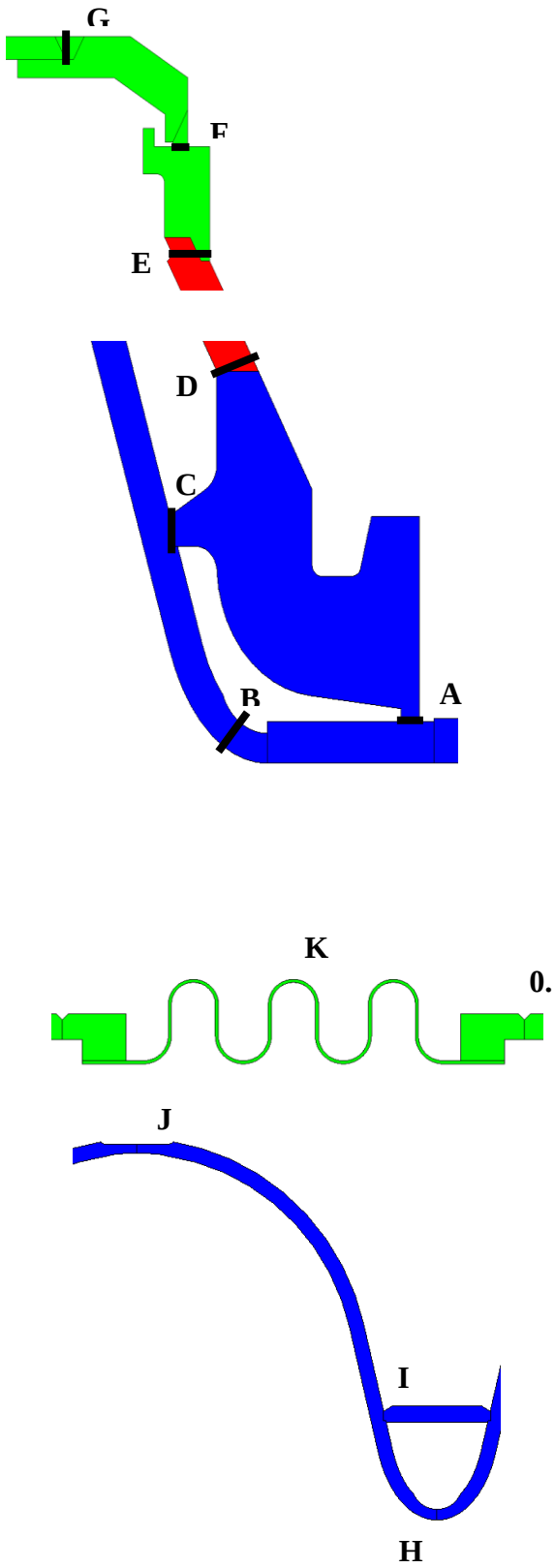

Figure 21. Stress classification lines

Table 12. Load Case 1 – Stress Results

Material	SCL	Weld #	Membrane Stress (psi)	Classification	Allowable Stress (psi)	Ratio S_{fe}/S_a
Nb weld	A	1	165	P_m	1740	0.09
Nb weld	B	2	198	P_l	3045	0.06
Nb weld	C	3	1655	P_m	1740	0.95
Nb weld to NbTi	D	4	426	P_m	1740	0.24
Ti weld to NbTi	E	5	255	P_m	6775	0.04
Ti weld	F	6	711	P_m	5808	0.12
Ti weld	G	7	1130	P_m	9680	0.12
Nb weld	H	11	643	P_m	1740	0.37
Nb weld	I	9	932	P_m	1740	0.53
Nb weld	J	10	519	P_m	1740	0.30
Ti	K	-	4079	P_m	9680	0.42
Ti weld	L	12	2112	P_l	8712	0.24
Ti weld	M	8	914	P_m	5808	0.15

Material	SCL	Weld #	Membrane + Bending	Classification	Allowable Stress	Ratio S_{fe}/S_a
Nb weld	A	1	569	P_m+P_b	2610	0.22
Nb weld	B	2	724	P_l+Q	6090	0.12
Nb weld	C	3	2817	Q	5220	0.54
Nb weld to NbTi	D	4	1507	P_m+P_b	2610	0.58
Ti weld to NbTi	E	5	1122	P_m+P_b	10160	0.11
Ti weld	F	6	1552	P_m+P_b	8712	0.18
Ti weld	G	7	3985	P_m+P_b	14520	0.27
Nb weld	H	11	661	P_m+P_b	2610	0.25
Nb weld	I	9	2090	Q	5220	0.40
Nb weld	J	10	715	P_m+P_b	2610	0.27
Ti	K	-	9876	P_m+P_b	14520	0.68
Ti weld	L	12	9909	P_l+Q	21780	0.45
Ti weld	M	8	962	P_m+P_b	8712	0.11

Table 13. Load Case 2 – Stress Results

Material	SCL	Weld #	Membrane Stress (psi)	Classification	Allowable Stress (psi)	Ratio S_{fe}/S_a
Nb weld	A	1	287	P_m	11880	0.02
Nb weld	B	2	434	P_l	20800	0.02
Nb weld	C	3	2970	P_m	11880	0.25
Nb weld to NbTi	D	4	882	P_m	9170	0.1
Ti weld to NbTi	E	5	545	P_m	10700	0.05
Ti weld	F	6	1490	P_m	14700	0.10
Ti weld	G	7	2341	P_m	24500	0.09
Nb weld	H	11	1283	P_m	11880	0.11
Nb weld	I	9	1707	P_m	11880	0.14
Nb weld	J	10	1036	P_m	11880	0.09
Ti	K	-	8204	P_m	24500	0.33
Ti weld	L	12	5246	P_l	22050	0.24
Ti weld	M	8	1831	P_m	14700	0.12

Material	SCL	Weld #	Membrane + Bending (psi)	Classification	Allowable Stress (psi)	Ratio S_{fe}/S_a
Nb weld	A	1	1148	P_m+P_b	17820	0.06
Nb weld	B	2	1432	P_l+Q	41580	0.03
Nb weld	C	3	5222	Q	35640	0.15
Nb weld to NbTi	D	4	3006	P_m+P_b	1375	0.22
Ti weld to NbTi	E	5	2300	P_m+P_b	16060	0.14
Ti weld	F	6	3241	P_m+P_b	22050	0.15
Ti weld	G	7	8166	P_m+P_b	36750	0.22
Nb weld	H	11	1319	P_m+P_b	17820	0.07
Nb weld	I	9	3719	Q	35640	0.10
Nb weld	J	10	1396	P_m+P_b	17820	0.08
Ti	K	-	19655	P_m+P_b	36750	0.53
Ti weld	L	12	16403	P_l+Q	44100	0.37
Ti weld	M	8	1923	P_m+P_b	22050	0.09

Table 14. Load Case 3 – Stress Results

Material	SCL	Weld #	Membrane Stress (psi)	Classification	Allowable Stress (psi)	Ratio S_{fe}/S_a
Nb weld	A	1	821	N/A	N/A	N/A
Nb weld	B	2	109	N/A	N/A	N/A
Nb weld	C	3	3386	N/A	N/A	N/A
Nb weld to NbTi	D	4	3560	N/A	N/A	N/A
Ti weld to NbTi	E	5	1252	N/A	N/A	N/A
Ti weld	F	6	961	N/A	N/A	N/A
Ti weld	G	7	1072	N/A	N/A	N/A
Nb weld	H	11	1974	N/A	N/A	N/A
Nb weld	I	9	5055	N/A	N/A	N/A
Nb weld	J	10	1287	N/A	N/A	N/A
Ti	K	-	5068	N/A	N/A	N/A
Ti weld	L	12	1054	N/A	N/A	N/A
Ti weld	M	8	292	N/A	N/A	N/A

Material	SCL	Weld #	Membrane + Bending (psi)	Classification	Allowable Stress (psi)	Ratio S_{fe}/S_a
Nb weld	A	1	1554	Q	35640	0.04
Nb weld	B	2	639	Q	41580	0.02
Nb weld	C	3	6395	Q	35640	0.18
Nb weld to NbTi	D	4	5682	Q	27535	0.20
Ti weld to NbTi	E	5	4132	Q	32130	0.13
Ti weld	F	6	2276	Q	44100	0.05
Ti weld	G	7	4217	Q	73500	0.06
Nb weld	H	11	2796	Q	35640	0.08
Nb weld	I	9	12846	Q	35640	0.36
Nb weld	J	10	1634	Q	35640	0.05
Ti	K	-	31128	Q	73500	0.42
Ti weld	L	12	1324	Q	44100	0.03
Ti weld	M	8	1073	Q	44100	0.02

Table 15. Load Case 4 – Stress Results

Material	SCL	Weld #	Membrane Stress (psi)	Classification	Allowable Stress (psi)	Ratio S_{fe}/S_a
Nb weld	A	1	789	N/A	N/A	N/A
Nb weld	B	2	385	N/A	N/A	N/A
Nb weld	C	3	5465	N/A	N/A	N/A
Nb weld to NbTi	D	4	3573	N/A	N/A	N/A
Ti weld to NbTi	E	5	938	N/A	N/A	N/A
Ti weld	F	6	729	N/A	N/A	N/A
Ti weld	G	7	1337	N/A	N/A	N/A
Nb weld	H	11	728	N/A	N/A	N/A
Nb weld	I	9	6049	N/A	N/A	N/A
Nb weld	J	10	1646	N/A	N/A	N/A
Ti	K	-	3139	N/A	N/A	N/A
Ti weld	L	12	5926	N/A	N/A	N/A
Ti weld	M	8	2078	N/A	N/A	N/A

Material	SCL	Weld #	Membrane + Bending (psi)	Classification	Allowable Stress (psi)	Ratio S_{fe}/S_a
Nb weld	A	1	1160	Q	35640	0.03
Nb weld	B	2	850	Q	41580	0.02
Nb weld	C	3	6649	Q	35640	0.19
Nb weld to NbTi	D	4	4129	Q	27535	0.15
Ti weld to NbTi	E	5	3868	Q	32130	0.12
Ti weld	F	6	1194	Q	44100	0.03
Ti weld	G	7	4001	Q	73500	0.05
Nb weld	H	11	2125	Q	35640	0.06
Nb weld	I	9	14362	Q	35640	0.40
Nb weld	J	10	1696	Q	35640	0.05
Ti	K	-	47590	Q	73500	0.65
Ti weld	L	12	16744	Q	44100	0.38
Ti weld	M	8	2563	Q	44100	0.06

Table 16. Load Case 5 – Stress Results

Material	SCL	Weld #	Membrane (psi)	Classification	Allowable Stress (psi)	Ratio S_{fe}/S_a
Nb weld	A	1	83	P_m	11880	0.01
Nb	B	2	167	P_l	29700	0.01
Nb weld	C	3	457	P_m	11880	0.04
Nb weld to NbTi	D	4	272	P_m	7867	0.035
Ti weld to NbTi	E	5	171	P_m	9180	0.02
Ti weld	F	6	402	P_m	14700	0.03
Ti weld	G	7	660	P_m	24500	0.03
Nb weld	H	11	326	P_m	11880	0.03
Nb weld	I	9	410	P_m	11880	0.03
Nb weld	J	10	263	P_m	11880	0.02
Ti	K	-	2111	P_m	24500	0.09
Ti weld	L	12	980	P_l	22050	0.04
Ti weld	M	8	461	P_m	14700	0.03

Material	SCL	Weld #	Membrane + Bending (psi)	Classification	Allowable Stress (psi)	Ratio S_{fe}/S_a
Nb weld	A	1	256	P_m+P_b	17820	0.01
Nb	B	2	351	P_l+Q	59400	0.01
Nb weld	C	3	820	Q	35640	0.02
Nb weld to NbTi	D	4	728	P_m+P_b	11800	0.06
Ti weld to NbTi	E	5	630	P_m+P_b	13770	0.05
Ti weld	F	6	852	P_m+P_b	22050	0.04
Ti weld	G	7	2226	P_m+P_b	36750	0.06
Nb weld	H	11	335	P_m+P_b	17820	0.02
Nb weld	I	9	700	Q	35640	0.02
Nb weld	J	10	316	P_m+P_b	17820	0.02
Ti	K	-	4782	P_m+P_b	36750	0.13
Ti weld	L	12	4753	P_l+Q	44100	0.11
Ti weld	M	8	481	P_m+P_b	22050	0.02

Collapse Pressure

The criterion for protection against plastic collapse is given in Div. 2, 5.2.2. The criterion is applied to load cases in which primary (load-controlled) stresses are produced. For this analysis, this is Load Case 1, Load Case 2, and Load Case 5.

The following stress limits must be met (per 5.2.2.4(e)):

1. P_m = primary membrane stress $\leq$ S

2. P_l = primary local membrane stress $\leq$ 1.5 S
3. $P_l + P_b$ = primary local membrane + primary bending $\leq$ 1.5 S

where S = maximum allowable primary membrane stress.

In this work, the P_l classification is limited to SCL B (weld 2), and SCL L (weld 12). All other membrane stresses extracted on the SCLs are classified as the more conservative P_m, which is then used in place of P_l in 3) above.

Examining Tables 12, 13, and 16, it is found that the closest approach to the limiting stress for any load case occurs at SCL C (weld #3, the weld between the end disk flange and the end cell of the Nb cavity) in Load Case 1, where the primary membrane stress of 1655 psi compares to an allowable of 1740 psi. This weld is unusual in that it is intermittent azimuthally (an effect modeled in the analysis), which tends to concentrate the stresses near the middle of a line of weld. Also, the end disk flange is intended to stiffen the iris against axial motion only through the membrane stress in the weld, which means that any bending stresses are self-limiting and small rotations will satisfy the conditions that produce them. For this reason, the membrane stresses in this weld are classified as primary, while the bending stresses are secondary.

Ratcheting

Protection against ratcheting, the progressive distortion of a component under repeated loadings, is provided by meeting the requirements of Div. 2, 5.5.6. Specifically, the following limit must be satisfied:

$$\Delta S_{n,k} \leq S_{PS}$$

where: $\Delta S_{n,k}$ = primary plus secondary equivalent stress range
S_{PS} = allowable limit on primary plus secondary stress range

The stress range $\Delta S_{n,k}$ must take into account stress reversals; however, there are no stress reversals in normal operation of the cavity, so for this analysis $\Delta S_{n,k}$ is equal to the primary plus secondary stresses given in Tables 12-16.

Examination of the tables shows that the cavity satisfies the ratcheting criterion; the closest approach to the allowable primary plus secondary stress range limit occurs for Load Case 4 (gravity + liquid head + 60 psi + blade tuner extension + cool down) in the Ti bellows. For this load case, the calculated primary plus secondary stress range reaches 65% of the allowable.

Local Failure

The criterion for protection against local failure is given in Div. 2, 5.3.2:

$$\sigma_1 + \sigma_2 + \sigma_3 \leq 4S$$

where σ_1, σ_2, σ_3 are the principal stresses at any point in the structure, and S is the maximum allowable primary membrane stress (see Table 5), multiplied by a joint efficiency factor if applicable.

This criterion is assumed to be satisfied if the sum of the principal stresses calculated at every element centroid in the model meet the stress limit for the material.

Table 17 lists the maximum allowable sum of principal stresses for each material at each load case. These values are four times the full values given for maximum primary membrane stress times a joint efficiency for a Type 3 butt weld of 0.6. For those locations which are not near a joint, or are near one of the Type 2 butt weld joints, this is conservative.

The results for each material and each load case are given in Tables 18-20. The closest approach to the allowable limit occurs in the iris support ring welds for Load Case 1 (warm, 30 psi internal pressure), which reaches 0.93 of the allowable. For all other materials/load cases, the principal stress sum lies well below the allowable.

Table 17 – Maximum Allowable Sum of Principal Stresses

	Maximum Allowable Sum of Principal Stresses (psi)		
Load Case (Temp)	**Nb**	**TiNb**	**Ti**
1 (293 K)	**6960**	**36720**	**23232**
2 (1.88 K)	**47520**	**36720**	**58800**
3 (1.88 K)	**47520**	**36720**	**58800**
4 (1.88 K)	**47520**	**36720**	**58800**
5 (293 K)	**6960**	**36720**	**23232**

Table 18 – Local Failure Criterion - Niobium

Load Case	**Maximum Principal Stress Sum (psi)**	**Allowable Stress (psi)**	**Location**	**Ratio S_{fe}/S_a**
1	**6462**	**6960**	**weld #3**	**0.93**
2	**11182**	**47520**	**weld #3**	**0.24**
3	**27031**	**47520**	**weld #3**	**0.57**
4	**34170**	**47520**	**weld #3**	**0.72**
5	**1676**	**6960**	**weld #3**	**0.24**

Table 19 – Local Failure Criterion – Ti-45Nb

Load Case	Maximum Principal Stress Sum (psi)	Allowable Stress (psi)	Location	Ratio S_{fe}/S_a
1	3265	23232	weld #5	0.14
2	6361	36720	weld #5	0.17
3	7675	36720	weld #5	0.21
4	7651	36720	weld #5	0.21
5	1055	23232	weld #5	0.05

Table 20 – Local Failure Criterion – TiGr2

Load Case	Maximum Principal Stress Sum (psi)	Allowable Stress (psi)	Location	Ratio S_{fe}/S_a
1	12189	23232	bellows – SCL K	0.52
2	24329	58800	bellows – SCL K	0.41
3	38503	58800	bellows – SCL K	0.65
4	44584	58800	bellows– SCL K	0.76
5	4962	23232	Ti blade tuner flange	0.21

Buckling

Ti Shells and Bellows

The buckling of the Ti shells and bellows is addressed by Div. 1 rules in an earlier section of this report.

The Nb Cavity

The Code, Div. 1, does not contain the necessary geometric and material information to perform a Div. 1 calculation of Nb cavity collapse. Therefore, the procedures of Div. 2, Part 5, 5.4 “Protection Against Collapse from Buckling” are applied.

A linear elastic buckling analysis was performed with ANSYS. A design factor was applied to the predicted collapse pressure to give the maximum allowable external working pressure. This design factor, taken from 5.4.1.3(c) for spherical shells, is 16.
Only the cavity was modeled. The ends are constrained in all degrees of freedom to simulate the effect of attachment to the conical heads and Ti shells of the helium vessel.

The predicted buckled shape is shown in Figure 22. The critical pressure is 12450 psi. Applying the design factor gives this component a maximum allowable external working pressure of 778 psi, which is far greater than the required MAWP of 60 psi external.

The ANSYS buckling pressure seems large; as a check, a calculation of the collapse of a sphere of similar dimensions to those of a cell was done using a formula from Ref. 4. This calculation, given in Appendix B of this report, produces a similar result.

Conical Heads

The buckling pressure of the conical heads was calculated by the linear buckling approach used for the Nb cavity.

A model of the head only was made. It was constrained against axial motion where it connects to the Ti shell, but allowed to rotate freely, and translate radially.

The predicted buckling shape is shown in Figure 23. The critical buckling pressure is 3880 psi. Applying the design factor of 2.5 (from 5.4.1.3(b) for conical shells under external pressure) gives an MAWP for external pressure of 1550 psi, which is well above the actual maximum pressure of 15 psi.

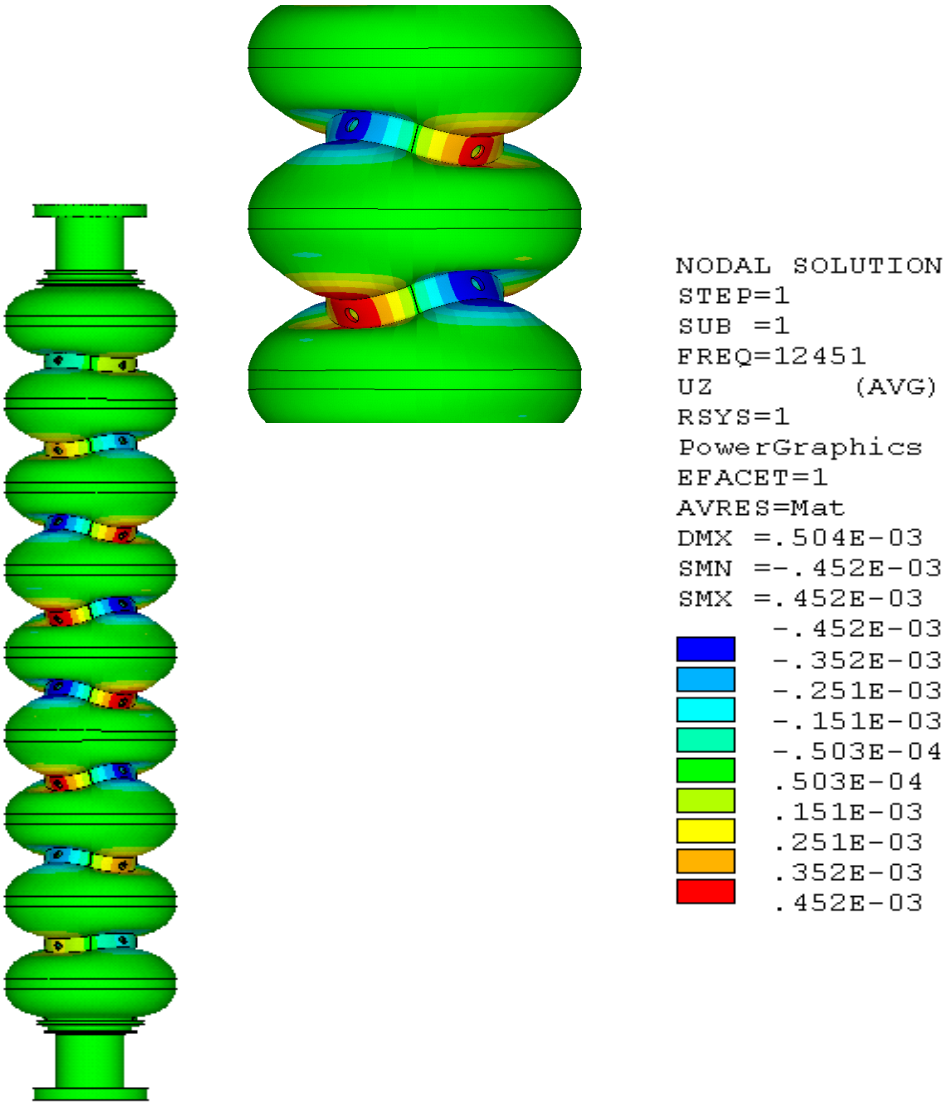

Figure 22. Lowest buckling mode of Nb Cavity (Pcr = 12450-psi)

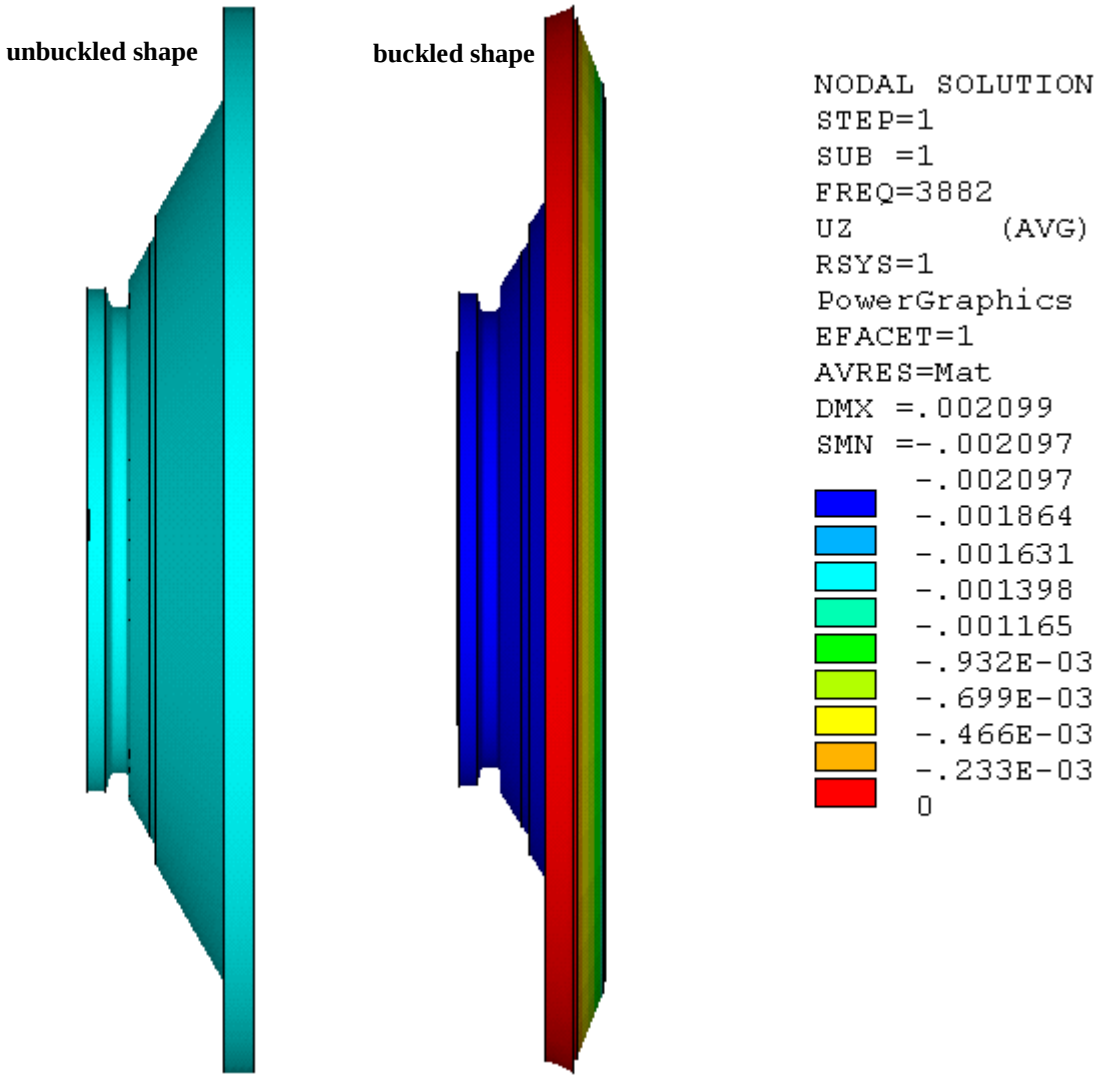

Figure 23. Buckling of conical head

Fatigue Assessment

The need for a fatigue analysis can be determined by applying the fatigue assessment procedures of Div. 2, Part 5, 5.5.2.3, "Fatigue Analysis Screening, Method A."

In this procedure, a load history is established which determines the number of cycles of each loading experienced by the Dressed SRF Cavity. These numbers are compared against criteria which determine whether a detailed fatigue analysis is necessary.

The load history consists of multiple cool down, pressurization, and tuning cycles. Estimates for the number of cycles of each load a cavity might experience are given in Table 21.

Table 21 – Estimated Load History of Dressed SRF Cavity

Loading	Designation	Number of Cycles
Cool down	$\mathbf{N_{\Delta TE}}$	**100**
Pressurization	$\mathbf{N_{\Delta FP}}$	**200**
Tuning	$\mathbf{N_{\Delta tuner}}$	**200**

The information of Table 21 is used with the criterion of Table 22 (a reproduction of Table 5.9 of Part 5) to determine whether a fatigue analysis is necessary.

The tuning load has no direct analog to the cycle definitions of Table 22. Therefore, it will be assigned its own definition as a cyclic load, $\mathbf{N_{\Delta tuner}}$, and treated additively.

For the Nb cavity, construction is integral, and there are no attachments or nozzles in the knuckle regions of the heads. Therefore, the applicable criterion is

$$\mathbf{N_{\Delta TE}} + \mathbf{N_{\Delta FP}} + \mathbf{N_{\Delta tuner}} \leq 1000$$

$$100 + 200 + 200 = 500 \leq 1000$$

The criterion is satisfied, and no fatigue assessment is necessary for the Nb cavity.

Table 22 – Reproduction of Table 5.9 of Part 5, "Fatigue Screening Criteria for Method A"

Description	
Attachments and nozzles in the knuckle region of formed heads	$N_{\Delta FP} + N_{\Delta PO} + N_{\Delta TE} + N_{\Delta T\alpha} \leq = 350$
All other components that do not contain a flaw	$N_{\Delta FP} + N_{\Delta PO} + N_{\Delta TE} + N_{\Delta T\alpha} \leq = 1000$
Attachments and nozzles in the knuckle region of formed head	$N_{\Delta FP} + N_{\Delta PO} + N_{\Delta TE} + N_{\Delta T\alpha} \leq = 60$
All other components that do not contain a flaw	$N_{\Delta FP} + N_{\Delta PO} + N_{\Delta TE} + N_{\Delta T\alpha} \leq = 400$

$N_{\Delta FP}$ = expected number of full-range pressure cycles, including startup and shutdown

$N_{\Delta PO}$ = expected number of operating pressure cycles in which the range of pressure variation exceeds 20% of the design pressure for integral construction or 15% of the design pressure for non-integral construction

$N_{\Delta TE}$ = effective number of changes in metal temperature difference between any two adjacent points

$N_{\Delta T\alpha}$ = number of temperature cycles for components involving welds between materials having different coefficients of thermal expansion that cause the value of $(\alpha_1 - \alpha_2)\Delta T$ to exceed 0.00034

Welds Between Ti Flanges and Ti Cylindrical Shells

The welds between the Ti blade tuner flange and the Ti cylindrical are structural support welds. The Code, Div. 1, Nonmandatory Appendix G, "Suggested Good Practice Regarding Piping Reactions and Design of Supports and Attachments" was applied to their analysis. This appendix states that supports should conform to good structural practice. As a guide to this practice, the Manual of Steel Construction is suggested[8]. Additional conservatism was applied by using the Code fillet weld joint efficiency of 0.55.

Figure 24 shows the location of the most highly stressed weld on the flange. Also shown is the coordinate system used to calculate weld stress.

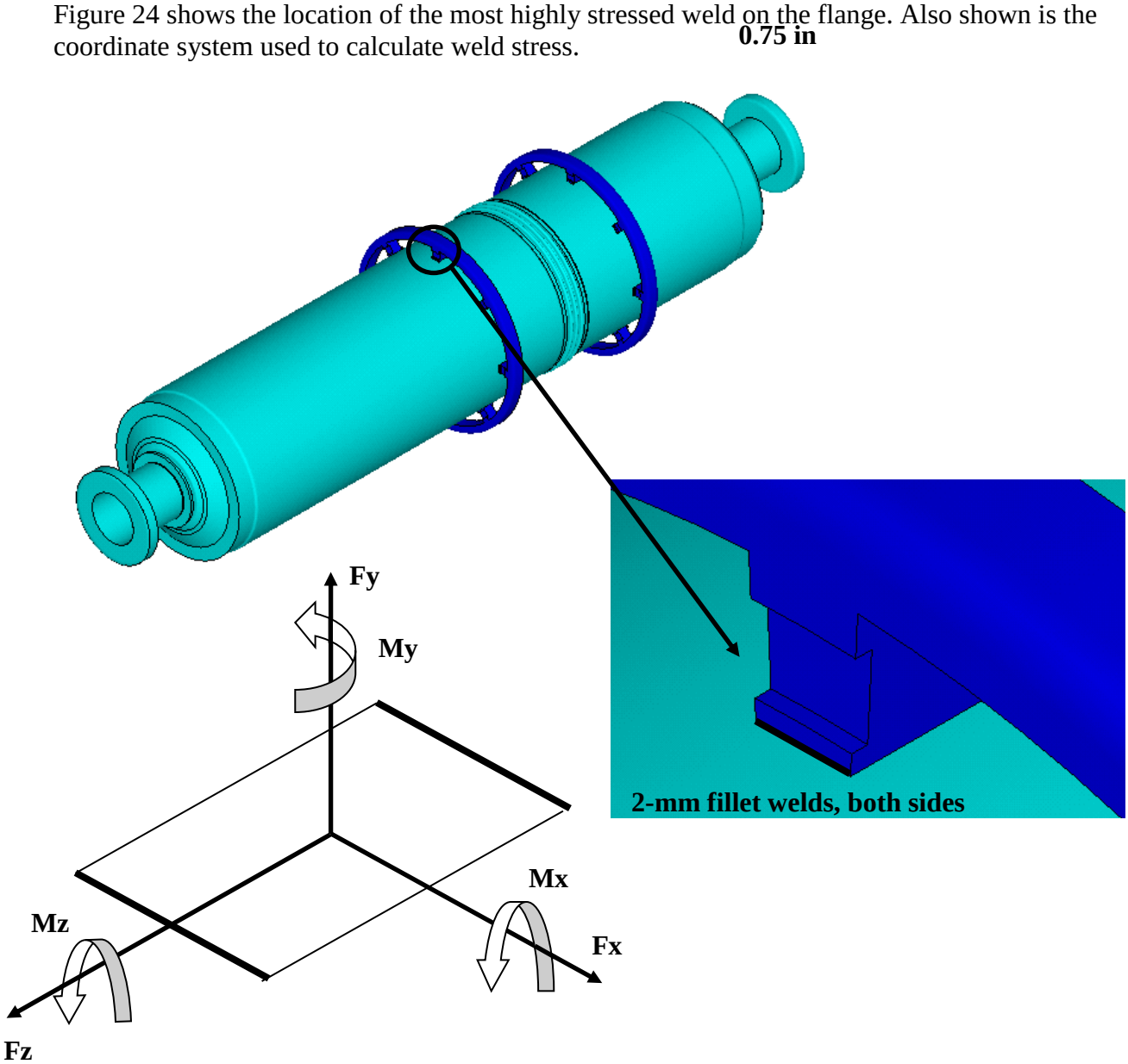

Figure 24. Location of most highly stressed weld on Ti flange and coordinate system for evaluation

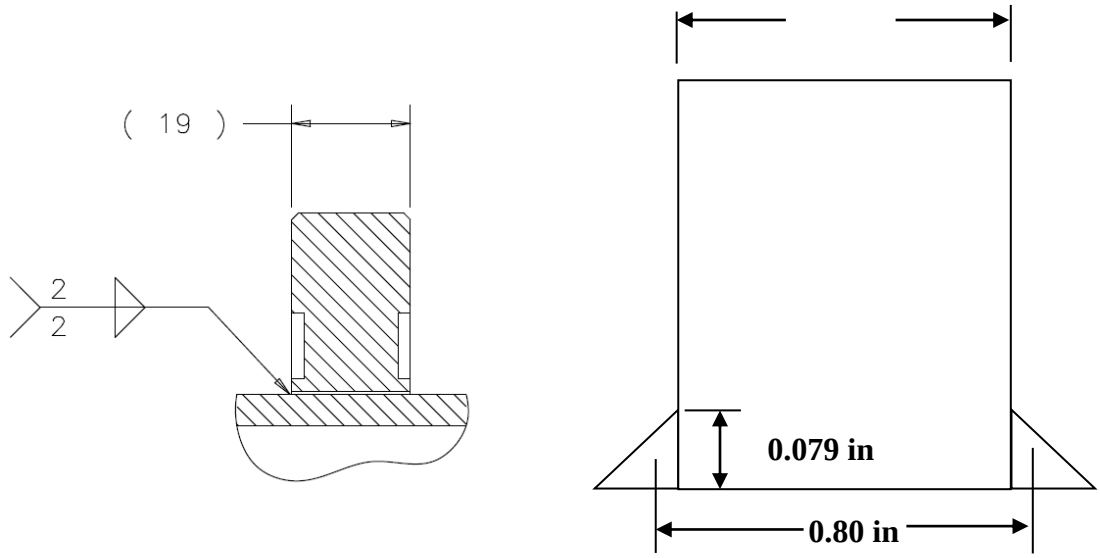

Figure 25. Weld detail and determination of distance between weld centroid (moment arm for Mx)

Due to the location (at the symmetry plane), there are no net My or Mz moments acting on the weld, and no net Fx force. Therefore, the only relevant loads on the welds are Fy, Fz, and Mx.

Figure 25 shows the weld detail, and the distance between weld centroids used to calculated the force components due to Mx.

The stress area of a 2 mm fillet weld, 0.5 inches long, is 0.028 in^2. The shear on a single weld was calculated by extracting Fy, Fz, and Mx from the nodal forces of the finite element model, calculating the maximum force acting on the weld (without regard to direction) and applying that force to the stress area.

Allowable shear stresses are calculated according to Ref. 5 as 0.4 times the yield stress of the base metal (in this case, Grade 2 Ti), with an additional 0.55 factor applied for joint efficiency.

Table 23 summarizes the results for the four load cases. The closest approach to the allowable stress limit occurs for Load Case 1, which is 30 psi warm pressurization.

Table 23 – Maximum Shear Stress in Ti flange Weld to Ti Cylindrical Shell

Load Case	Fy (lbs)	Fz (lbs)	Mx (in-lbs)	Shear Force (lbs)	Shear Stress (psi)	Allowable Stress (psi)
1	25	199	162	237	8522	8800
2	56	373	306	451	16163	26620
3	104	153	111	206	7389	26620
4	160	220	194	341	12244	26620

System Venting Verification

Summary

The 1.3-GHz Dressed SRF Cavity will be performance tested in the Horizontal Test Stand (HTS). For the helium system, there are two relief devices. The larger burst disk has a set pressure of 12-psig. A small check valve acts as an operational relief. For the RF cavity (beam) vacuum, there is a burst disk that ruptures at positive pressure. Table 24 lists information about each relief device.

Table 24 – Relief Devices in HTS

Type	System	Manufacturer	Model	Set Pressure	Flow Rate Capacity	Size
Warm and Cold MAWP Relief Valve						
Burst disk	Helium	BS&B	LPS	12-psig	2188-SCFM air	3.0-in.
Operational Relief Valves						
Check valve	Helium	Hylok	700 CV-5-F12N-25	5-psig	C_v=5.2	0.75-in.
Burst disk	Vacuum	MDC	BDA-M	1-psig		0.75-in.

The helium vessel is protected against various sources of pressure. Table 25 lists the pressure sources of the helium to the vessel, including sources that are addressed in the CGA S-1.3-2008 guideline [9]. The larger burst disk on the helium system (SV-H1) is sized to relieve any of these pressure sources.

Table 25 – Helium Vessel Pressure Sources

Helium Pressure Source	Maximum Flow Rate (g/sec)	Helium Temperature in Vent Line (K)	Required Capacity (SCFM-air)
Primary relief (CGA 6.2.2)		10	236
Fire relief (CGA 6.3.2)		10	1274
Warm helium supply from cryoplant	25	300	93
Cold helium supply from cryoplant	64	10	43
Loss of RF cavity (beam) vacuum (calculated using 4.0-W/cm^2)	2317	10	1568
Loss of insulating vacuum (calculated using 2.0-W/cm^2)	1992	10	1348

The helium supply maximum flow rates are provided by the engineering team for MDB [5, 10].

For the mass flow rates that are listed, the following equation is used for conversion to volumetric flow rate (SCFM-air): [11]

$$Q_a = \frac{13.1 * W * C_a}{60 * C} \sqrt{\frac{Z * T * M_a}{M * Z_a * T_a}}$$

Where:

W	Corrected mass flow rate of helium (divide the mass flow rate by 0.9 to size an ASME relief device)	lbm/hr
C_a	gas constant of air	
Z_a	compressibility factor of air	
T_a	air temperature at standard conditions	R
M_a	air molecular weight	
C	helium gas constant	
M	molecular weight of helium	kg/kmol
Z	compressibility factor of helium	
Q_a	volumetric flow rate	SCFM air

Venting System Description

Figure 26 shows the Piping and Instrumentation Diagram (P&ID) of the HTS system (drawing 4906.320-ME-440302) which contains the placement of the larger helium burst disk (SV-H1) and the vacuum (beam line) burst disk (SV-RF01). Table 26 is the complete component list for the HTS P&ID. Figure 27 shows drawing 5520.000-ME-440517 which shows the operational relief (SVH1) as well as the larger helium burst disk (SVHTC).

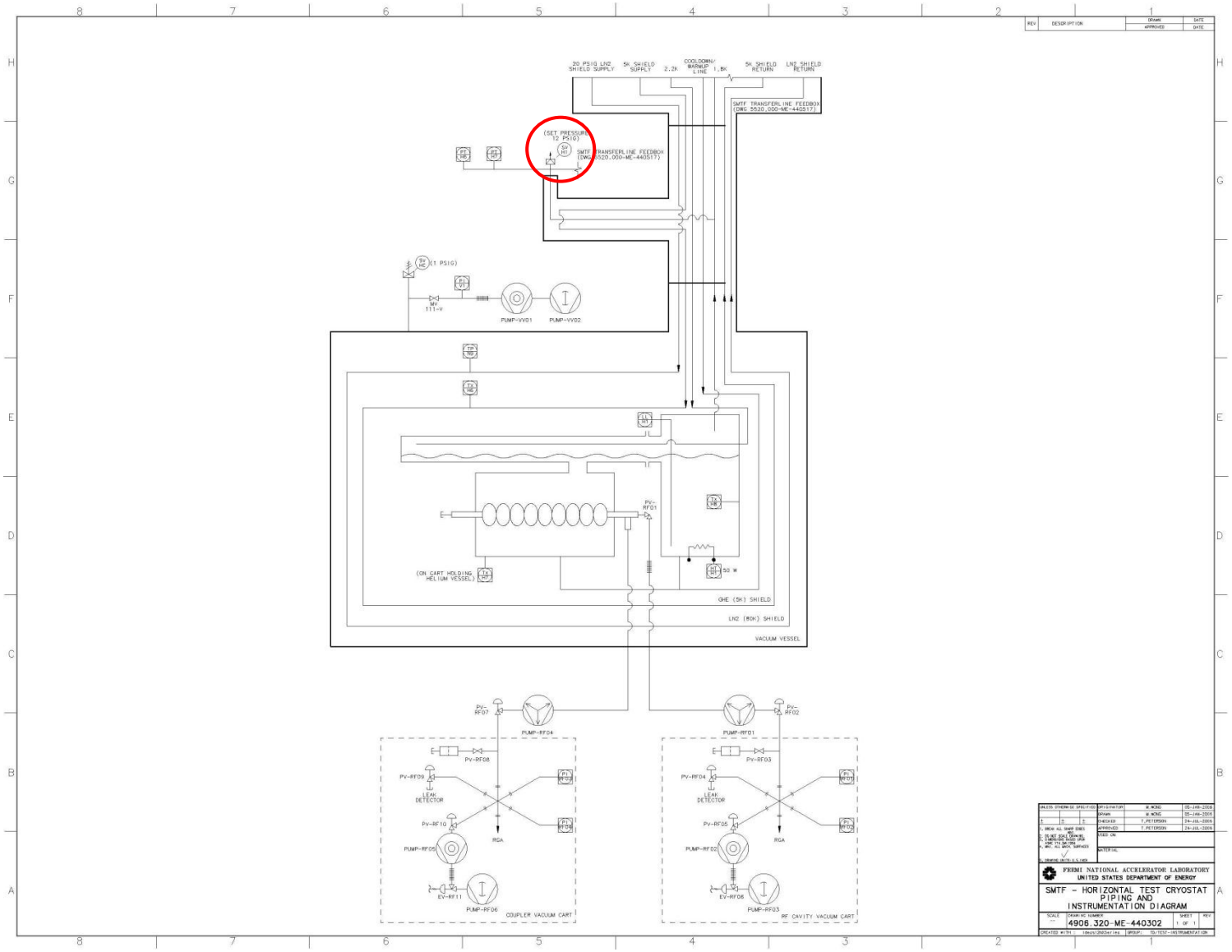

Figure 26. P&ID of Horizontal Test Stand (Drawing 4906.320-ME-440302)
Large helium burst disk shown (SV-H1)

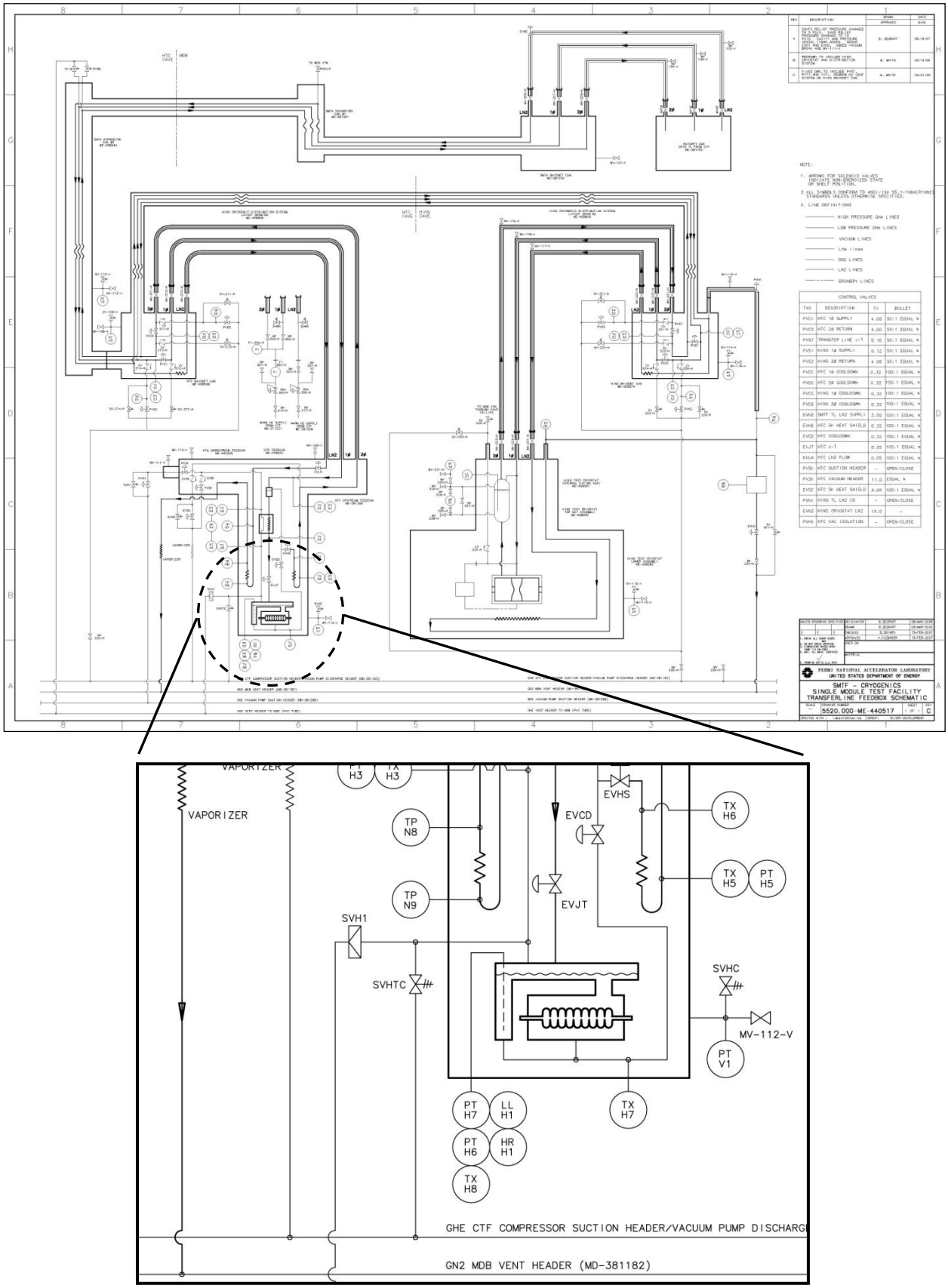

Figure 27. Single Module Test Facility (SMTF) P&ID (Drawing 5520.000-ME-440517) Operational check valve (SVHTC) shown along with 3" burst disk (SVH1)

Table 26 – Component List for Horizontal Test Stand (for P&ID drawing 4906.320-ME-440302)

Tag	ACCNET	APACS	Location	Type	Model	Company	Range	Readback
Instrumentation								
CALLH1	Z:CALLH1	SMTA_CALLH1	LHe level dewar	Liquid level sensor	12-inch active	AMI	0 -100 %	4-20 mA
CAPTV1	Z:CAPTV1	SMTA_CAPTV1	Cryostat insulating vacuum	Pressure transducer	ITR90 Ionivac	Leybold	3.75E-10 - 750 torr	0-10 V
CAPTH6	Z:CAPTH6	SMTA_CAPTH6	Helium pumping line	Pressure transducer (high range)	FPA	Sensotec	0-50 psia	4-20 mA
CAPTH7	Z:CAPTH7	SMTA_CAPTH7	Helium pumping line	Pressure transducer (low range)	230EA-00100BC	MKS	0-100 torr	4-20 mA
CAHTH1	Z:CAHTH1	SMTA_CAHTH1	LHe level dewar	Cartridge heater	E1J39	Watlow	120V-50W	I/O
CATPN9	Z:CATPN9	SMTA_CATPN9	80K Thermal shield	Platinum temperature sensor	PT102	Lake Shore	40 K-300 K	4-20 mA
CATXH6	Z:CATXH6	SMTA_CATXH6	5K Thermal shield	Cernox resistor temperature sensor	CX-1050-SD	Lake Shore	0.1K-300K	4-20 mA
CATXH7	Z:CATXH7	SMTA_CATXH7	Dressed RF cavity cart	Cernox resistor temperature sensor	CX-1050-SD	Lake Shore	0.1K-300K	4-20 mA
CATXH8	Z:CATXH8	SMTA_CATXH8	LHe level dewar	Cernox resistor temperature sensor	CX-1050-SD	Lake Shore	0.1K-300K	4-20 mA

Tag	ACCNET	APACS	Description / Location	Type	Model	Company	Range	Size
Valves								
CASVH1	--	--	Helium pumping line	Rupture disk	LPS	BS&B	Set point 12 psig @ 72 deg F	3-inch
CASVHC	--	--	Cryostat insulating vacuum	Fermi vacuum safety relief valve	1620-MB-106391	Fermilab	Set point 1 psig @ room temp	2.625-inch ID

Tag	ACCNET	APACS	Description / Location	Type	Model	Company	Pump Speed	Operating pressure
Vacuum Pumps								
PUMP-VV01	--	--	Cryostat insulating vacuum	Turbomolecular pump	ATP 80	Alcatel	80 L/sec	3.75E-9 torr
PUMP-VV01	--	--	Cryostat insulating vacuum	Roots pump	ACP 15	Alcatel	14 m^3/hr	3.7E-2 torr

Figures 28 and 29 show the helium pumping line that also serves as the helium venting line. The two-phase helium line of the 1.3-GHz Dressed SRF Cavity attaches directly to the piping in the HTS at the liquid level dewar assembly (part and drawing number 441780).

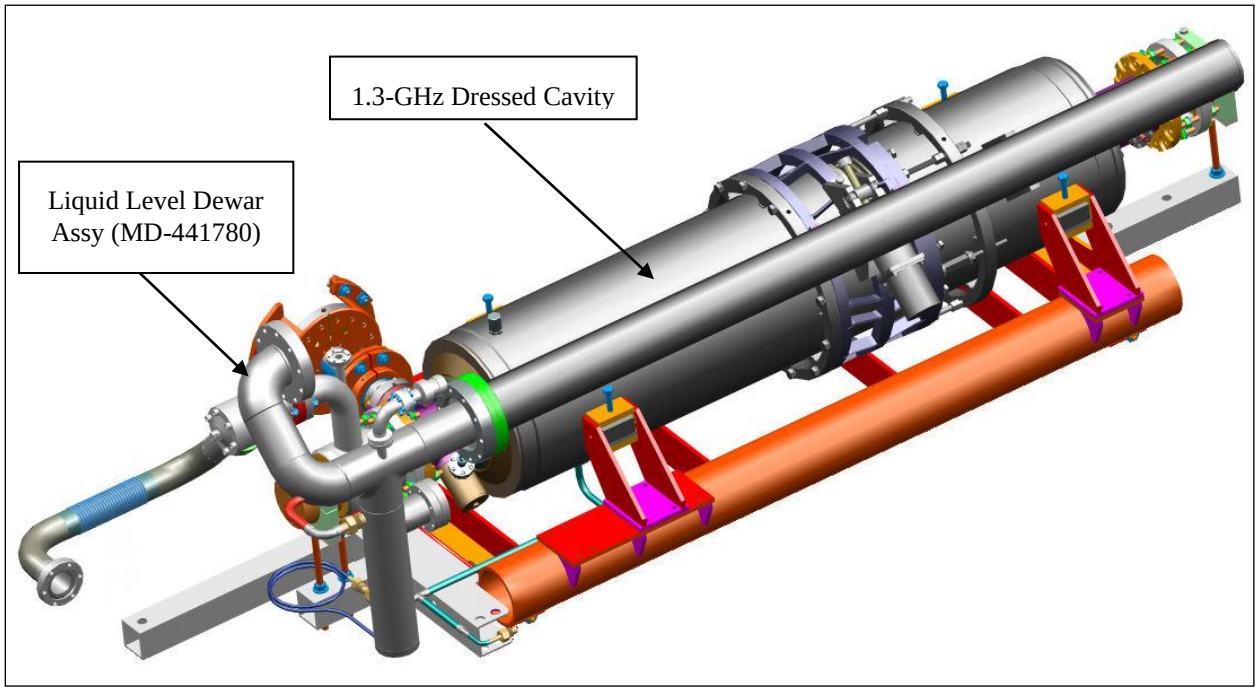

Figure 28. 1.3-GHz Dressed SRF Cavity and Liquid Level Dewar Assembly (MD-441780) Ready for Installation into HTS

The liquid level dewar assembly is connected to the flexhose assembly and hard piping that lead to the burst disk.

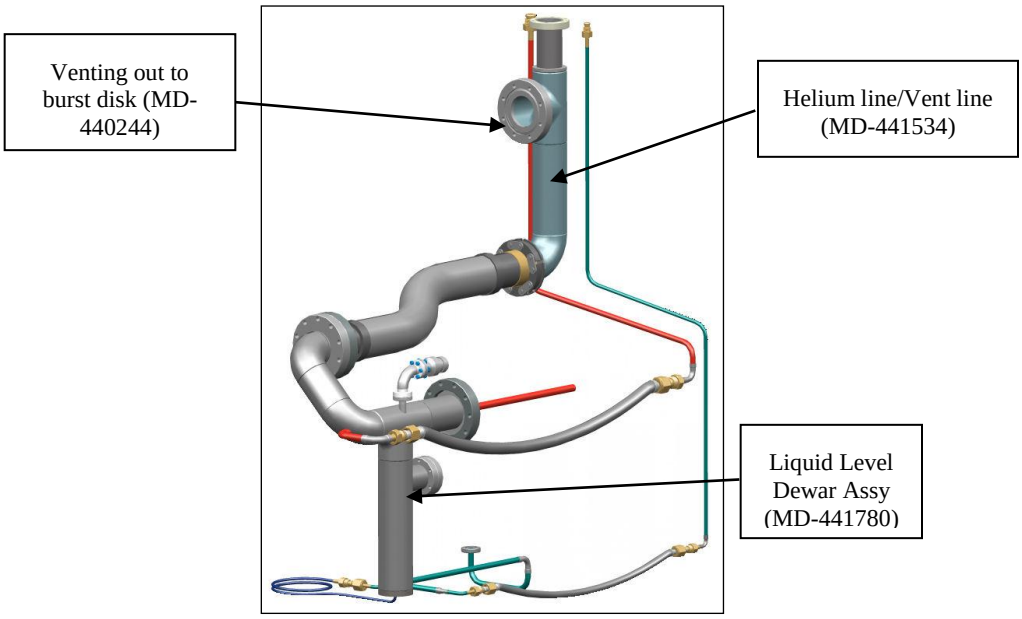

Figure 29. Helium pumping line which serves also as the large relief venting line

Figures 30-32 are photos of the helium vent header, which is depicted in the SMTF P&ID 440517 (Figure 27). The photos show the dimensions of the line.

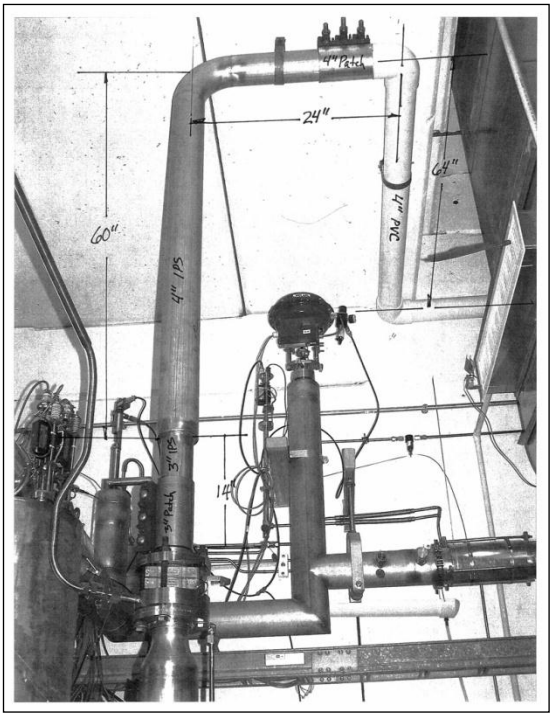

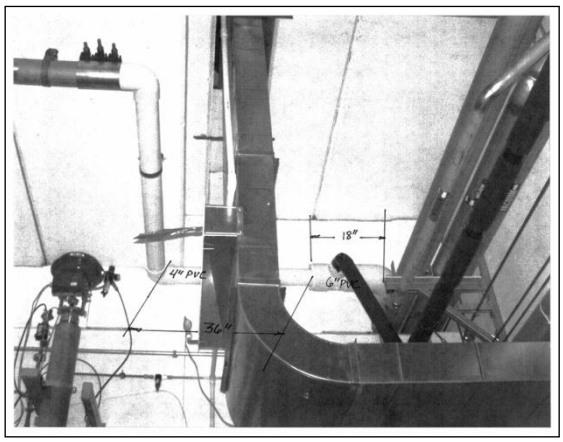

Figures 30-31. Photos of the vent piping for the horizontal test cryostat downstream of the rupture disk.

Figures 30 and 31 - The 4-inch pipe has a straight section of 184-inches long and four 90° elbows. The 4-inch section is a combination of steel and PVC components.
Figure 31 – The visible part of the 6-inch PVC pipe is 18-inches long

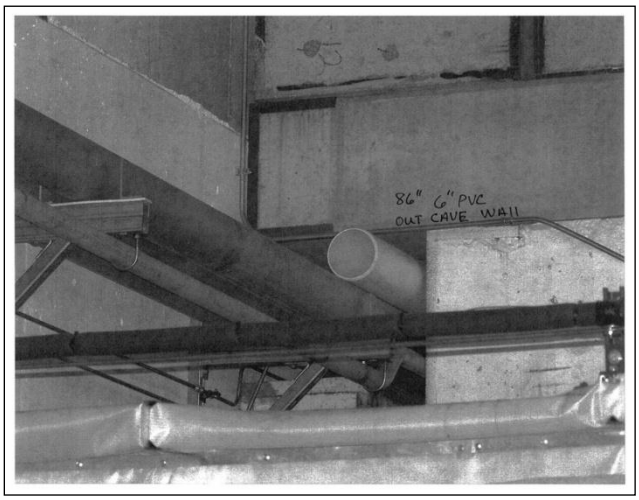

Figure 32. Vent piping exit outside the cave. The 6-inch PVC pipe is 86-inches long through the cave wall to discharge.

Detailed Calculations for the System Venting

Temperature of relief flow (CGA S-1.3—2008 paragraph 6.1.3)

The CGA specifies a temperature to calculate the flow capacities of pressure relief devices for both critical and supercritical fluids. The temperature to be used is determined by calculating the square root of fluid's specific volume and dividing it by the specific heat input at the flow rating pressure. The sizing temperature would be when this calculation is at a maximum. For the relief pressure of 12-psig, the temperature is 6.0°K. The temperature of 10.0°K is used as a conservative way to calculate the flow capacities and size the relief device.

Primary relief sizing (CGA S-1.3—2008 paragraph 6.2.2)

The required flow capacity for primary relief is calculated:

$$Q_a = \frac{(590 - T)}{4 * (1660 - T)} F * G_i * U * A$$

Where:

Q_a	primary relief flow capacity	236	SCFM air
T	helium temperature	18	°R
F	correction factor for cryogenic systems	1	
U	overall heat transfer coefficient of insulating material	0.779	Btu/(hr-ft^2-°F)
G_i	gas factor for insulated containers of liquid helium	52.5	
A	arithmetic mean of the inner and outer surface areas of insulation	66.3	ft^2

Fire relief sizing (CGA S-1.3—2008 paragraph 6.3.3)

The required flow capacity for fire relief is calculated

$$Q_{a_fire} = F * G_i * U * A^{0.82}$$

Where:

Q_{a_fire}	primary relief flow capacity	1274.2	SCFM air
F	correction factor for cryogenic systems	1	
U	overall heat transfer coefficient of insulating material	0.779	Btu/(hr-ft^2-°F)
G_i	gas factor for insulated containers of liquid helium	52.5	
A	arithmetic mean of the inner and outer surface areas of insulation	66.3	ft^2

Secondary relief sizing – Loss of RF Cavity (Beam) Vacuum and Loss of Insulating Vacuum

The secondary relief requirement considers two independent scenarios in calculating the helium boil-off: helium vaporization due to the loss of RF cavity (beam) vacuum and helium vaporization due to the loss of insulating vacuum. The helium boil-off during the loss of RF cavity vacuum is calculated based on the total surface area of the RF cavity, which is 1302-in^2 (0.84-m^2). For a loss of cavity vacuum due to an air leak, the heat flux of 4.0-W/cm^2 is used [(12)]. For helium at the relief pressure of 12.0-psig, the heat absorbed per unit mass of efflux, equivalent to a latent heat but including the effect of significant vapor density is 14.5-J/g. The maximum mass flow rate can be calculated:

$$\dot{m}_{RF_cavity} = \frac{A_{cavity} * Q}{LH}$$

Where

m_{RF_cavity}	Mass flow rate	2317	g/sec
A_{cavity}	Total surface area of RF cavity	0.84	m^2
		8400	cm^2
LH	Effective latent heat @ 5K (maximum specific heat input for 12-psig)	14.5	J/g
Q	Heat efflux due to air leak into cavity	4	W/cm^2

The helium boil-off during the loss of insulating vacuum is calculated based on the total surface

area of the cold mass. The cold mass includes the total surface area of the helium vessel and the associated piping leading to the burst disk. The total uninsulated surface area (including the helium vessel and part of the piping) is 15,027-cm^2 and the total insulated surface area is 2027-cm^2. (The detailed list of components in the cold mass with their surface areas is shown in Table 27) The heat efflux for a superinsulated vacuum vessel with an uninsulated helium vessel is 2.0-W/cm^2 and 0.6 for insulated piping is 0.6-W/cm^2 [13, 14]. So the total mass flow rate due to loss of insulating vacuum is 2157-g/sec. So, in the HTS, the loss of RF cavity vacuum results in a higher mass flow rate of vaporized helium.

Table 27 – Surface area for the cold mass, including the helium vessel and the piping leading to the burst disk

Uninsulated items - Assembly Number and Name	Part Name	Drawing Number	SA of flow path (in^2)
872825: G3 Helium Vessel RF Cavity Assy	(Helium vessel boundary)	87285	1550.0
	Helium line		370.0
MD-441523: 3.9GHz Liquid Level Dewar Assy	Helicoflex Flange	MA-441524	7.2
	Pipe, 2 Sch 10 x 3.5"LG	MD-441523, Item 2	23.7
	Modified Tee	MB-441525	33.9
	Modified Elbow	MB-441526	21.5
	90` Elbow, 2" Sch 10, SR	MD-441523, Item 8	21.3
	Pipe, 2" Sch 10 x 0.5"LG	MD-441523, Item 9	3.4
	Helicoflex Flange	MA-441524	7.2
	Bottom pipe	MB-441527	67.2
	Bottom cap	MB-441529	4.4
MB-441533: Flexhose Subassy	Helicoflex Flange	MA-441524	7.2
	Flexhose	MB-441025	113.9
	Helicoflex Flange	MA-441524	7.2
MC-441534: Pumping Line Weldment	Helicoflex Flange	MA-441524	7.2
	Elbow, 2" Sch 10, SR	MC-441534, Item 2	21.3
	Pipe, 2" Sch 10 x 6.3"LG	MC-441534, Item 3	42.6
	Tee, 2" Sch 10	MC-441534, Item 4	20.0
	Total Surface Area of Uninsulated Cryostat Helium Return Line (in^2)		2329.2
		(cm^2)	15026.8
Insulated items - Assembly Number and Name	**Part Name**	**Drawing Number**	**SA of flow path (in^2)**
MD-440244: Helium Relief Subassy	Modified Conflat Flange	ME-440245	2.0
	Pipe, 2 Sch 10 x 12.4"LG	ME-426450, Item 2	84.0
	90` Elbow, 2" Sch 10, SR	ME-426450, Item 3	21.3
	Pipe, 2 Sch 10 x 5"LG	ME-426450, Item 2	33.9
	Flexhose Assy	MB-440246	86.0
	Pipe, 2 Sch 10 x 4.25"LG	ME-426450, Item 2	28.8
MD-481254: Helium Relief Check Valve Bypass	Tee, 2" Sch 10 & Pipe, 2 Sch 10 x 8.12" LG	MD-481254, Items 2,5	58.1
	Total Surface Area of Insulated Cryostat Helium Return Line (in^2)		314.1
		(cm^2)	2026.6

Pressure drop through the vent line

To ensure that the burst disk has been adequately sized, the pressure drop through the vent line is calculated. Assume that the burst disk has been ruptured. The total pressure drop is calculated by dividing the entire vent line into shorter sections and calculating the pressure drop in each section, adjusting the helium properties along the vent line. The inlet pressure of the vent line is the Dressed SRF Cavity's cold MAWP of 4-bar. The pressure at the exit of the vent line must be larger than atmospheric pressure, confirming in a conservative way that there is enough helium flow to push through the vent line.

For the pressure drop calculations described in this amendment, all equations come from Crane's

Flow of Fluids Handbook.[15] For the entire vent line, the equation that is used is:

$$\Delta P = 2.8E^{-7} * \frac{K * W}{\rho * d^4}$$

Where ΔP = pressure drop (psi)
K = the resistance coefficient of the section
W = maximum mass flow rate = 2317/0.9 = 2575-g/sec = 20438-lbm/hr
V = helium specific volume (ft^3/lbm)
d = flow diameter = 2.16-inch

The pressure drop through the vent line is calculated for helium at 10°K. The flow resistance value for each section is ultimately calculated in terms of one diameter, which is the 2.16-inch diameter. For straight sections of pipe, the friction factor was determined using the chart titled "Friction Factors for Clean Commercial Steel Pipe" in Crane. It is noted that PVC pipe, which is used downstream of the burst disk, is nominally smoother than steep pipe.

The following tables show the pressure drop calculations for each section. Table 28a lists the helium properties and the friction factor calculations for each section. Table 28b shows the resistance factor and pressure drop calculations. If the inlet helium pressure at the vessel (the entrance to the vent line) is 4-bar at 10.0°K, then the final pressure at discharge is calculated to be 1.08-bar. Since the pressure at discharge is actually 1.0-bar, the maximum helium vessel pressure will not reach 4.0-bar.

Note that the pressure drop calculations reflect the modification in the helium vent line that was installed in June, 2010. The vent line leading up to the 12-psig rupture disk was extended in length. The extension resulted in an increased pressure drop of 0.3-bar.

Table 28a – Helium Properties and Friction Factors for Each Section

Mass flow rate helium		2317.241	g/sec
Adjusted mass flow rate		2574.713	
(divide by 0.9)		20438.1	lbm/hr
At vessel			
	Helium temperature	9	K (assume constant through entire vent line)
	Helium pressure	4.00	bar
	Helium absolute viscosity	2.38E-03	cP
	Helium specific volume	3.97E-02	m^3/kg
		0.64	ft^3/lbm
	Pressure drop at entrance into pipe	0.24	bar
Through 2.16-inch pipe			
	Pressure at pipe inlet	3.76	bar
	Helium absolute viscosity	2.36E-03	cP
	Helium specific volume	4.27E-02	m^3/kg
		0.68	ft^3/lbm
	d_2-16	2.16	inch
	Re_2-16	2.53E+07	(for 2.16-inch diameter pipe)
	f_2-16	0.019	(for 2.16-inch diameter pipe)
Through 2.00-inch flexhose			
	Pressure at pipe inlet	3.45	bar
	Helium absolute viscosity	0.0023257	cP
	Helium specific volume	0.047255	m^3/kg
		0.76	ft^3/lbm
	d_2	2.00	inch
	Re_2	2.71E+07	(for 2-inch diameter pipe)
	f_2	0.019	(for 2-inch diameter pipe)
Through 2.16-inch pipe			
	Pressure at pipe inlet	3.12	bar
	Helium absolute viscosity	2.29E-03	cP
	Helium specific volume	5.30E-02	m^3/kg
		0.85	ft^3/lbm
	d_2-16	2.16	inch
	Re_2-16	2.60E+07	(for 2.16-inch diameter pipe)
	f_2-16	0.019	(for 2.16-inch diameter pipe)
	Pressure at pipe inlet	2.62	bar
	Helium absolute viscosity	2.25E-03	cP
	Helium specific volume	6.44E-02	m^3/kg
		1.03	ft^3/lbm
	d_2-16	2.16	inch
	Re_2-16	2.66E+07	(for 2.16-inch diameter pipe)
	f_2-16	0.019	(for 2.16-inch diameter pipe)
Through 3.00-inch pipe			
	Pressure at pipe inlet	1.88	bar
	Helium absolute viscosity	0.0021779	cP
	Helium specific volume	0.092216	m^3/kg
		1.48	ft^3/lbm
	d_3-26	3.26	inch
	Re_3-26	1.82E+07	(for 3-inch diameter pipe)
	f_3-26	0.017	(for 3-inch diameter pipe)
Through 4.00-inch pipe			
	Pressure at pipe inlet	1.66	bar
	Helium absolute viscosity	0.0021577	cP
	Helium specific volume	0.10567	m^3/kg
		1.69	ft^3/lbm
	d_4-26	4.26	inch
	Re_4-26	1.40E+07	(for 4-inch diameter pipe)
	f_4-26	0.016	(for 4-inch diameter pipe)
Through 6.00-inch pipe			
	Pressure at pipe inlet	1.48	bar
	Helium absolute viscosity	2.14E-03	cP
	Helium specific volume	0.11937	m^3/kg
		1.91	ft^3/lbm
	d_6-357	6.357	inch
	Re_6-357	9.47E+06	(for 6-inch diameter pipe)
	f_6-357	0.015	(for 6-inch diameter pipe)

Table 28b – Resistance Factors and Pressure Drops in Each Section

Beta = smaller diameter / larger diameter
Ratio = reference diameter (2.16) / actual or downstream diameter

	K	K*Ratio^4	L (inch)	d (inch)	fT	r	r/d	K_R	Beta	Ratio	Assume T=9°K at each section Total K for section	Helium pressure (bar)	Helium specific volume (ft^3/lbm)	Pressure drop (psi)	Pressure drop (bar)
Piping within HTC											Vent line on vessel - entrance	4.00	0.636	3.42	0.24
Entrance into vent pipe	1.00	1.00								1.00	1.00				
Vessel supply pipe	0.13	0.13	14.49	2.16						1.00	Vent line on vessel - run to dewar	3.76	0.684	0.71	0.05
Vent line to LL dewar	0.07	0.07	7.60	2.16						1.00	0.19				
Thru LL dewar											Vent line through LL dewar 1	3.72	0.694	1.50	0.10
straight run	0.03	0.03	3.80	2.16						1.00	0.40				
tee thru	0.37	0.37		2.16	0.0185					1.00	Vent line through LL dewar 2				
2-90 deg bends	0.57	0.57		2.16	0.0185	2.3	1.06			1.00	0.59	3.61	0.717	2.28	0.16
straight run	0.02	0.02	2.40	2.16						1.00					
Sudden contraction	0.18	0.18							0.93	1.00	Flexhose				
Flexhose assy	0.98	1.33	102.80	2.00						1.08	1.18	3.45	0.757	4.82	0.33
Sudden expansion	0.03	0.03							0.93	1.00					
Pumping line weldment											Components of pumping line weldment				
helicoflex flange	0.01	0.01	1.20	2.16						1.00	0.44	3.12	0.849	1.99	0.14
90 deg bend	0.37	0.37		2.16	0.0185	2	0.93			1.00	1.11	2.98	0.893	5.32	0.37
straight run	0.06	0.06	6.30	2.16						1.00					
tee branch	1.11	1.11		2.16	0.0185					1.00					
Helium vent line branch											Components of helium vent line branch				
straight run	0.12	0.00	13.10	2.16							1.36	2.62	1.031	7.56	0.52
90 deg bend	0.37	0.37		2.16	0.0185	2	0.93			1.00	0.45	2.10	1.318	3.17	0.22
straight run / flexhose line	0.51	0.51	57.88	2.16						1.00					
tee thru	0.37	0.37		2.16	0.0185					1.00					
Expansion 2 to 3-inch	0.45	0.45							0.72	1.00					
3-inch diameter piping											Cmpts of 3-in diameter piping				
BS&B LPS burst disk	0.79	0.21		3.00				0.79		0.72	0.21	1.88	1.477	1.69	0.12
Explansion 3 to 3.26-inch	0.03	0.01							0.92	0.72					
Straight run	0.38	0.07	72.00	3.26						0.66	0.08	1.76	1.585	0.69	0.05
Expansion 3 to 4-inch	0.50	0.10							0.77	0.66	0.10	1.71	1.645	0.85	0.06
4-inch diameter piping											Cmpts of 4-in diameter piping				
Straight run	0.69	0.05	184.00	4.26						0.51	0.27	1.66	1.693	2.47	0.17
90 deg elbow	0.48	0.03		4.26						0.51					
90 deg elbow	0.48	0.03		4.26						0.51					
90 deg elbow	0.48	0.03		4.26						0.51					
90 deg elbow	0.48	0.03		4.26						0.51					
Expansion 4 to 6-inch	1.51	0.10							0.67	0.51					
6-inch diameter piping											Discharge line to atmosphere				
Straight run	0.25	0.00	104.00	6.36						0.34	0.02	1.48	1.912	0.17	0.01
Exit	1.00	0.01								0.34					
											Final pressure at discharge as calc.	1.47	(bar)	Press drop (bar)	2.53

Welding Information

The weld characteristics were introduced earlier in this document in the sub-section titled "Welds" in the "Design Verification" section. As stated earlier, welds are produced by either the electron-beam process or the tungsten inert gas (TIG) process. All welds on the Dressed SRF Cavity are designed as full penetration butt welds. All welds are performed from one side, with the exception of the Ti-45Nb to Ti transition welds. Those welds are performed from two sides. No backing strips are used for any welds. Table 29 summarizes the welds, including the drawing, materials joined, weld type, and how the weld was qualified. Figure 33 shows the location of the welds on the vessel.

Table 29 – Weld Summary for RI-018

Weld	Weld Description	Drawing & Reference	Materials Joined	Weld Type	Weld Qualification
1	End Tube Spool Piece to End Cap Flange	MD-439178	Nb-Nb	EB	Welded at AES
2	End Tube Spool Piece to RF Half Cell	MD-439178	Nb-Nb	EB	Welded at AES
3	End Cap Flange to RF Half Cell	MD-439178	Nb-Nb	EB	Welded at AES
4	End Cap Flange to End Cap Disk	MD-439178	Nb-Ti45Nb	EB	Welded at AES
5	End Cap Disk to Transition Ring	MD-439180 MD-440003	Ti45Nb-Ti	EB	Welded at AES
6	1.3GHz 9 Cell RF Cavity (Transition Ring) to Cavity-Vessel Adapter Ring	872825	Ti-Ti	TIG	Welded at FNAL. WPS, PQR, WPQ for Procedure No. TI-1 and TI-6.
7 (FB End)	Cavity-Vessel Adapter Ring to G3 Helium Vessel Assembly	872825	Ti-Ti	TIG	Welded at FNAL. WPS, PQR, WPQ for Procedure No. TI-1 and TI-6.
7 (Coupler End)	G3 Helium Vessel Assembly to 1.3GHz 9 Cell RF Cavity	872825	Ti-Ti	TIG	Welded at FNAL. WPS, PQR, WPQ for Procedure No. TI-1 and TI-6.
8	Bellows Assembly to Tube	812815, X-Ray Report	Ti-Ti	TIG	Welded at Hi-Tech. WPS, PQR, WPQ.
9	Support Ring to Half Cell	MC-439172	Nb-Nb	EB	Welded at AES
10	Dumbbell to Dumbbell	MD-439173	Nb-Nb	EB	Welded at AES
11	Half Cell to Half Cell	MC-439172	Nb-Nb	EB	Welded at AES
12	Bellows Convolutions to Weld Cuff	844575	Ti-Ti	TIG	Welded at Ameriflex. WPQ.
13	Seam Welds of Helium Tubes	812995, 813005, X-Ray Report	Ti-Ti	TIG	Welded at Hi-Tech. WPS, PQR, WPQ.
14	2-phase pipe stube to helium vessel	812765, X-Ray Report	Ti-Ti	TIG	Welded at Hi-Tech. WPS, PQR, WPQ. Final weld was radiographed (weld W1 in x-ray report).

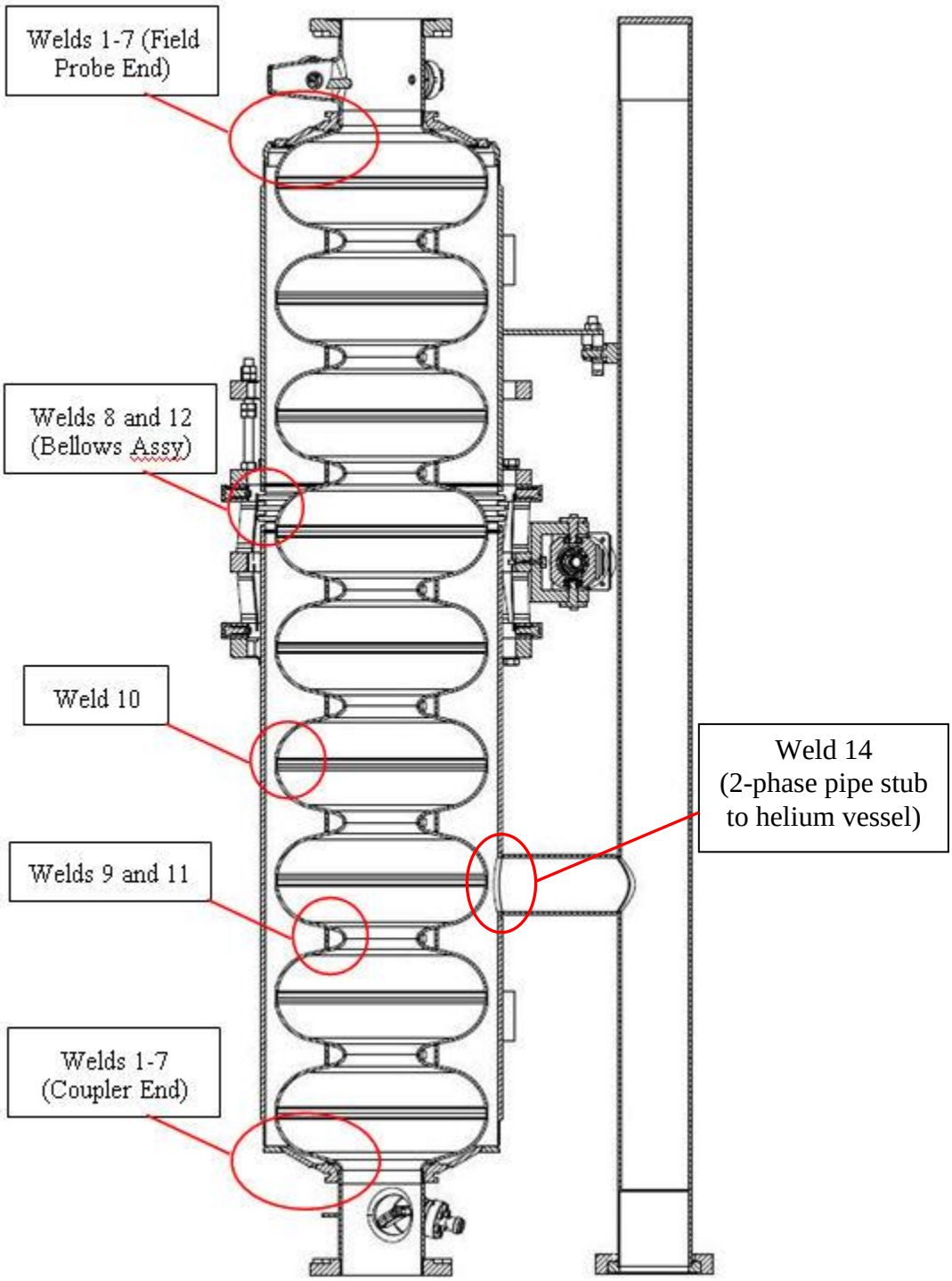

Figure 33. Weld Locations, as numbered in Table 28

According to the Code, the welds must follow certain guidelines. Table 30 summaries the weld guideline, the paragraph in the Code which addresses the weld guideline, and how the weld does not follow the guideline. To accommodate for the exceptions, in the analysis of the design, the joint efficiency is at least 0.6, which is typical for a weld that is not radiographed (see Table 4).

Table 30 – Weld Exceptions to the Code

Weld Guideline	Code Paragraph	Exception to the Code	Explanation
Electron beam welds in any material must be ultrasonically examined along the entire length.	UW-11(e)	No ultrasonic examination was performed.	In the analysis, the joint efficiency is at least 0.6, as if the weld is not radiographed (see Table 3).
Category A and B Ti welds must be either Type 1 or Type 2 butt welds.	UNF-19(a)	Some Category B welds are Type 3.	In the analysis, the joint efficiency is at least 0.6, as if the weld is not radiographed (see Table 3).
All Ti welds must be examined by the liquid penetrant method.	UNF-58(b)	No liquid penetrant testing was performed.	In the analysis, the joint efficiency is at least 0.6, as if the weld is not radiographed (see Table 3).
Category A and B welds Ti welds must be fully radiographed.	UNF-57(b)	Seam weld did not conform when radiographed. Seam weld was radiographed after tube was rolled but not after final vessel assembly.	In the analysis, the joint efficiency is at least 0.6, as if the weld is not radiographed (see Table 3).
The welds of a bellows expansion joint must be examined by the liquid penetrant method.	26-11	No liquid penetrant testing was performed.	In the analysis of the seam weld, the joint efficiency is at least 0.6, as if the weld is not radiographed.

Three welds are performed at Fermilab (welds 6-7 in Table 29). They are the final closure welds that bring the titanium helium vessel and the niobium RF cavity together to make the complete assembly. According to the Technical Appendix in the FESHM 5031 on Welding Information:

"Welding executed at Fermilab shall be done in a manner equivalent to a generic welding procedure specified and qualified under the rules of the A.S.M.E. Boiler and Pressure Vessel Code Section IX. The system designer of an in-house built vessel shall provide a statement from the welding supervisor or his designee certifying the welding was observed and accomplished in accordance to the specified generic welding procedure by a qualified welder and shall attach a copy of the welder's identification to the statement."

The Code Section IX requires three documents that specify and qualify a weld procedure and certify a welder. These documents are the Welding Procedure Specification (WPS), the Procedure Qualification Record (PQR), and the Welder/Welding Operator Performance Qualifications (WPQ). For the titanium closure welds that are completed at Fermilab, namely

welds 6-7 in Table 29, the relevant documents are titled “TI-1” and “TI-6”.

All other welds were performed at vendors outside Fermilab. Any available documentation and inspection results are explained in the following paragraphs.

For the niobium cavity electronic beam (EB) welding that took place at AES (welds 1-5, 9-11), no welding documents are available. The process is proprietary. How the welds and welders are qualified are not known other than what is specified in the engineering drawings. The quality assurance for the niobium cavity is its RF performance. The RF performance is an indirect way of proving full penetration welds because if the weld is not full penetration, the RF performance is not acceptable.

For the bellows assembly, a single weld holds the bellows convolution to the weld cuff at each end (weld 12 in Table 29). The bellows assembly was made at Ameriflex. A WPQ is available.

The titanium helium vessel assembly was manufactured at Hi-Tech, who provided the WPS, PQR, and WPQ weld documents. All of the final welds (including welds 8, 12-14) were radiographed (x-rayed).

A detailed procedure, titled “1.3GHz Cavity Welding to Helium Vessel” lists all of the manufacturing steps that are taken for dressing a bare cavity after vertical testing in preparation for horizontal testing.

All x-ray results are available online at

http://ilc-dms.fnal.gov/Workgroups/CryomoduleDocumentation/RI-018 /

All other documents that are discussed in the Welding Information section are available online at the following location:

http://ilc-dms.fnal.gov/Workgroups/CryomoduleDocumentation/ACC013/weld-docs/

Regarding the seam weld in the titanium vessel, a full explanation about its history and current status is provided in Appendix E - Supplemental Information Regarding the Titanium Vessel Longitudinal Weld.

Anomolous Welds

<u>Weld between Ti cylindrical shell and pipe at 2.16 in dia. penetration (2-phase pipe stub)</u>

The weld at the 2.16 in penetration in the Ti cylindrical shell has been shown to require no additional reinforcement "other than that inherent in the construction." However, this assumes that the weld between the cylindrical shell and the pipe which attaches at the penetration is a Code weld; as we do not have a Code weld, the question of whether this affects the reinforcement "inherent" in the construction must be examined.

The actual attachment weld is a single fillet weld, as shown in Figure 34 below.

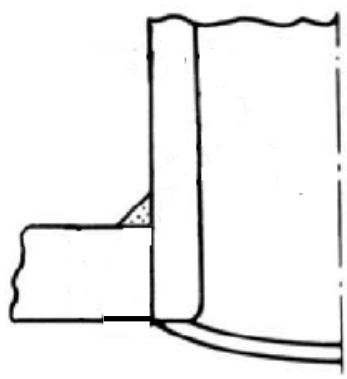

Figure 34. Single-sided fillet weld – non-Code

This type of unsupported single fillet weld is not allowed by the Code; however, a single fillet weld is permitted if the fillet weld occurs on the inner surface of the cylindrical shell (Figure 35).

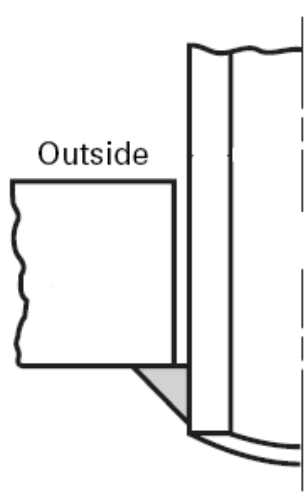

Figure 35. Single-sided fillet weld – Code

From the perspective of "inherent" strength of reinforcement, the location of the single fillet weld is unimportant; therefore, the argument that the penetration requires no additional reinforcement is still valid.

The attachment weld can be sized assuming that the only load it must resist is the pressure load, which tends to shear fillet weld. (No side loads or other incidental loads have been identified).

The force produced at the maximum pressure of 60 psi is

$$F = \frac{\pi D^2 P}{4} = 220\text{lbs}$$

The stress area of a fillet weld of leg t is

$$A = 0.707\pi Dt$$

Assuming a weld efficiency of 0.55, and an allowable stress in shear equal to one-half of the room temperature primary stress allowable for titanium gives a required minimum weld leg t to resist pressure of 0.017 in.

If the cold strength of the Ti is used (justifiable since the 60 psi pressure will only occur cold), then the minimum required weld thickness is only 0.006 in.

Visual examination of the weld shows that, while it is not uniform in thickness, the minimum thickness is not smaller than 0.017 in. Based on measurements, the throat of the weld is calculated to be a least 0.14-inch.

<u>X-ray Results of Weld at Bellows Cuff to Cylinders</u>

As seen from the x-ray report of the weld connecting the bellows cuff to the cylinders, the weld is x-rayed in eight sections. One of the sections did not conform due to tungsten inclusion on one side. While this is not allowed according to the Code, it is accepted as safe after a de-rating of the stress factor. As a result, this incident is included in the list of exceptions (Table 1a).

As mentioned in the previous section, the allowable stress of Titanium at 293K is 9630 psi. Applying a de-rating stress factor of .6 results in a de-rated allowable stress of 5778 psi.

With one section out of eight not conforming assume the weld is 87.5% of the total circumference. Letting the weld leg be .23 inch, the total attached area is:

$$A_{attached} = 0.875A = 0.875(\pi Dt) = 5.85in^2$$

Where

D = tube diameter = 9.25 inch
t = weld size = 0.23 inch

The force produced at the maximum pressure of 60 psi is then:

$$F = \frac{\pi D^2 P}{4} = 4032 lbs$$

The total stress seen by the weld that is attached only 87.5% of its length is:

$$\sigma_{attached} = \frac{F}{A_{attached}} = 689.2\ psi$$

The calculated stress in the weld is far less than the de-rated allowable stress of 5778 psi.

Fabrication Information

Fabrication documents for the titanium helium vessel assembly, the bellows assembly are available. These documents are not required by FESHM 5031 but are made available at a centralized location. These documents include material certifications, leak check results, and other quality assurance documents. The documents are available online at the following location:

http://ilc-dms.fnal.gov/Workgroups/CryomoduleDocumentation/ACC013/other-fab-docs/

Appendix B

Verification of ANSYS Results

Hoop Stress in Ti Cylinder

The hoop stress in the Ti cylinder, far from the ends or the flanges (which function like stiffening rings) can be calculated from

$$S = Pr/t$$

where: S = hoop stress
P = pressure
r = mean radius of shell
t = thickness of shell.

Substituting P = 30 psi, r = 4.62 in, t = 0.2 in gives P = 693 psi.

To check this number against the ANSYS results for 30 psi, a path was created in the ANSYS model, and the hoop stress plotted along the path. Figure B-1 shows the path; Figure B-2 shows the comparison of the ANSYS results with those calculated from the expression above. Agreement is extremely good over the region away from the ends, averaging less than 1%.

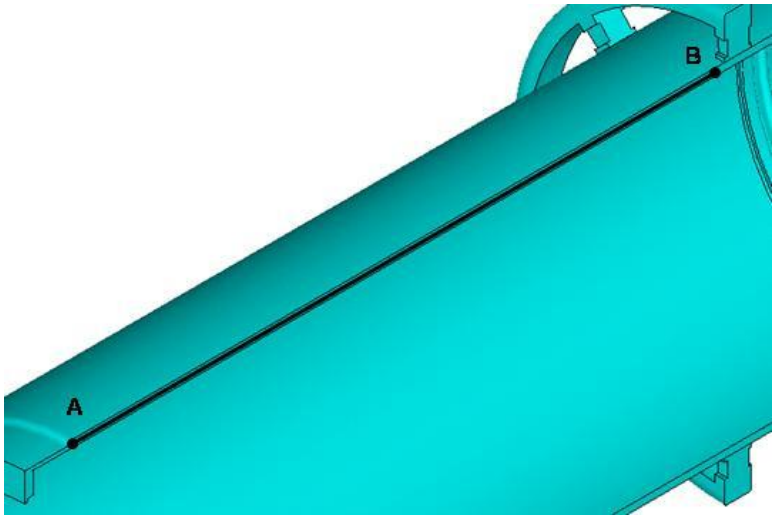

Figure B-1. Path for hoop stress plot

Figure B-2 -
Hoop Stress in Ti Cylinder along line A-B for Pressure of 30 psi

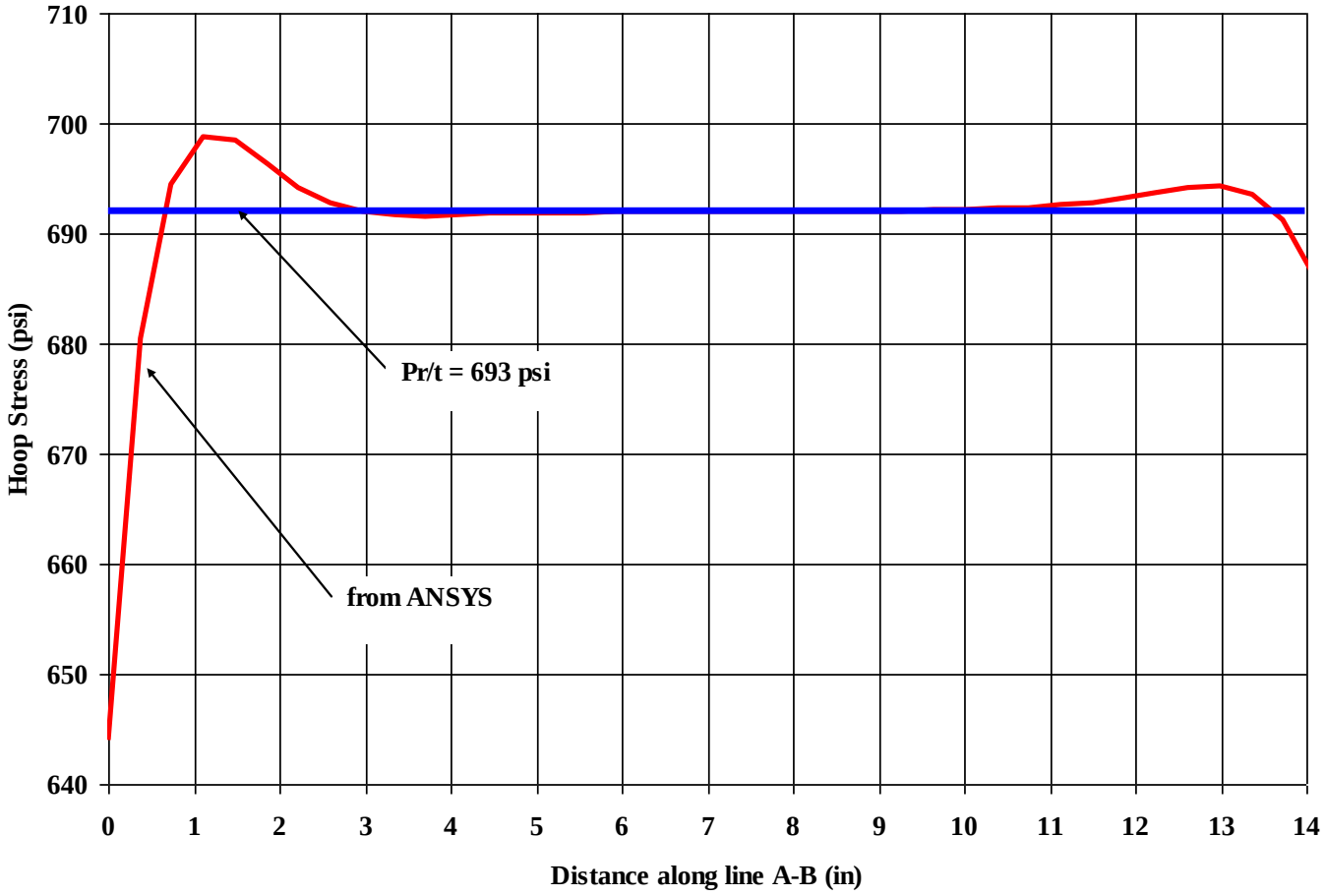

Buckling of Spherical Shell – Approximation to Cell Buckling

The ANSYS model predicted Nb cavity buckling would occur at a pressure of 12450 lbs. This numbers seems very large, so as a check a comparison was performed with the predicted collapse pressure for a thin sphere. [16]

From Ref. 16, Table 35, Case 22, the critical buckling pressure of a thin sphere is

$$q' = \frac{2Et^2}{r^2\sqrt{3(1-\upsilon^2)}}$$

where: q' = critical pressure, psi
E = Young's modulus = 15.2e6 psi
r = radius of sphere = 4.14
υ = Poisson's ratio = 0.38

Substituting gives q' = 13400 psi. This compares well with the ANSYS linear buckling prediction.

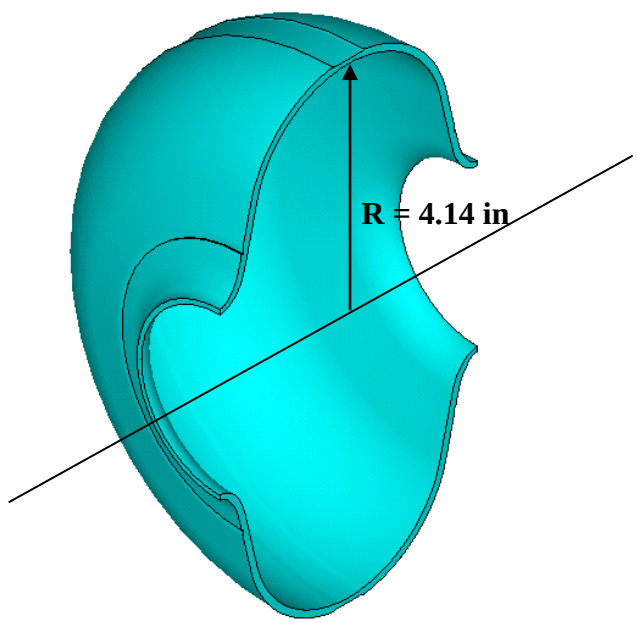

Figure B-3. Single cell – radius for spherical shell buckling calculation

Buckling of Ti Cylinder

The maximum allowable external pressure of the Ti cylinder was determined in section 7.0 of this report using the chart techniques of Div. 1. This calculation can be checked by doing an ANSYS linear buckling calculation on the length of shell used in the Div. 1 calculations, and applying the design factors for linear buckling given in Div. 2, Part 5, 5.4.1. This calculation is also useful for verifying that the buckling pressure of the conical head (calculated as 3880 psi in section 9.0 of this report) is higher than that of the cylinder.

The FE model, which includes the conical head, is shown in Figure B-4, along with the buckled shape. The analysis predicts collapse at 1380 psi. The Code calculation of section 7.0 gives an maximum allowable external pressure for this part of 345 psi. These numbers can be compared by noting that the factor $B = \sigma_{cr}/2$, where σ_{cr} is the hoop stress at which the cylinder buckles [17]. Substituting $\sigma_{cr} = P_{cr}\, r/t$, where P_{cr} is the critical buckling pressure, gives a theoretical buckling pressure for the cylinder of 1040 psi. This is reasonably close to the ANSYS value of 1380 psi.

This alternative calculation of Ti shell buckling pressure also verifies that it lies well below the calculated buckling pressure of the conical head, even when that head is unconstrained by the Nb cavity.

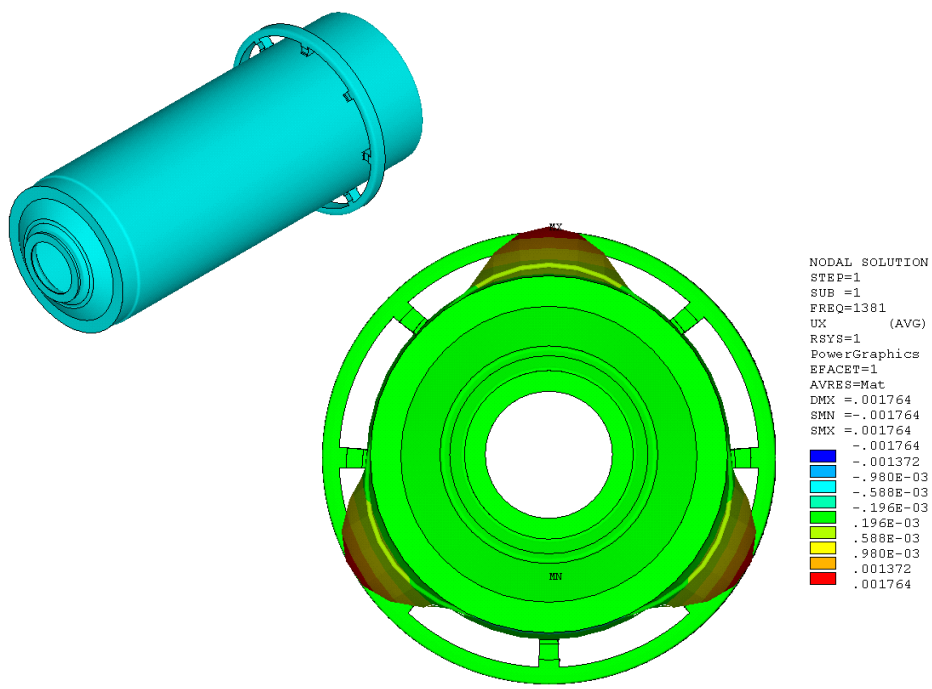

Figure B-4. ANSYS linear buckling of Ti cylindrical shell

Appendix C
Fatigue Analysis of the Titanium Bellows

Here are the detailed calculations of the titanium bellows following the Code's Div. 1, Appendix 26 guidelines. Mathcad (version 14) was the software that was used.

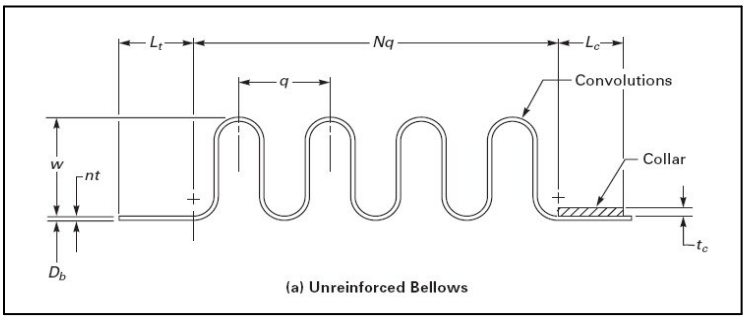

DesignPressure (psi)	$P := 30$
Bellows Inside Diameter (in)	$Db := 9.06$
Ply thickness (in)	$t := 0.01$
Number of Plies	$n := 1$
Bellows Tangent Length (in)	$Lt := 0.398$
Bellows Mean diameter (in)	$Dm := 9.390$
Modulus of elasticity (psi)	$Eb := 1520000$
Convolution height (in)	$w := 0.32$
Collar length (in)	$Lc := 0.17$
Collar thickness (in)	$tc := 0.18$
Collar Modulus of elasticity (psi)	$Ec := 1520000$
Convolution Pitch (in)	$q := 0.34$
Kf coefficient 3.0 for as formed bellows 1.5 for annealed bellows	$Kf := 3.0$
Allowable stress of bellows (psi)	$S := 9630$
Allowable stress of collar (psi)	$Sc := 9630$
Weld joint efficiency of collar to bellows	$Cwc := 0.6$
Number of convolutions	$N := 3$

Bellows axial stiffness (N/micro-meter) $Kb := 0.22$

(lbf/inch) $Kb := Kb \cdot \frac{2.2 \cdot 10^{6} \cdot 2.54}{100}$

$Kb = 1.274 \times 10^{4}$

Allowable yield stress (psi) $Sy := 4000$

Poisson's ratio of Ti G2 $\nu b := 0.3$

Bellows live length (inch) $L := 1.02$

Maximum axial extension (mm) $x_positive := 2.1$

(inch) $x_positive := \frac{x_positive}{25.4}$

$x_positive = 0.083$

Maximum axial compression (mm) $x_negative := 0.3$

(inch) $x_negative := \frac{x_negative}{25.4}$

$x_negative = 0.013$

$Dm := Db + w + n \cdot t = 9.395$

$k := \min\left[\left(\frac{Lt}{1.5\sqrt{Db \cdot t}}\right), 1.0\right] = 0.805$

$tp := \left(t\sqrt{\frac{Db}{Dm}}\right) = 0.012$

$A := \left[\left(\frac{\pi - 2}{2}\right)q + 2w\right] n \cdot tp = 9.906 \times 10^{-3}$

$Dc := Db + 2n \cdot t + tc = 9.27$

$c1 := \frac{q}{2 \cdot w} = 0.528$

$c2 := \frac{q}{2.2\sqrt{Dm \cdot tp}} = 0.466$

$Ixx := n \cdot tp \cdot \left[\frac{(2 \cdot w - q)^{3}}{48} + 0.4q \cdot (w - 0.2q)^{2}\right]$

$e_eq := \sqrt[3]{12 \cdot \left(1 - \nu b^{2}\right) \cdot \frac{Ixx}{q}}$

$D_eq := Db + w + 2 \cdot e_eq$

Total axial movement per convolution (inch) $Axial := \frac{(x_positive + x_negative)}{N}$

$$S1 := \frac{(Db + n\cdot t)^2 Lt\cdot Eb\cdot k\cdot P}{2[n\cdot t\cdot(Db + n\cdot t)Lt\cdot Eb + tc\cdot Dc\cdot Lc\cdot Ec\cdot k]} = 1.416\times 10^3$$

$$S11 := \frac{Dc^2\cdot P\cdot Lt\cdot Ec\cdot k}{2[n\cdot t\cdot(Db + n\cdot t)\cdot Lt\cdot Eb + tc\cdot Dc\cdot Lc\cdot Ec\cdot k]} = 1.479\times 10^3$$

$$S2e := \frac{P\cdot[q\cdot Dm + Lt\cdot(Db + n\cdot t)]}{2(A + n\cdot tp\cdot Lt + tc\cdot Lc)} = 2.212\times 10^3$$

$$S2i := \frac{P\cdot q\cdot Dm}{2\cdot A} = 4.851\times 10^3$$

$$S3 := \frac{P\cdot w}{2n\cdot tp} = 411.147$$

$$S4 := \left(\frac{w}{tp}\right)^2\cdot\frac{P\cdot cp}{2n} = 7.136\times 10^3$$

$$Psc := 0.34\frac{\pi\cdot Kb}{N\cdot q}$$

$$\delta := \frac{S4}{3\cdot S2i}$$

$$\alpha := 1 + 2\cdot\delta^2 + \sqrt{1 - 2\cdot\delta^2 + 4\cdot\delta^4}$$

$$Sy_eff := 2.3Sy$$

$$Psi := (\pi - 2)\cdot\frac{A\cdot Sy_eff}{Dm\cdot q\cdot\sqrt{\alpha}}$$

$\beta 0 := 1.00$ $\beta 1 := 1.$ $\beta 2 := -3.$ $\beta 3 := 7$ $\beta 4 := -8.$ $\beta 5 := 3.3$

$$Cf := \beta 0 + \beta 1\cdot c1 + \beta 2\cdot c1^2 + \beta 3\cdot c1^3 + \beta 4\cdot c1^4 + \beta 5\cdot c1^5$$

$\gamma 0 := 1.$ $\gamma 1 := 1.$ $\gamma 2 := -1.1$ $\gamma 3 := 1.7$ $\gamma 4 := 1.7$ $\gamma 5 := 2.1$

$$Cd := \gamma 0 + \gamma 1\cdot c1 + \gamma 2\cdot c1^2 + \gamma 3\cdot c1^3 + \gamma 4\cdot c1^4 + \gamma 5\cdot c1^5$$

$$S5 := \frac{1}{2}\cdot\frac{Eb\cdot tp^2}{w^3\cdot Cf}\cdot\Delta q$$

$$S6 := \frac{5}{3}\cdot\frac{Eb\cdot tp}{w^2\cdot Cd}\cdot\Delta q$$

$$St := 0.7(S3 + S4) + (S5 + S6)$$

Calculating the buckling pressure for the bellows as an equivalent cylinder

$$\frac{D_eq}{e_eq} = 63.704$$

$$\frac{L}{D_eq} = 0.106$$

$$A_factor := 0.05$$

$$B_factor := 1950$$

$$Pa := \frac{4 \cdot B_factor}{3 \cdot \left(\frac{D_eq}{e_eq}\right)}$$

circumferential membrane stress in bellows tangent (psi)	$S1 = 1.416 \times 10^{3}$
circumferential membrane stress in collar (psi)	$S11 = 1.479 \times 10^{3}$
circumferential membrane stress in bellows (psi) (for end convolution)	$S2e = 2.212 \times 10^{3}$
circumferential membrane stress in bellows (psi) (for intermediate convolution)	$S2i = 4.851 \times 10^{3}$
meridional membrane stress in bellow (psi)	$S3 = 411.147$
meridional bending stress in bellows (psi)	$S4 = 7.136 \times 10^{3}$
allowable internal pressure to avoid column instability (psi)	$Psc = 1.33 \times 10^{4}$
allowable internal pressure based on in-plane instability (psi)	$Psi = 211.979$
allowable external pressure based on instability (psi)	$Pa = 408.137$
meridional membrane stress (psi)	$S5 = 633.681$
meridional bending stress (psi)	$S6 = 4.432 \times 10^{4}$
total stress range due to cyclic displacement (psi)	$St = 5.023 \times 10^{4}$

ACCEPTANCE CRITERIA

$S1 = 1.416 \times 10^{3}$

$S2e = 2.212 \times 10^{3}$

$S2i = 4.851 \times 10^{3}$

$S11 = 1.479 \times 10^{3}$

$S3 + S4 = 7.547 \times 10^{3}$

$P = 30$

$S = 9.63 \times 10^{3}$

$Cwc \cdot Sc = 5.778 \times 10^{3}$

$Kf \cdot S = 2.889 \times 10^{4}$

$Psc = 1.33 \times 10^{4}$

$Psi = 211.979$

$Pa = 408.137$

Appendix D – Pressure Test Results

Fermilab

Date: 8 December 2010

Pressure Testing Permit*

Type of Test: [ ] Hydrostatic [X] Pneumatic

Test Pressure 34.5 psig **Maximum Allowable Working Pressure** 29.7 psid

Items to be Tested
RI-018 Cavity Helium Vessel
Note1: Cavity beam-line is backfilled to atmospheric pressure with boiled off argon gas, outside of the helium vessel is at atmospheric pressure in air
Note 2: The mini Conflat flange at the bottom of the helium vessel will be used to backfill the helium vessel with boiled off nitrogen gas during the test. The Conflat flange on the 2-phase pipe of the helium vessel will be blanked off during the test.
Note 3: The blade tuner is installed to the cavity. It is imperative that the safety rods are engaged between the tuner and the cavity tuner support rings on the helium vessel before the pressure test. This will ensure that the load on the piezo stack will not exceed the allowable limit. The tuner assembly also ensures that the titanium bellows in the middle of the helium vessel is supported during the pressure test.
Note 4: The pressure test will also include an RF frequency measurement before, during, and after pressurization

Location of Test CAF-MP9 **Date and Time** 12/8/10 10:00 am

Hazards Involved
Contact with high velocity jet of test gas.

Safety Precautions Taken
System designed, fabricated, and inspected per ASME Boiler & Pressure Vessels code. Test will be conducted by trained personnel as described in ASME code. Access to test area will be limited only to those involved in the test during pressurization.

Special Conditions or Requirements
Operating pressure = 29.7 PSI, test pressure = 1.15*OP = 34.5 PSI, pneumatic per ASME code.

1. First pressurize to 9-PSI and check for leaks.
2. Repeat at 17-PSI.
3. Increase pressure gradually to the test pressure for 5minutes.
4. Reduce pressure to design pressure.
5. Close valve on regulator.
6. Maintain test for at least 10min. without loss of pressure.

Qualified Person and Test Coordinator Tug Arkan, Ronak Patel 12/8/10
Dept/Date TD/SRF Department

Division/Section Safety Officer Rich Ruthe Richard Ruthe
Dept/Date TD/ESH 12/8/10

Results
Pressure held at 30 psig for 10 minutes without dropping.

Witness Richard Ruthe
Rich Ruthe or designee
Dept/Date TD ES&H / 12/8/10

Detail for the pressure test steps.

Details for the pressure test steps.

The table below shows the pressure levels for each pause and what should be done at that pressure. Total time for the test, not including setup and tear-down time, will be about 20 minutes.

Pressure (psig) (psig equals differential pressure for this test)	Dwell time (minutes)	Activity at pressure
0	--	Baseline RF test
9.0	As needed	Snoop line fitting, RF check
17.0	As needed	Snoop line fitting, RF check
20.5	~1	
24.0	As needed	RF check
27.0	~1	
31.0	As needed	RF check
34.5	5	Peak test pressure of 1.15 x MAWP
30.0	10*	Test pressure hold point*, RF check
25.0	As needed	RF check
17.0	As needed	Visual inspection, RF check
0	--	RF check

*The pressure hold point of 30 psig is approximately the MAWP. Dwell time is set long enough to assure us that pressure is not dropping.

Test Setup

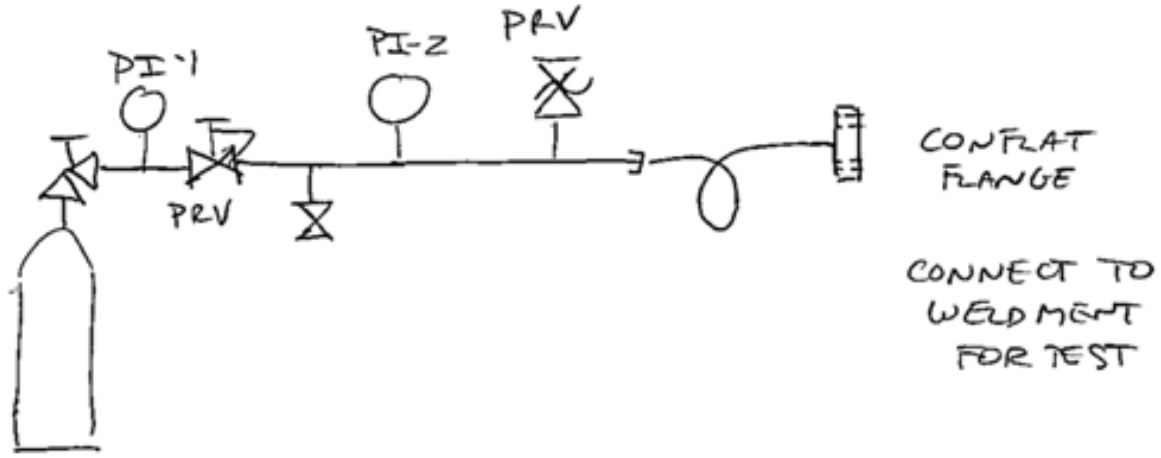

Test Pressure	PI-2	PRV
34.5 psig	0-100 psig	35.4 psig relief

Set-Up of Dressed SRF Cavity for Pressure Test

Appendix E
Supplemental Information Regarding the Titanium Vessel Longitudinal Weld

H. Carter, M. Wong

History

The vendor selected to manufacture the helium vessel subassemblies for our first 20 cavities was Hi Tech out of Bensenville, Illinois. While an excellent parts and assembly manufacturer using more conventional materials of construction such as aluminum and stainless steel, they had limited experience with the welding of titanium. Prior to the contract award, they, as well as two other vendors, were asked to produce a rolled and welded titanium tube of the correct helium vessel dimensions so that we could evaluate their capabilities. Based on the results of that effort and our subsequent evaluation, Hi Tech was awarded the contract.

Table E-1 summarizes the information about the seam welds for each of the helium vessels to date. The vessel number is labeled by Hi-Tech. The table shows the information about the vessel's seam weld and which cavity is welded to the vessel. Further explanation follows the table.

Table E-1 - Summary of Helium Vessel Subassemblies

(as of 25 Aug 2010)

Vessel No.	Seam weld x-rayed?	Accepted?	X-ray date	Dressed Cavity	Planned cool down in HTS?
1st batch (group of 4)					
1	In final subass'y	Yes	24 Apr 09	AES-001	No
2	In final subass'y	Yes	3 Jun 09	AES-004	No
3	In final subass'y	Yes	28 Jul 09	ACC-011	No
4	In final subass'y	Yes	28 Jul 09	AES-002	Yes
2nd and 3rd batches (group of 14)					
5	As a tube	Assume No	Unknown	On hold	---
6	In final subass'y	No **	27 Oct 09	ACC-013	Yes
7	As a tube	Assume No	25 Nov 09	ACC-008	Yes – Complete
8	As a tube	Assume No	15 Mar 10	AES-009	Yes – Complete
9	As a tube	Assume No	Unknown	AES-008	Yes
10	As a tube	Assume No	29 Dec 09	AES-010	Yes – Complete
11	In final subass'y	Assume No	12 Mar 10	RI-029	Yes - Complete
13	In final subass'y	Assume No	12 Mar 10	ACC-016	Yes - Complete
14	In final subass'y	Assume No	12 Mar 10	AES-007	Yes
18	In final subass'y	Assume No	13 Apr 10	RI-018	Yes
4th batch (group of 2)					
19	In final subass'y	Assume No	TBD	RI-019	TBD
20	Not applicable	---	---	TBD	TBD

** Weld in final subassembly did not pass x-ray. However, weld passed x-ray in tube.

The first four tubes produced by Hi Tech were of acceptable quality and passed X-Ray radiography by Alloy Weld Inspection Company, a Bensenville, Illinois based NDE firm.

Those four tubes were subsequently utilized to create the first four delivered helium vessel subassemblies. The vessels have been used on the following dressed cavities: AES-001, AES-004, ACC-011, and AES-002.

The next batch of six tubes was not as successful, primarily because during the time between the

two batches, the most experienced titanium welder at Hi Tech retired. According to Alloy Weld, only one tube passed radiography. The other five had instances of "incomplete fusion" at the weld root---primarily because of joint edge mismatches at the rolled tube inside diameter.

Without informing Fermilab of the status of the tubes, Hi Tech continued tube production with another batch of 10 tubes. Again, only one of them passed X-Ray radiography. The tubes that did not pass exhibited the same types of weld defects (primarily incomplete fusion) as the aforementioned six tubes.

Figures E-1 and E-2 show the radiography results of the 16 tubes

Figure E-1 – X-Ray Results of Tubes from 2nd Batch of Tubes

1-6

ALLOYWELD INSPECTION COMPANY, INC.

796 MAPLE LANE PHONE: (630) 595-2145 FAX: (630) 595-2128 BENSENVILLE, ILLINOIS 60106-1585

X-RAY READER SHEET

TO: FERMI NATIONAL LAB
PO BOX 500
BATAVIA, IL 60510

DATE: JUNE 3, 2009
ORDER NO: PRN118462
REGISTER NO: 176088
WORK ORDER NO: 57751
PAGE 1 OF 1

INSPECTION INFORMATION

PART NUMBER D849685 REV A		MATERIAL	HEAT CODE
FILM NUMBER U410	NO OF VIEWS 3	NO OF FILM (18) CR SHOTS	
PROCESSED IN ACCORDANCE WITH: ASME B31.3			

X-RAY SERIAL NUMBER	Accept	Non-Conforming	Cracks	Shrinkage	Shrink Cavities	Porosity	Gas Holes	Voids	Surface	REMARKS OR OTHER DISCONTINUITIES
SN: 1 A-B	X									
B-C	X									TUNGSTEN
C-D		X*								IP
SN: 2 A-B	X									
B-C		X*								IF
C-D	X									
SN: 3 A-B	X									
B-C		X*								IP
C-D	X					X				
SN: 4 A-B		X*								IF
B-C		X*								IF
C-D		X*								IF
SN: 5 A-B	X									
B-C		X*								IF
C-D	X									ROOT CONCAVITY
SN: 6 A-B	X									
B-C	X									
C-D	X									

SEP 1 2009

This report is limited to the defects of the type that can be located with the above method. Any changes to shaded areas make this report

ACCEPTABLE 1 PCS.
NON-CONFORMING 5 PCS.

ALLOYWELD INSPECTION - RADIOGRAPHER SIGNATURE

JENNIFER ANAYA
NAS 410/MIL-STD-410E LEVEL II

WELDING: ARC-HELIARC, BRAZING, SILVER AND SOFT SOLDERING • INSPECTION: MAGNETIC PARTICLE, PENETRANT, COMPUTED RADIOLOGY, IMMERSION ULTRASONICS, PASSIVATING, NITAL ETCH, SURFACE TEMPER ETCH, STRESS REL

Figure E-2 – X-Ray Results from 3rd Batch of Tubes

ALLOYWELD INSPECTION COMPANY, INC.

796 MAPLE LANE PHONE: (630) 595-2145 FAX: (630) 595-2128 BENSENVILLE, ILLINOIS 60106-1585

X-RAY READER SHEET

TO:

HI-TECH MFG. LLC
4637 N. 25TH AVE.
SCHILLER PARK, IL 60176

DATE: JULY 22, 2009
ORDER NO: 25387
REGISTER NO: 176951
WORK ORDER NO: 58461
PAGE 1 OF 1

INSPECTION INFORMATION

PART NUMBER	D849685 REV A		MATERIAL	TITANIUM	HEAT CODE
FILM NUMBER	U513	NO OF VIEWS	3	NO OF FILM	(30)CR SHOTS
PROCESSED IN ACCORDANCE WITH:	ASME B31.3				

X-RAY SERIAL NUMBER	Accept	Non-Conforming	Cracks	Shrinkage	Shrink Cavities	Porosity	Gas Holes	Voids	Surface	REMARKS OR OTHER DISCONTINUITIES
SN: 1 A-B	X									
B-C		X								IF
C-D		X								IF
SN: 2 A-B		X								IF
B-C		X								IF
C-D		X								IF
SN: 3 A-B		X								IF
B-C		X								IF
C-D	X									
SN: 4 A-B		X								IF
B-C		X								IF
C-D		X								IF
SN: 5 A-B		X								IF
B-C		X								IF
C-D		X								IF
SN: 6 A-B		X								IF
B-C		X								P/IF
C-D		X								IF
SN: 7 A-B		X								IF
B-C		X								IF
C-D	X									
SN: 8 A-B		X								IF
B-C		X								F/IP
C-D	X									
SN: 9 A-B	X									
B-C	X									
C-D	X									ROOT CONCAVITY
SN: 10 A-B		X								IF
B-C		X								IF
C-D		X								IF

This report is limited to the defects of the type that can be located with the above method. Any changes to shaded areas make this report

ACCEPTABLE 1 PCS.
NON-CONFORMING 9 PCS.

ALLOYWELD INSPECTION - RADIOGRAPHER SIGNATURE

JENNIFER ANAYA
NAS 410/MIL-STD-410E LEVEL II

WELDING: ARC-HELIARC, BRAZING, SILVER AND SOFT SOLDERING • INSPECTION: MAGNETIC PARTICLE, PENETRANT, X-RAY, COMPUTED RADIOLOGY, IMMERSION ULTRASONICS, PASSIVATING, NITAL ETCH, SURFACE TEMPER ETCH, STRESS RELIEF

Figure E-3 shows the x-ray image of Tube #4, Weld B-C from the first batch of six tubes. The image shows the dark line that corresponds to the joint mismatch at the weld. The image is typical of the x-ray results that are non-conforming for all sixteen tubes.

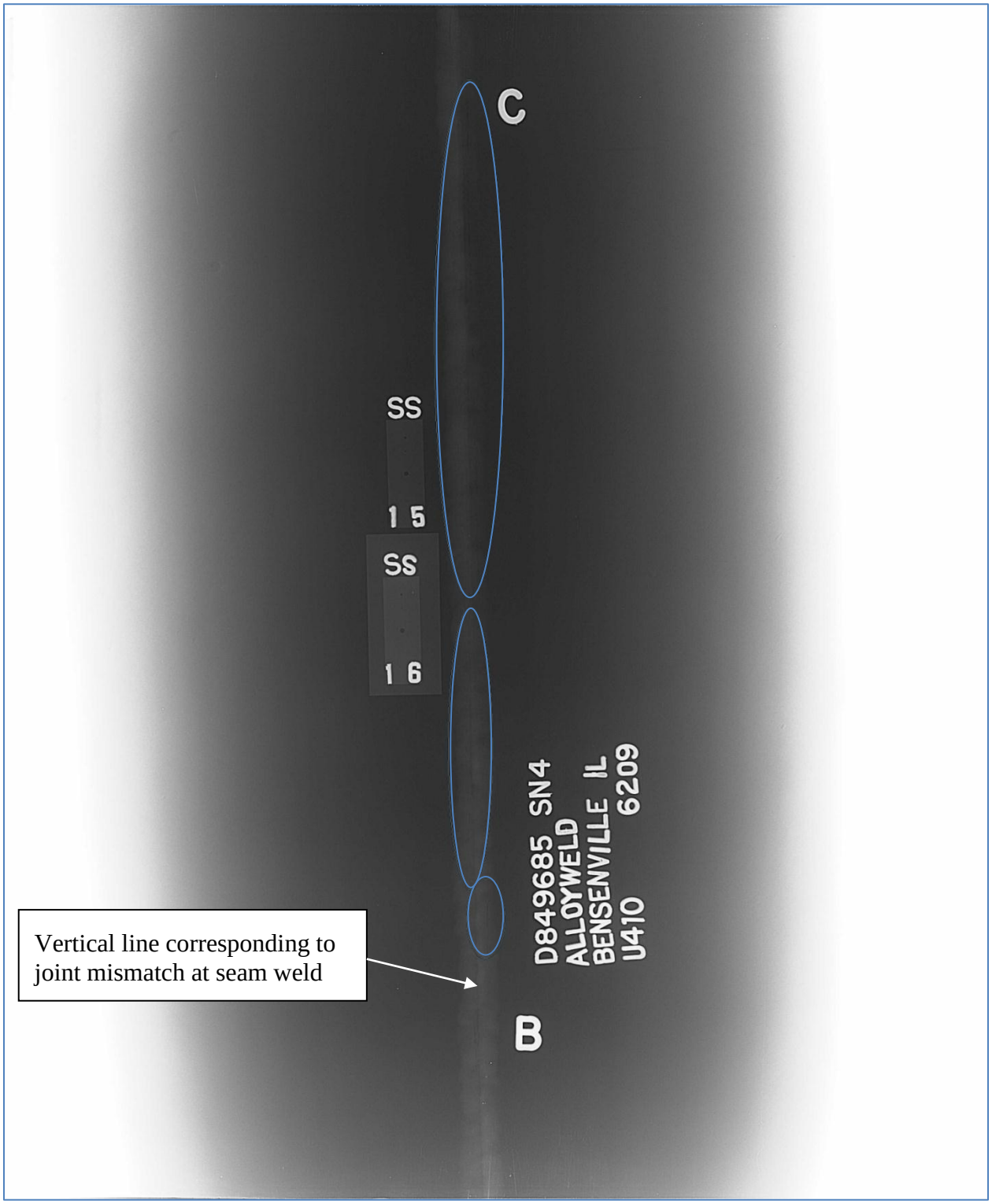

Figure E-3 – X-Ray Image of the Tube #4, Weld B-C

Circled areas show which parts of the weld are non-conforming due to incomplete fusion, as listed in the results in Figure E-1.

At this point in time, Hi-Tech notified Fermilab of the status of the 16 tubes. After a discussion between Hi Tech and the Fermilab ILC program engineering staff, the following decisions were

made in order to proceed with helium vessel construction and reduce delays in schedule:

- Identify the tube from the most recent batch that passed radiography to use on the helium vessel subassembly. This tube (SN9 in Figure E-2) eventually was used on dressed cavity ACC-013.
- Salvage the tubes that showed "incomplete fusion" due to joint edge mismatch.
- Drop the radiography conformance for the seam weld in the final assembly.

In the end, all six of the second batch of tubes were used on helium vessel subassemblies. Of the third batch, enough of the rolled tubes were used to create seven helium vessel subassemblies. The single conformed tube of the third batch was used to create the eighth helium vessel subassembly. So the total number of tubes from the 2nd and 3rd batches that are used on helium vessels is 14. At this point in time, any information referencing the tubes to the helium vessel subassemblies was lost.

For the last two tubes of the 20 helium vessel subassembly order with Hi Tech, the tubes will be machined from solid Grade 2 titanium stock and, as such, they will not contain any longitudinal welds.

Exceptions Regarding Longitudinal Weld for Engineering Note

In the case of the titanium helium vessel longitudinal weld of RI-018, two exceptions are requested for the pressure vessel engineering note. The reason for one exception is that the weld is a Category A joint which requires a Type 1 (welded from both sides) or Type 2 (welded from one side with backing strip) butt weld rather than the Type 3 (welded from one side with no backing strip) butt weld that was used. Use of the Type 3 butt weld was driven by the design requirement for maximal space between the niobium cavity equator and the helium vessel inside diameter, as well as being historically rooted in the helium vessel design in use at DESY for the last 15 years.

The reason for the second exception is that the tube, from the 3rd batch, did not pass radiography inspection at the longitudinal weld. Upon visual inspection, none of the weld defects are considered to compromise the tube integrity, and all defects are well within the minimum acceptable wall thickness when the joint was de-rated by using a 0.6 weld joint efficiency. Thus, a 0.6 weld joint efficiency is applied to the analysis of the longitudinal welds of these tubes.

Radiography vs. no Radiography

When helium vessel subassembly fabrication began at Hi Tech, the plan was to X-Ray radiograph all of the subassembly final welds. As the fabrication progressed, difficulties with producing a conforming longitudinal weld resulted in unacceptable programmatic delays. In order to reduce the delay time associated with conformance of the longitudinal weld, a combined ILC management/ILC engineering staff decision was made to drop the radiography conformance requirement for this joint, record any joint non-conformance as an exception in the engineering note, and in all cases to apply a weld efficiency of 0.6 to this joint in the engineering analyses. A contributing factor to this decision was x-ray result of the helium vessel that was used for ACC-013. The helium vessel subassembly longitudinal weld failed to pass radiography, even though the assembly was fabricated from a tube whose longitudinal weld had already passed

radiography.

In order to ensure the adequacy of the longitudinal welds, a thorough internal and external visual inspection of the weld is conducted, looking for any weld flaws and looking for an acceptably colored weld joint. In addition, a helium mass spectrometer leak check is performed on each subassembly.

Future Plans

As noted in Table E-1, cavities have been welded to vessels 1 through 18 with the exception of vessels 5,12,15,16, and 17. Of those dressed cavities, four have seam welds that have not been radiographed as a helium subassembly: ACC-008, AES-008, AES-009, and AES-010. The pressure vessel engineering notes for these dressed cavities include the exception that the longitudinal weld has not passed radiography.

For the remaining helium vessel subassemblies, including those that have been delivered to Fermilab (vessels 11-18) all longitudinal welds will be radiographed. Conformances and non-conformances will be noted in their respective engineering notes. A weld joint efficiency of 0.6 will be applied to all of the longitudinal welds for analysis purposes, regardless of the outcome of the radiography. This is the most conservative, consistent approach to the issue and will result in uniformity in the analyses of all helium vessel subassemblies.

References

1. Fermilab's ES&H Manual, Chapter 5031.6, "Dressed Niobium SRF Cavity Pressure Safety," Aug 2010.
2. ASME, Boiler and Pressure Vessel Code, 2007.
3. "Vacuum Vessel Engineering Note for SMTA Horizontal Test Cryostat," ATA-010, February 2007
4. Y. Pischalnikov, et al, "Resonance Control in SCRF Cavities," September, 2008.
5. "Pressure Vessel Engineering Note for the 3.9-GHz Helium Vessel, Cavity #5," IND-102, July 2008.
6. Peterson, T., "3.9-GHz Helium Vessel, Low Temperature Maximum Allowable working Pressure," March, 2009
7. Standards of the Expansion Joint Manufacturers Association, Inc, 7th Edition.
8. American Institute of Steel Construction, Manural of Steel Construction, 8th Edition, 1980.
9. Compressed Gas Association, Inc., "Pressure Relief Device Standards, Part 3 – Stationary Storage Containers for Compressed Gases," CGA S-1.3-2008, 8th Edition.
10. Soyar, B., private email, December 2007.
11. Kropschot, R.H., et al, "Technology of Liquid Helium," National Bureau of Standards, Monograph 111, October 1968.
12. G. Cavallari, et al, "Pressure Protection Against Vacuum Failures on the Cryostats for LEP SC Cavities", European Organization for Nuclear Research, 27 Sep, 1989. CERN internal note AT-CR/90-09 presented at 4th Workshop on RF Superconductivity, Tsukuba, Japan (1998).
13. W. Lehmann, et al, "Safety Aspects for LHe Cryostats and LHe Transport Containers," Proceedings of the 7th International Cryogenic Engineering Conference, London, 1978.
14. TTF Design Report, Section 5.5.1.
15. Crane, Flow of Fluids, Technical Paper 410, 1988.
16. Roark, R.J. and Young, W.C., Formulas for Stress and Strain, 5th Edition, McGraw-Hill, 1975.
17. Rao, K.R., et al, Companion Guide to the ASME Boiler and Pressure Vessel Code, Vol. 1.
18. Panzeri, N., "Design of Slim Tuner ver. 3.9.4," INFN-Milano LASA Document No. ILC-TUN-DE-39, April 2008.
19. Pagani, C., et al, "Blade-Tuner Performance," presented at the LCWS08 and ILC08 conference, November 2008.