REVISION HISTORY CAD MAINTAINED. CHANGES SHALL BE INCORPORATED BY THE DESIGN ACTIVITY.				
ZONE	REV	DESCRIPTION	DATE	APPROVED
	A	INITIAL RELEASE - ER # ILC-000010		

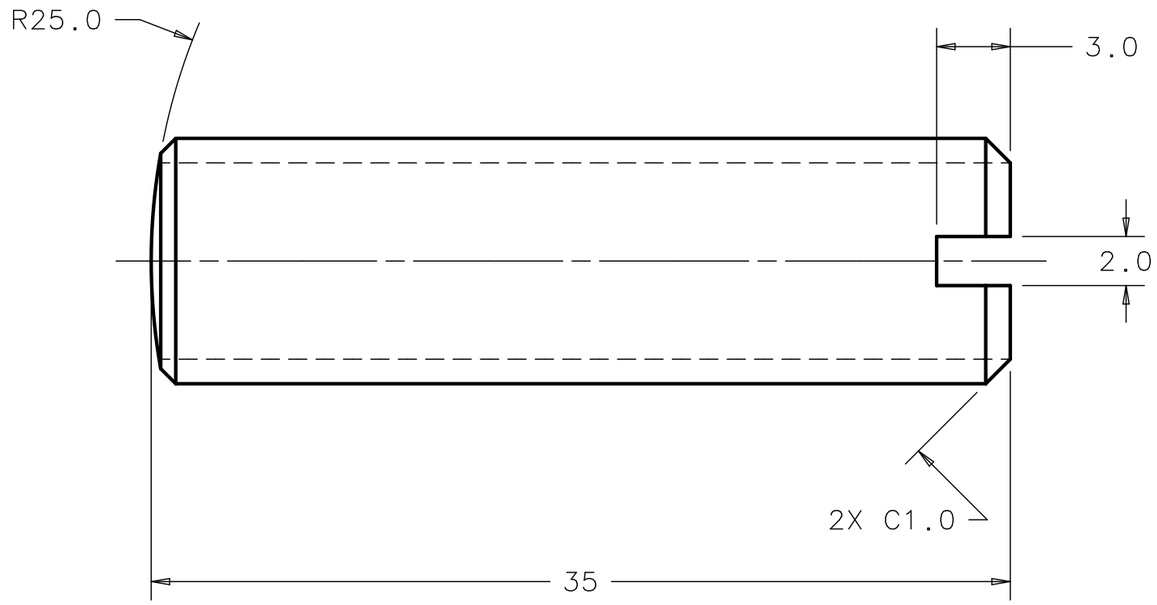

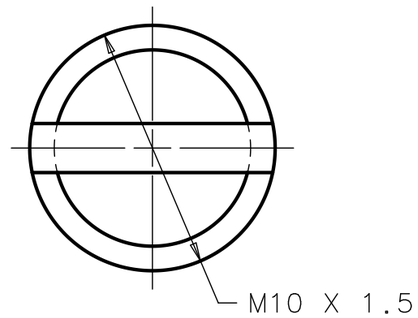

NOTES (UNLESS OTHERWISE SPECIFIED):

1. PART MUST BE FREE OF DIRT, GREASE, OIL AND CHIPS.

ITEM	P.I.N.	DESCRIPTION	QTY

PARTS LIST

-	858545
NEXT ASSY	USED ON
APPLICATION	

FINISH: N/A

MATERIAL: ST.STEEL 316L

UNLESS OTHERWISE SPECIFIED:
DIMENSIONS ARE IN MILLIMETERS
INTERPRET DIM PER ASME Y14.5M-1994
BREAK ALL SHARP EDGES .75 MAX.
ALL MACH. SURFACES 3.2 MAX.

TOLERANCES: X ± 1, .X ± 0.5, .XX ± -, ANGLE ± 1°

THIRD ANGLE PROJECTION

DRAWN BY Y.ORLOV	DATE 09JAN09	
CHECKED BY D. ARNOLD	DATE 24FEB09	
ENGINEERED BY Y. ORLOV	DATE 25FEB09	
DATABASE DESY EDMS	TEAM/GROUP T4CM CRYOMODULE	
CAD I-DEAS	SOLID MODEL NO. N/A	

FERMI NATIONAL ACCELERATOR LABORATORY
UNITED STATES DEPARTMENT OF ENERGY
P.O. BOX 500, BATAVIA, IL 60510-0500

TITLE
CM2 CRYOMODULE
CM2 DIPOLE
SCREW_ADJUSTMENT

SIZE	CAGE CODE	DWG NO.	REV
A3	0U5R6	D00000000864915	A

SCALE 4:1 | DO NOT SCALE DWG | SHEET 1 OF 1

REV	DESCRIPTION	DRAWN	DATE
		APPROVED	DATE
--	ER #9625 NEW RELEASE		

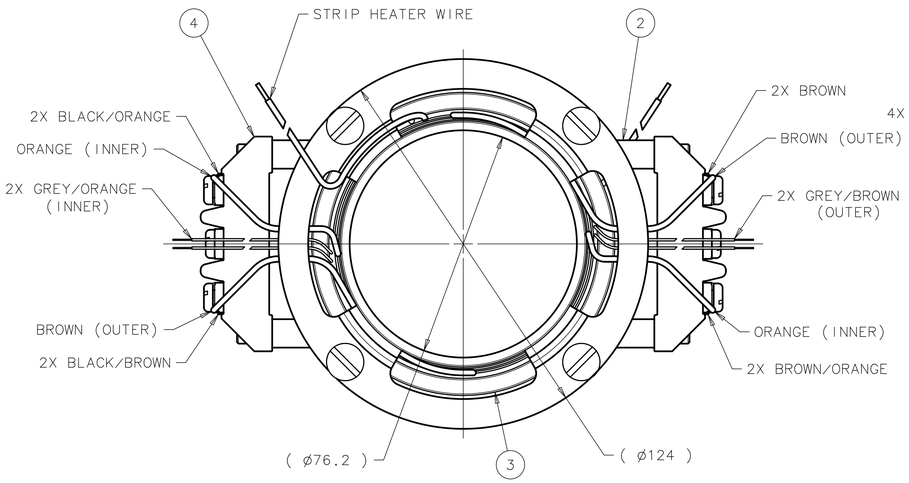

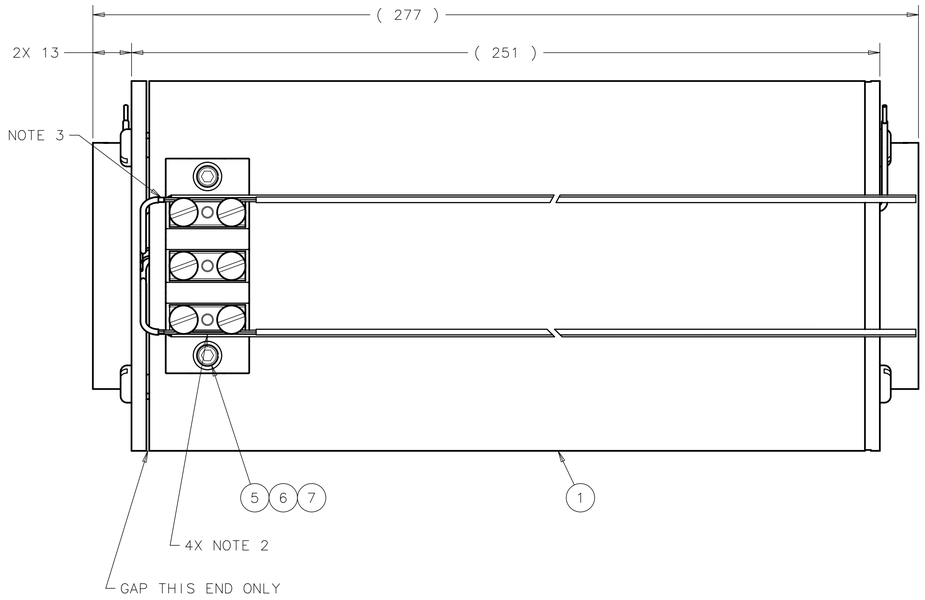

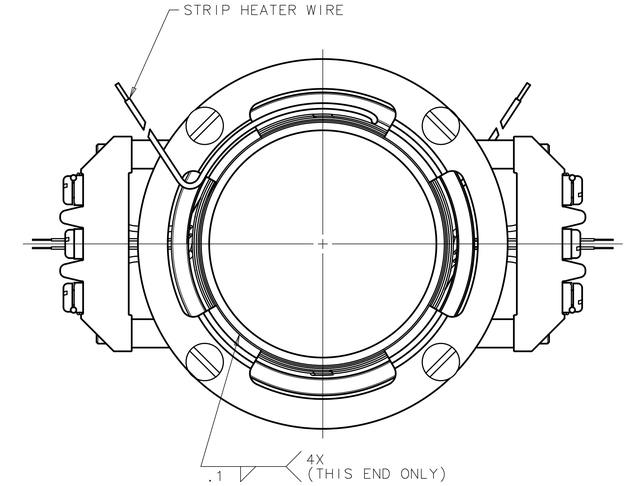

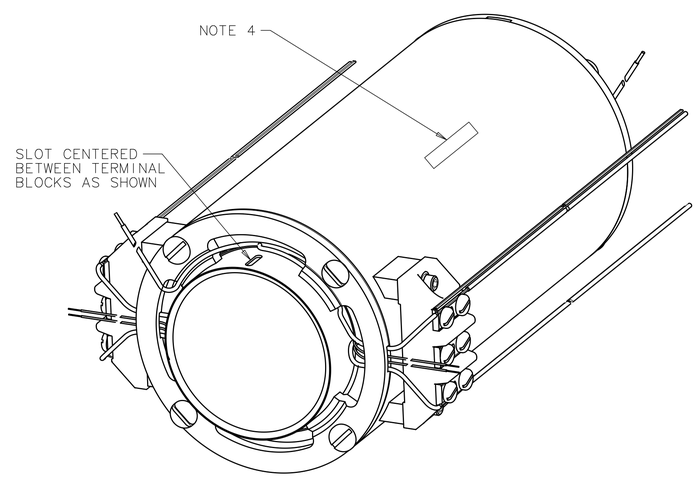

SCALE: 3:4

NOTES (UNLESS OTHERWISE SPECIFIED):

1. AFTER ASSEMBLY EQUAL LENGTHS ON EACH END OF ITEM #3.
2. BARE WIRES TO BE ASSEMBLED AS SHOWN TO ITEM 4.
3. CRIMP AND SOLDER (2) WIRE EACH AS SHOWN. (TAP WIRES)
4. SIX DIGIT PART NUMBER SHALL BE ENGRAVED, ETCHED, PERMANENT INK OR STEEL STAMPED IN THIS LOCATION WITH 1/8" HIGH CHARACTERS.

ITEM	PART NO.	DESCRIPTION OR SIZE	QTY.
7	COML	WASHER - LOCK #8 18-8 S.S.	4
6	COML	WASHER - FLAT #8 18-8 S.S.	4
5	COML	SCREW - SHC 8-32 X 1.0 18-8 S.S.	4
4	COML	TERMINAL BLOCK - WECO #361-F	2
3	MD-461350	ASSEMBLY V2	1
2	MB-460737	TERMINAL SHIM	4
1	MB-460148	MAGNETIC SHIELD ASSEMBLY	1

PARTS LIST

UNLESS OTHERWISE SPECIFIED			ORIGINATOR	N.ANDREEV	28-DEC-2009
X.X	X.XX	ANGLES	DRAWN	W.SHARP	28-DEC-2009
± 0.5	± 0.25	± 1°	CHECKED	D.ARNOLD	04-FEB-2010
			APPROVED	N.ANDREEV	05-FEB-2010

1. BREAK ALL SHARP EDGES 0.8 MAX.
2. DO NOT SCALE DRAWING.
3. DIMENSIONS BASED UPON ASME Y14.5M-1994
4. MAX. ALL MACH. SURFACES 3.2
5. DRAWING UNITS: MILLIMETER

USED ON

MATERIAL: AS NOTED

FERMI NATIONAL ACCELERATOR LABORATORY
UNITED STATES DEPARTMENT OF ENERGY

CRYOMODULE 2 SUPERCONDUCTING DIPOLE CORRECTOR DIPOLE CORRECTOR ASSEMBY

SCALE	DRAWING NUMBER	SHEET	REV
1:1 & NOTED	4904.030-MD-460856	1 OF 1	

CREATED WITH : Ideas12NXSeries GROUP: TD/DDCIS-DESIGN-COMPUTING

REVISION HISTORY CAD MAINTAINED. CHANGES SHALL BE INCORPORATED BY THE DESIGN ACTIVITY.				
ZONE	REV	DESCRIPTION	DATE	APPROVED
	A	INITIAL RELEASE - ER # ILC-000010		

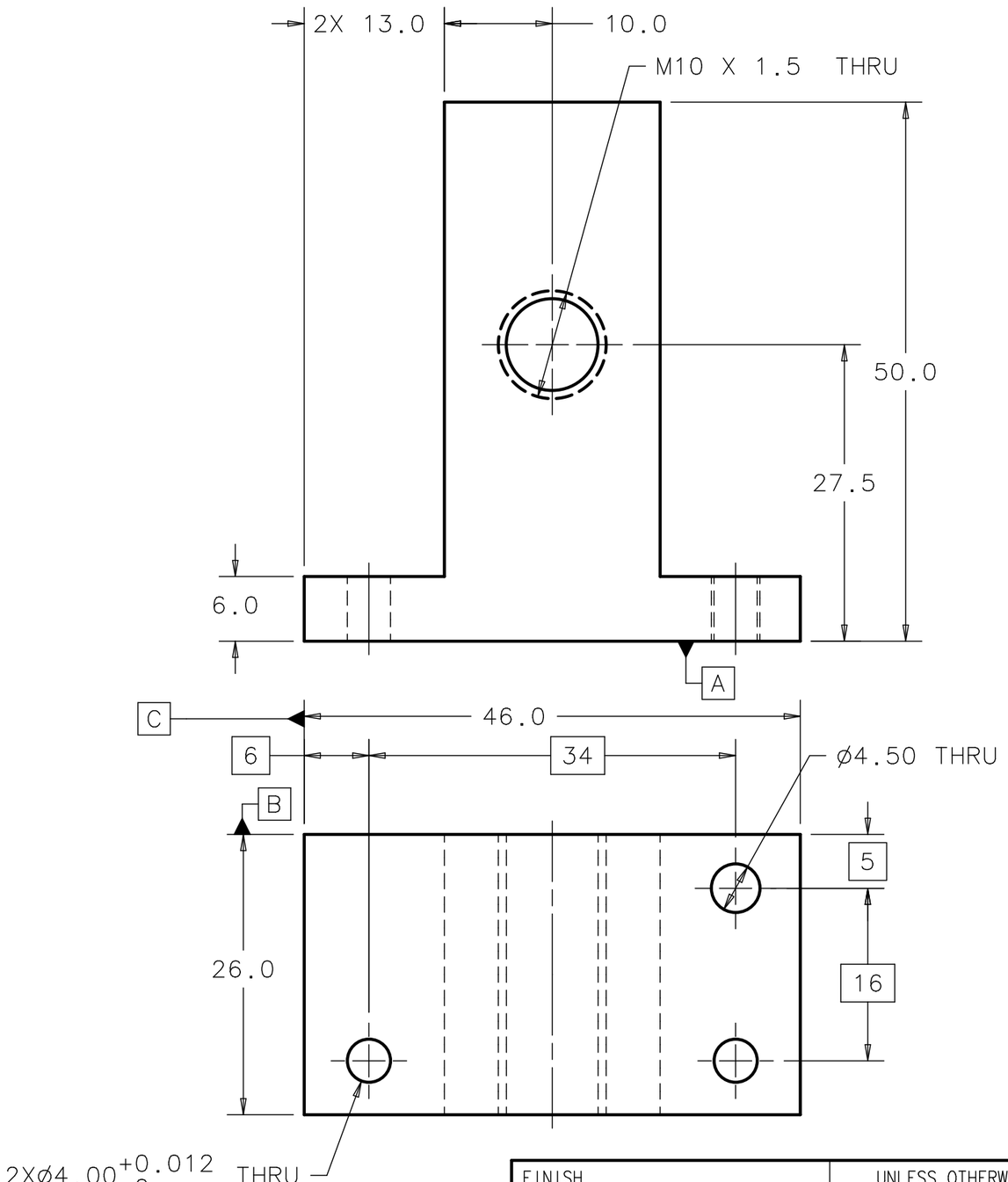

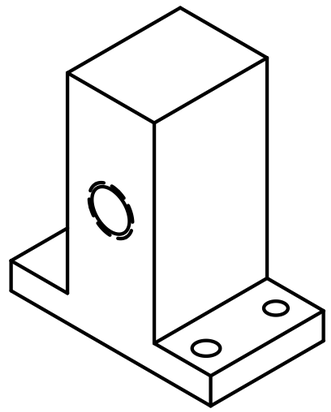

NOTES (UNLESS OTHERWISE SPECIFIED):

1. PART MUST BE FREE OF DIRT, GREASE, OIL AND CHIPS.

ITEM	P.I.N.	DESCRIPTION	QTY

PARTS LIST

-	858545
NEXT ASSY	USED ON
APPLICATION	

FINISH N/A	UNLESS OTHERWISE SPECIFIED: DIMENSIONS ARE IN MILLIMETERS INTERPRET DIM PER ASME Y14.5M-1994 BREAK ALL SHARP EDGES .75 MAX. ALL MACH. SURFACES 3.2 MAX.	DRAWN BY Y.ORLOV	DATE 10JAN09
		CHECKED BY D. ARNOLD	DATE 24FEB09
		ENGINEERED BY Y. ORLOV	DATE 25FEB09
MATERIAL ST.STEEL 316L	TOLERANCES X ± - .X ± 0.5 .XX ± - ANGLE ± -	THIRD ANGLE PROJECTION	DATABASE DESY EDMS / TEAM/GROUP T4CM CRYOMODULE
			CAD I-DEAS / SOLID MODEL NO. N/A

FERMI NATIONAL ACCELERATOR LABORATORY
UNITED STATES DEPARTMENT OF ENERGY
P.O. BOX 500, BATAVIA, IL 60510-0500

TITLE
CM2 CRYOMODULE
CM2 DIPOLE
BLOCK_MOUNTING_1-HOLE

SIZE	CAGE CODE	DWG NO.	REV
A3	0U5R6	D00000000864905	A
SCALE 2:1	DO NOT SCALE DWG	SHEET 1 OF 1	

REVISION HISTORY CAD MAINTAINED. CHANGES SHALL BE INCORPORATED BY THE DESIGN ACTIVITY.				
ZONE	REV	DESCRIPTION	DATE	APPROVED
	A	INITIAL RELEASE - ER # ILC-000010		

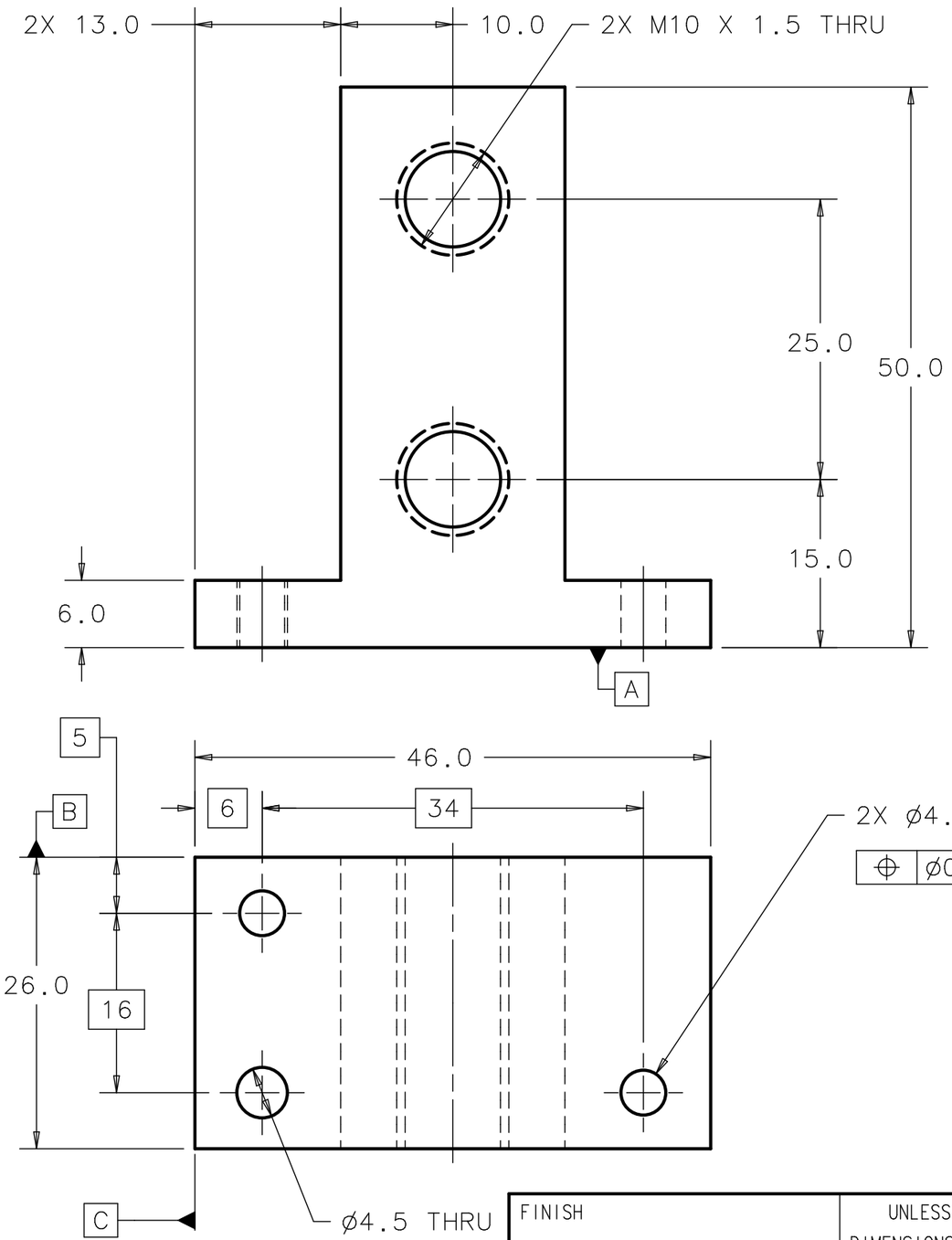

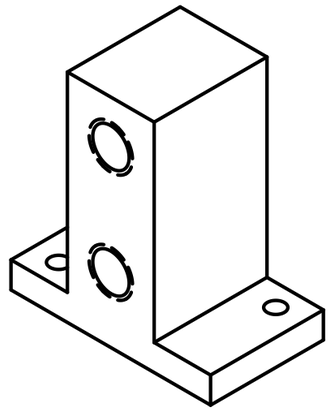

NOTES (UNLESS OTHERWISE SPECIFIED):

1. PART MUST BE FREE OF DIRT, GREASE, OIL AND CHIPS.

ITEM	P.I.N.	DESCRIPTION	QTY

PARTS LIST

-	858545
NEXT ASSY	USED ON

APPLICATION

FINISH: N/A

MATERIAL: ST. STEEL 316L

UNLESS OTHERWISE SPECIFIED:
DIMENSIONS ARE IN MILLIMETERS
INTERPRET DIM PER ASME Y14.5M-1994
BREAK ALL SHARP EDGES .75 MAX.
ALL MACH. SURFACES 3.2 MAX.

TOLERANCES: X ± - ; .X ± 0.5 ; .XX ± - ; ANGLE ± -

THIRD ANGLE PROJECTION

DRAWN BY Y.ORLOV	DATE 10JAN09	
CHECKED BY D. ARNOLD	DATE 24FEB09	
ENGINEERED BY Y. ORLOV	DATE 25FEB09	
DATABASE DESY EDMS	TEAM/GROUP T4CM CRYOMODULE	
CAD I-DEAS	SOLID MODEL NO. N/A	

FERMI NATIONAL ACCELERATOR LABORATORY
UNITED STATES DEPARTMENT OF ENERGY
P.O. BOX 500, BATAVIA, IL 60510-0500

TITLE
CM2 CRYOMODULE
CM2 DIPOLE
BLOCK_MOUNTING_2-HOLE

SIZE	CAGE CODE	DWG NO.	REV
A3	0U5R6	D00000000864895	A

SCALE 2:1 | DO NOT SCALE DWG | SHEET 1 OF 1

REVISION HISTORY CAD MAINTAINED. CHANGES SHALL BE INCORPORATED BY THE DESIGN ACTIVITY.				
ZONE	REV	DESCRIPTION	DATE	APPROVED
	A	INITIAL RELEASE		

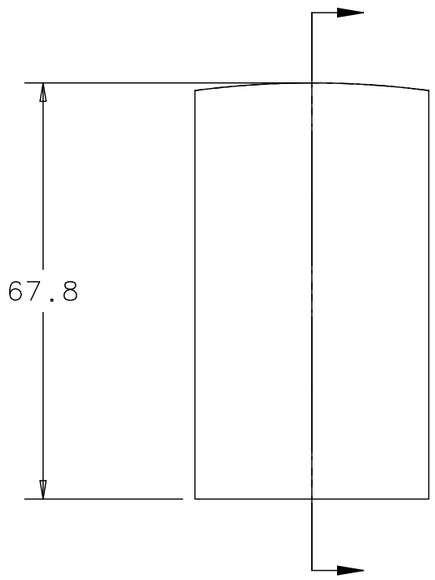

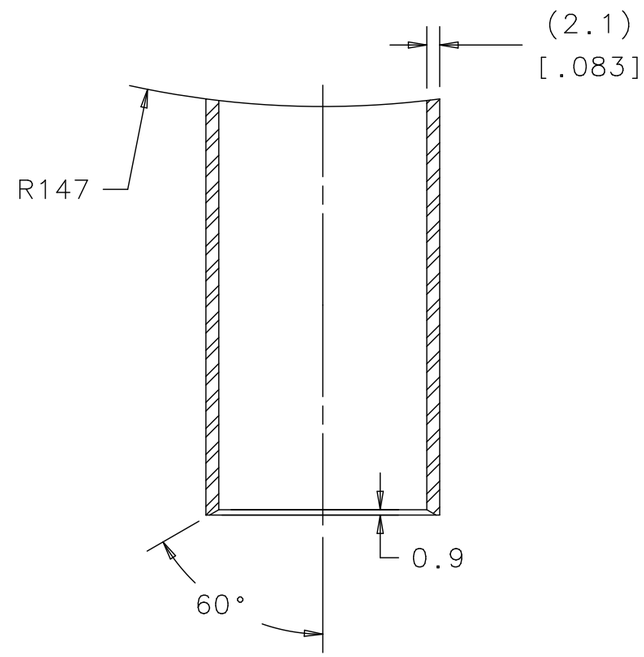

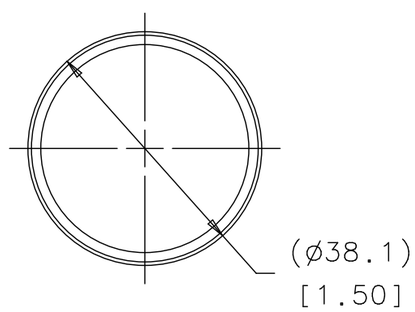

NOTE:

1. DIMENSIONS WITH [ ] ARE IN INCHES.
2. PART TO BE DEBURRED.

ITEM	P.I.N.	DESCRIPTION	QTY

PARTS LIST

-	857305
NEXT ASSY	USED ON

APPLICATION

FINISH: N/A

MATERIAL: PIPE 1.5"-O.D. , .083" - WALL THK, ST. STEEL 316L

UNLESS OTHERWISE SPECIFIED:
DIMENSIONS ARE IN MILLIMETERS
INTERPRET DIM PER ASME Y14.5M-1994
BREAK ALL SHARP EDGES .75 MAX.
ALL MACH. SURFACES 3.2 MAX.

TOLERANCES: X ± 1, .X ± 0.5, .XX ± --, ANGLE ± 1°

THIRD ANGLE PROJECTION

DRAWN BY Y.ORLOV	DATE 07JAN09		
CHECKED BY	DATE		
ENGINEERED BY	DATE		
DATABASE DESY EDMS	TEAM/GROUP T4CM CRYOMODULE		
CAD I-DEAS	SOLID MODEL NO. N/A		

FERMI NATIONAL ACCELERATOR LABORATORY
UNITED STATES DEPARTMENT OF ENERGY
P.O. BOX 500, BATAVIA, IL 60510-0500

TITLE
CM2 CRYOMODULE
CM2 DIPOLE
PIPE_DIPOLE_HE-OUT

SIZE	CAGE CODE	DWG NO.	REV
A3	0U5R6	D00000000864645	A

SCALE 1:1 | DO NOT SCALE DWG | SHEET 1 OF 1

REVISION HISTORY CAD MAINTAINED. CHANGES SHALL BE INCORPORATED BY THE DESIGN ACTIVITY.				
ZONE	REV	DESCRIPTION	DATE	APPROVED
	A	INITIAL RELEASE		

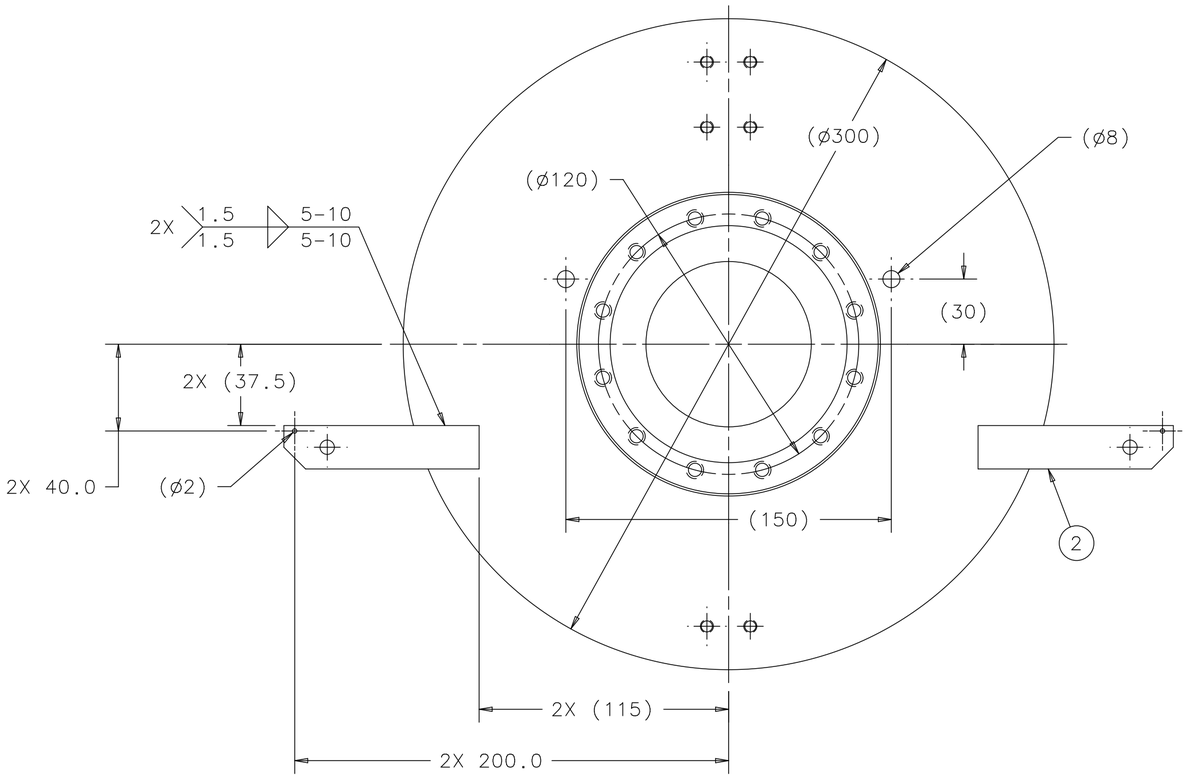

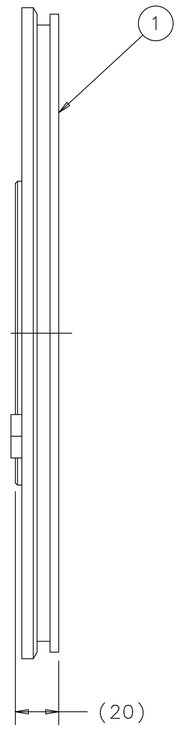

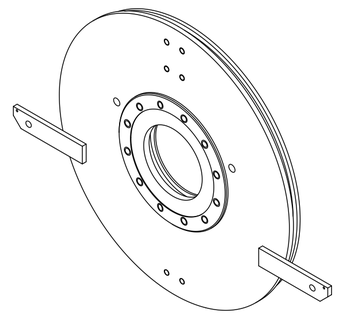

NOTES (UNLESS OTHERWISE SPECIFIED):

1. WELDS TO BE AS SMOOTH AS POSSIBLE, FINISH GRIND SMOOTH MAY BE REQUIRED TO OBTAIN A SMOOTH TRANSITION.

2. ASSEMBLY MUST BE FREE FROM DIRT, GREASE, OIL AND CHIPS; AND PROPERLY PACKED TO AVOID DAMAGE TO FLANGES SEALING SURFACES.

ITEM	P.I.N.	DESCRIPTION	QTY
2	861485	BRACKET SENSOR SPRT	2
1	858225	FLANGE XFEL VESSEL US	1

PARTS LIST

NEXT ASSY	USED ON
-	858535

APPLICATION

FINISH: N/A

MATERIAL: SEE PARTS LIST

UNLESS OTHERWISE SPECIFIED:
DIMENSIONS ARE IN MILLIMETERS
INTERPRET DIM PER ASME Y14.5M-1994
BREAK ALL SHARP EDGES .75 MAX.
ALL MACH. SURFACES 3.2 MAX.

TOLERANCES: X ± - ; .X ± 0.8 ; .XX ± - ; ANGLE ± 1°

THIRD ANGLE PROJECTION

DRAWN BY Y.ORLOV	DATE 20NOV08	
CHECKED BY	DATE	
ENGINEERED BY	DATE	
DATABASE DESY EDMS	TEAM/GROUP T4CM CRYOMODULE	
CAD I-DEAS	SOLID MODEL NO. N/A	

FERMI NATIONAL ACCELERATOR LABORATORY
UNITED STATES DEPARTMENT OF ENERGY
P.O. BOX 500, BATAVIA, IL 60510-0500

TITLE
CM2 CRYOMODULE
CM2 DIPOLE
FLANGE_XFEL_VESSEL_US_WLDMT

SIZE	CAGE CODE	DWG NO.	REV
A2	0U5R6	D00000000861615	A

SCALE 1:2 | DO NOT SCALE DWG | SHEET 1 OF 1

REVISION HISTORY CAD MAINTAINED. CHANGES SHALL BE INCORPORATED BY THE DESIGN ACTIVITY.				
ZONE	REV	DESCRIPTION	DATE	APPROVED
	A	INITIAL RELEASE		

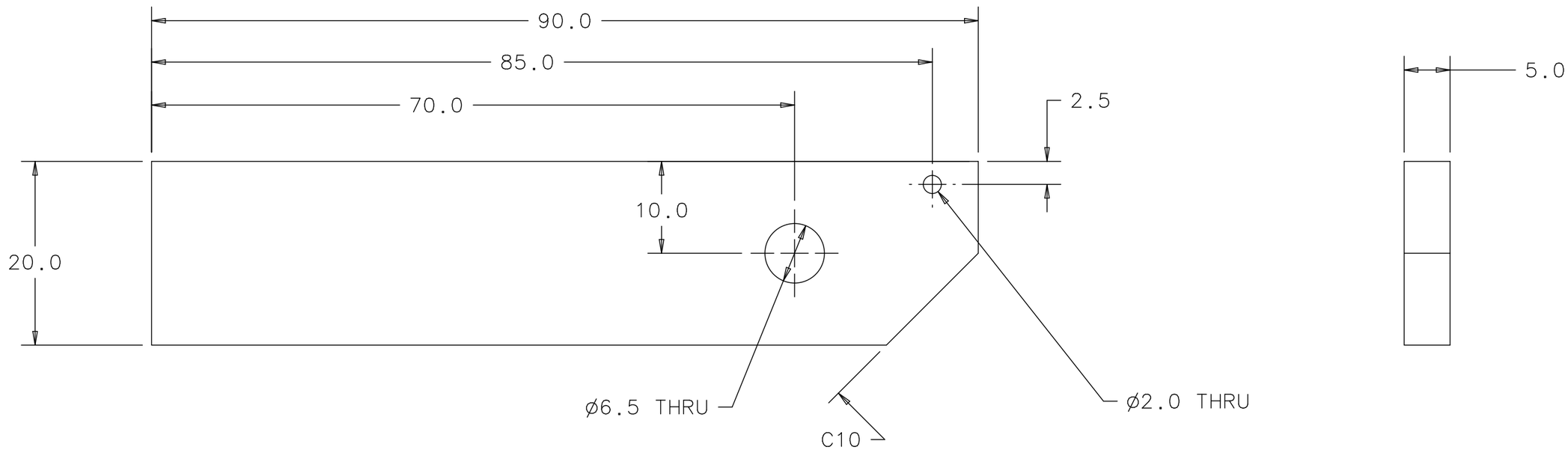

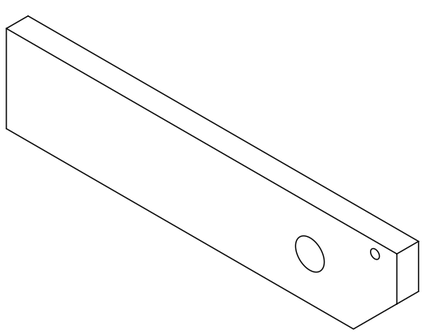

ITEM	P.I.N.	DESCRIPTION	QTY

PARTS LIST

-	861475
NEXT ASSY	USED ON
APPLICATION	

FINISH: N/A

MATERIAL: N/A ST.STEEL 316L

UNLESS OTHERWISE SPECIFIED:
DIMENSIONS ARE IN MILLIMETERS
INTERPRET DIM PER ASME Y14.5M-1994
BREAK ALL SHARP EDGES .75 MAX.
ALL MACH. SURFACES 3.2 MAX.

TOLERANCES: X ± - ; .X ± 0.5 ; .XX ± - ; ANGLE ± 1°

THIRD ANGLE PROJECTION

DRAWN BY Y.ORLOV	DATE 19NOV08	
CHECKED BY	DATE	
ENGINEERED BY	DATE	
DATABASE DESY EDMS	TEAM/GROUP T4CM CRYOMODULE	
CAD I-DEAS	SOLID MODEL NO. N/A	

FERMI NATIONAL ACCELERATOR LABORATORY
UNITED STATES DEPARTMENT OF ENERGY
P.O. BOX 500, BATAVIA, IL 60510-0500

TITLE
CM2 CRYOMODULE
CM2 DIPOLE
BRACKET_SENSOR_SPRT

SIZE	CAGE CODE	DWG NO.	REV
A3	0U5R6	D00000000861485	A
SCALE 2:1	DO NOT SCALE DWG	SHEET 1 OF 1	

REVISION HISTORY CAD MAINTAINED. CHANGES SHALL BE INCORPORATED BY THE DESIGN ACTIVITY.				
ZONE	REV	DESCRIPTION	DATE	APPROVED
	A	INITIAL RELEASE		

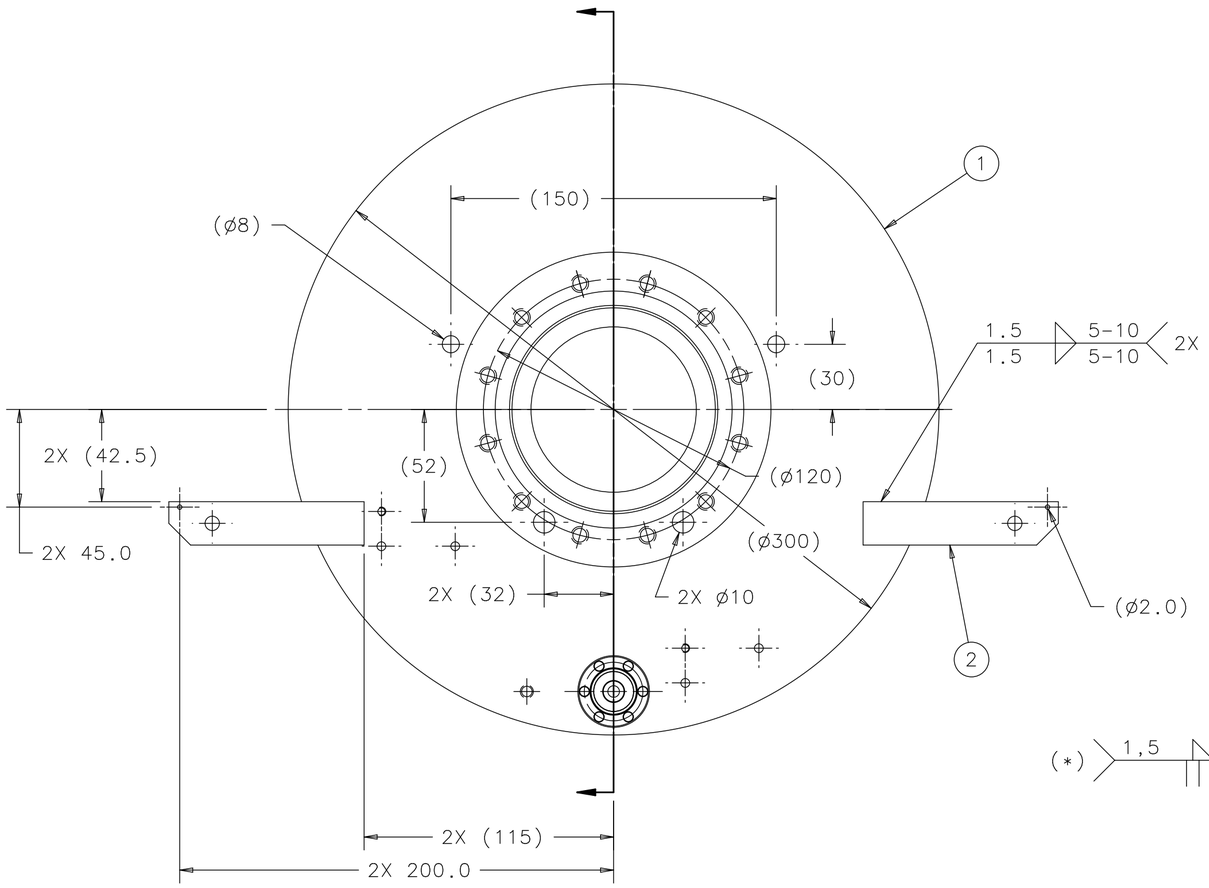

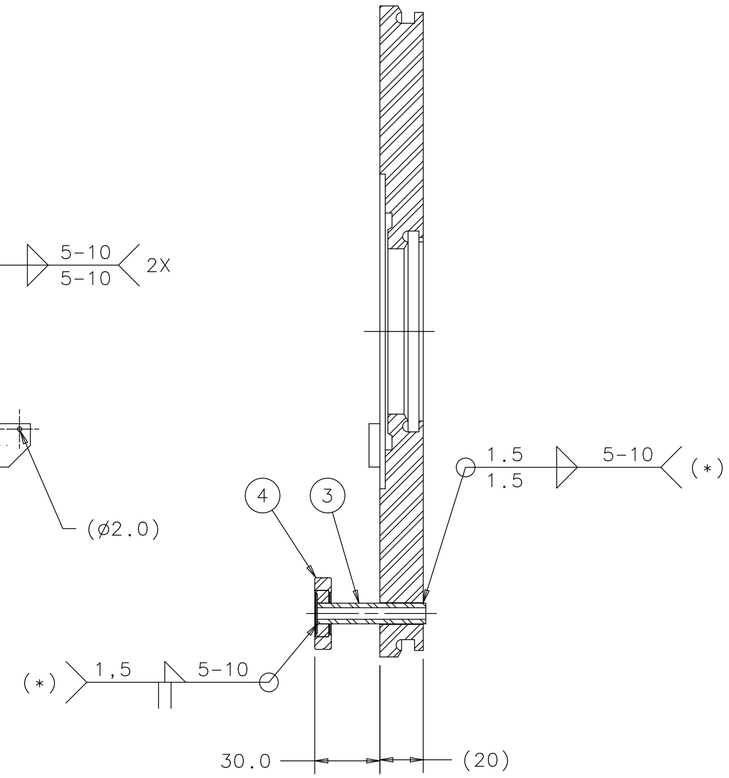

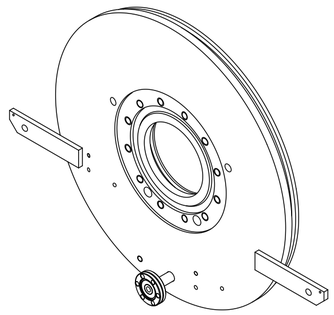

NOTES (UNLESS OTHERWISE SPECIFIED):

1. FABRICATE PER ASME B31.3, NORMAL FLUID SERVICE.
2. THE FOLLOWING DOCUMENTS SHALL BE SUPPLIED WITH DELIVERY OF WELDMENT:

   A. WELD PROCEDURE SPECIFICATION (WPS).
   B. PROCEDURE QUALIFICATION RECORDS (PQR).
   C. WELDER PERFORMANCE QUALIFICATION (WPQ).
   D. EXAMINATION REPORT.

3. LEAK TEST TO BE PERFORMED AT FERMILAB BEFORE ACCEPTANCE.
4. WELDS WITH (*) TO BE CACUUM TIGHT, NO LEAK SHALL BE DETECTABLE ON THE MOST SENSITIVE SCALE OF A HELIUM DETECTOR WITH A MIN SENSITIVE OF 2 X 10^{-10} ATM, CC/SEC PER FERMILAB SPECIFICACION # 1620-ES-187240.
5. INTERIOR WELDS TO BE AS SMOOTH AS POSSIBLE, FINISH GRIND SMOOTH MAY BE REQUIRED TO OBTAIN A SMOOTH TRANSITION.
6. ASSEMBLY MUST BE FREE FROM DIRT, GREASE, OIL AND CHIPS; AND PROPERLY PACKED TO AVOID DAMAGE TO FLANGES SEALING SURFACES.

ITEM	P.I.N.	DESCRIPTION	QTY
4	COM'L	KURT J. LESKER 1-1/3" O.D. CF FLANGE # F0133X037R	1
3	COM'L	TUBE 3/8" O.D. , .308"-WALL THK 50 mm -LG, ST.STEEL 316	1
2	861485	BRACKET SENSOR SPRT	2
1	858215	FLANGE XFEL VESSEL DS	1

PARTS LIST

NEXT ASSY	USED ON
-	858535

APPLICATION

FINISH: N/A	UNLESS OTHERWISE SPECIFIED: DIMENSIONS ARE IN MILLIMETERS INTERPRET DIM PER ASME Y14.5M-1994 BREAK ALL SHARP EDGES .75 MAX. ALL MACH. SURFACES 3.2 MAX.	DRAWN BY: Y.ORLOV	DATE: 19-NOV-08
		CHECKED BY	DATE
		ENGINEERED BY	DATE
MATERIAL: SEE PARTS LIST	TOLERANCES: X ± -, .X ± 0.8, .XX ± -, ANGLE ± 1°	THIRD ANGLE PROJECTION	
		DATABASE: DESY EDMS	TEAM/GROUP: T4CM CRYOMODULE
		CAD: I-DEAS	SOLID MODEL NO.: N/A

FERMI NATIONAL ACCELERATOR LABORATORY
UNITED STATES DEPARTMENT OF ENERGY
P.O. BOX 500, BATAVIA, IL 60510-0500

TITLE
CM2 CRYOMODULE
CM2 DIPOLE
FLANGE_XFEL_VESSEL_DS_WLDMT

SIZE	CAGE CODE	DWG NO.	REV
A2	0U5R6	D00000000861475	A

SCALE 1:2 | DO NOT SCALE DWG | SHEET 1 OF 1

Created: 15:58:37 on 07-01-09 (D-M-Y) By: orlov State: 1-INITIAL

REVISION HISTORY CAD MAINTAINED. CHANGES SHALL BE INCORPORATED BY THE DESIGN ACTIVITY.				
ZONE	REV	DESCRIPTION	DATE	APPROVED
	A	INITIAL RELEASE		

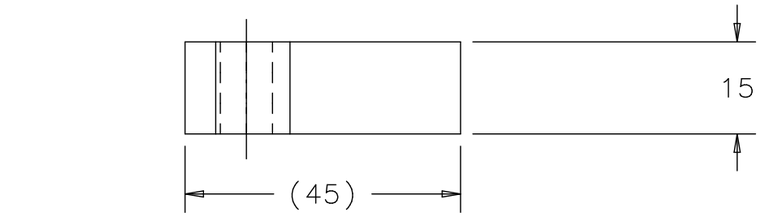

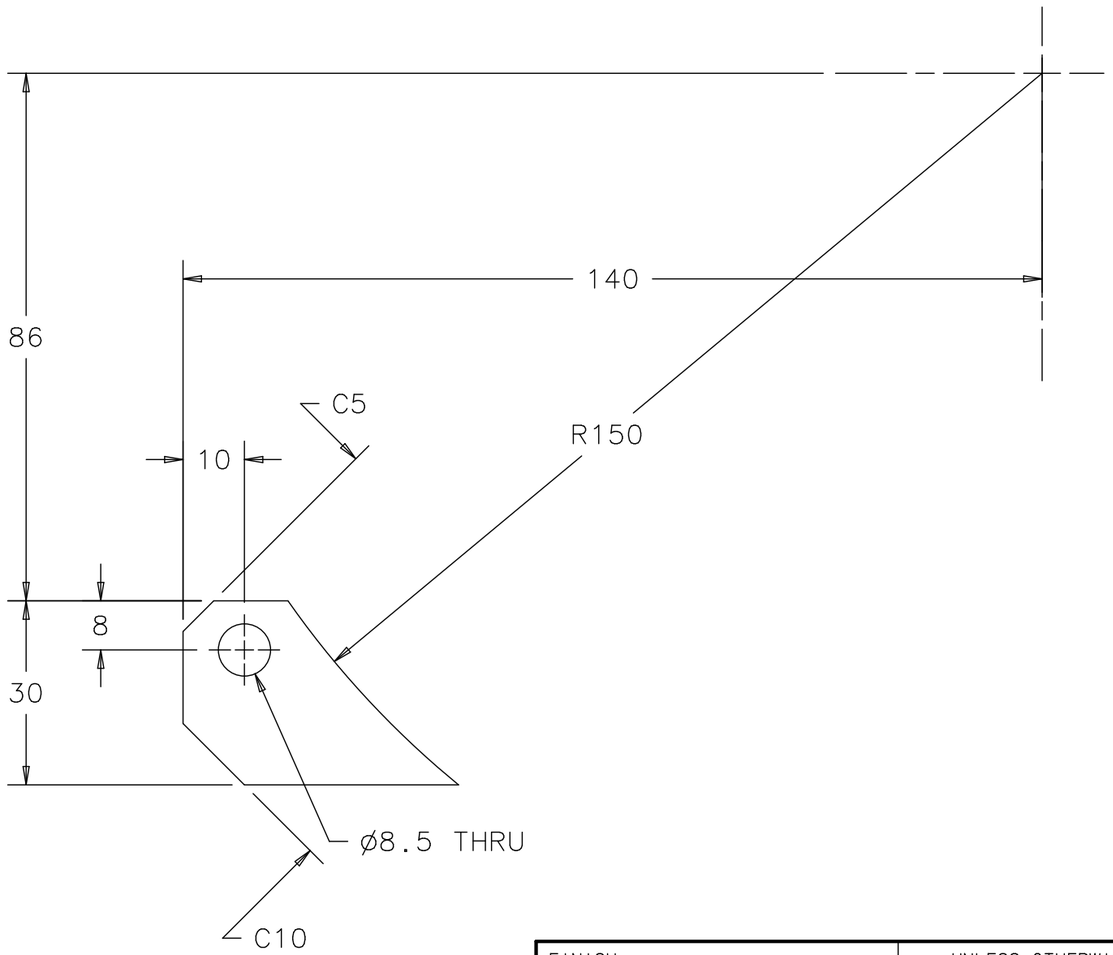

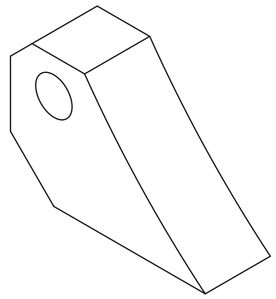

ITEM	P.I.N.	DESCRIPTION	QTY

PARTS LIST

-	857305
NEXT ASSY	USED ON
APPLICATION	

FINISH: N/A

MATERIAL: ST.STEEL 316L

UNLESS OTHERWISE SPECIFIED:
DIMENSIONS ARE IN MILLIMETERS
INTERPRET DIM PER ASME Y14.5M-1994
BREAK ALL SHARP EDGES .75 MAX.
ALL MACH. SURFACES 3.2 MAX.

TOLERANCES: X ± 1, .X ± -, .XX ± -, ANGLE ± 1°

THIRD ANGLE PROJECTION

DRAWN BY: Y.ORLOV	DATE: 18NOV08		
CHECKED BY	DATE		
ENGINEERED BY	DATE		
DATABASE: DESY EDMS	TEAM/GROUP: T4CM CRYOMPDULE		
CAD: I-DEAS	SOLID MODEL NO.: N/A		

FERMI NATIONAL ACCELERATOR LABORATORY
UNITED STATES DEPARTMENT OF ENERGY
P.O. BOX 500, BATAVIA, IL 60510-0500

TITLE
CM2 CRYOMODULE
CM2 DIPOLE
SUPPORT_INSTL_DIPOLE

SIZE	CAGE CODE	DWG NO.	REV
A3	0U5R6	D00000000861285	A
SCALE 1:1	DO NOT SCALE DWG	SHEET 1 OF 1	

REVISION HISTORY					
CAD MAINTAINED. CHANGES SHALL BE INCORPORATED BY THE DESIGN ACTIVITY.					
ZONE	REV	DESCRIPTION	DATE	CHECKED	APPROVED
	A	INITIAL RELEASE - ER # ILC-000010			

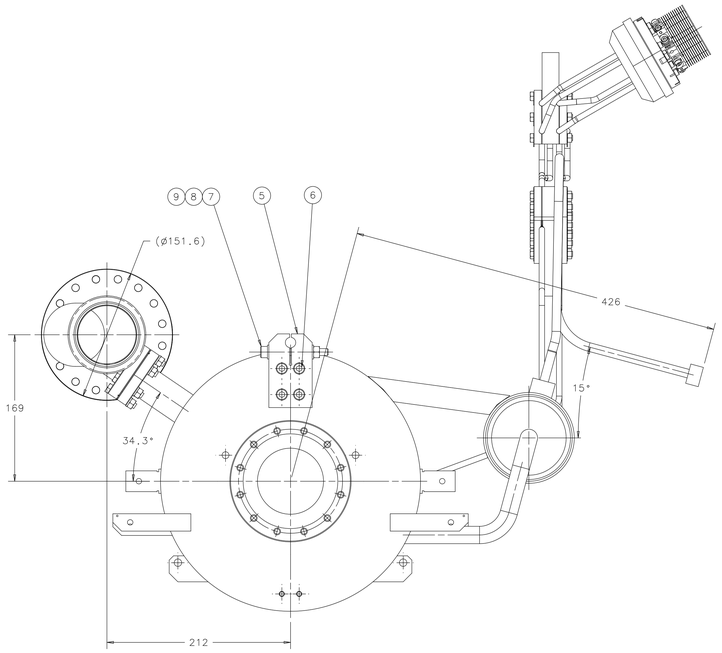

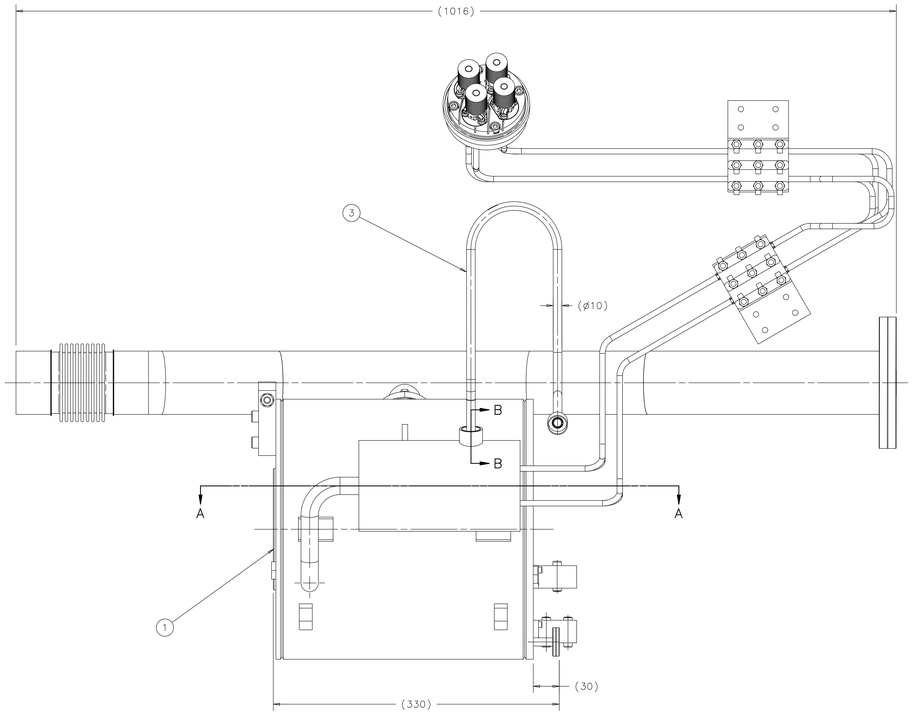

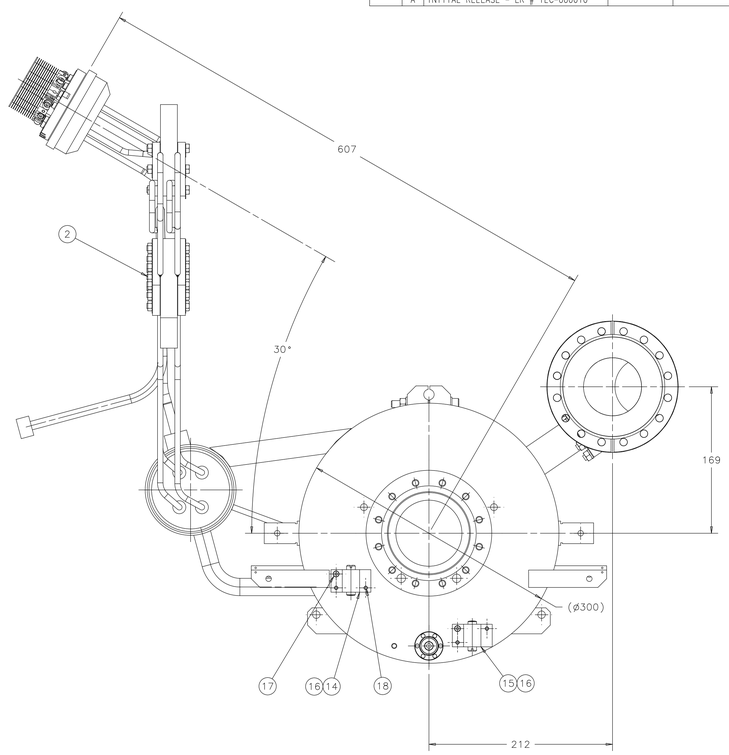

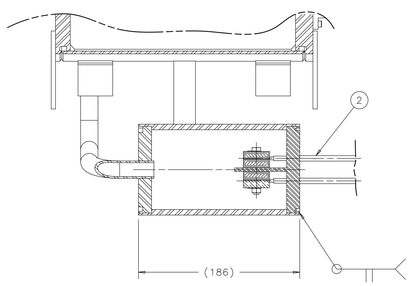

SECTION A-A

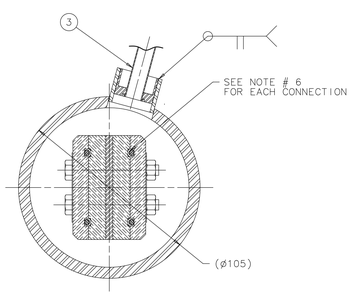

SECTION B-B
SCALE 1:1

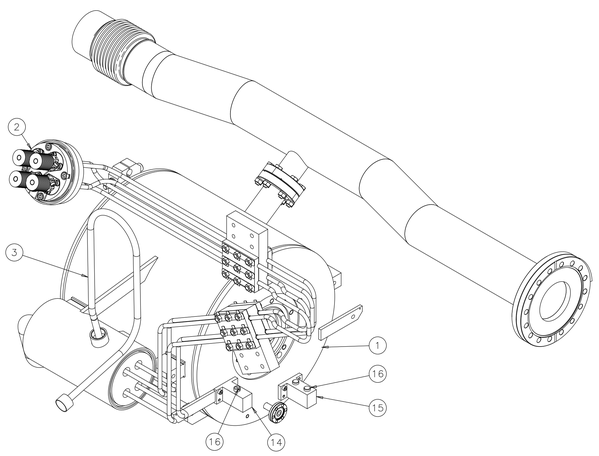

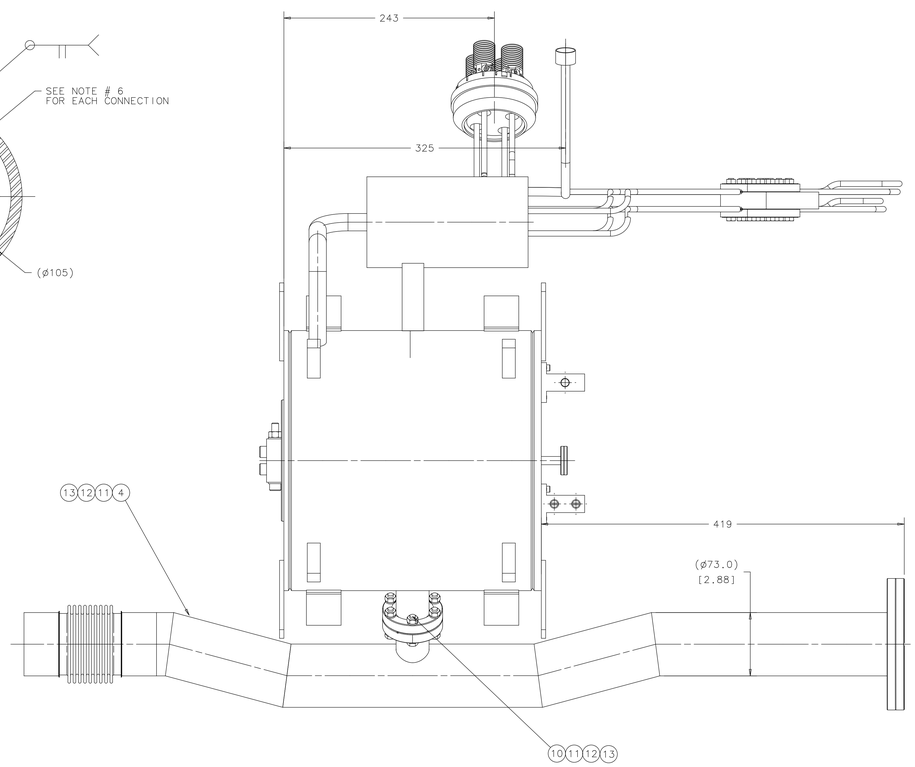

NOTES (UNLESS OTHERWISE SPECIFIED):

1. FABRICATE PER ASME B31.3, NORMAL FLUID SERVICE.
2. THE FOLLOWING DOCUMENTS SHALL BE SUPPLIED WITH DELIVERY OF WELDMENT:
   A. WELD PROCEDURE SPECIFICATION (WPS).
   B. PROCEDURE QUALIFICATION RECORDS (PQR).
   C. WELDER PERFORMANCE QUALIFICATION (WPQ).
   D. EXAMINATION REPORT.
3. LEAK TEST TO BE PERFORMED AT FERMILAB BEFORE ACCEPTANCE.
4. WELDS TO BE VACUUM TIGHT, NO LEAK SHALL BE DETECTABLE ON THE MOST SENSITIVE SCALE OF A HELIUM DETECTOR WITH A MIN SENSITIVITY OF 2 X 10^{-9} ATM. CC/SEC.
5. INTERIOR WELDS TO BE AS SMOOTH AS POSSIBLE, FINISH GRIND SMOOTH MAY BE REQUIRED TO OBTAIN A SMOOTH TRANSITION.
6. SOLDER WIRES CONNECTION. LENGTH OF SOLDERING ~20MM. INSULATE SOLDERED CONNECTION WITH KAPTON TUBE.
7. ASSEMBLY MUST BE FREE FROM DIRT, GREASE, OIL AND CHIPS; AND PROPERLY PACKED TO AVOID DAMAGE TO FLANGES SEALING SURFACES.

ITEM	P.I.N.	DESCRIPTION	QTY
18	COM'L	DOWEL PIN M4 X 12; 18-8 SS McMASTER-CARR # 91585A083, OR EQ.	4
17	COM'L	SHCS M4 X 12; 18-8 SS McMASTER-CARR # 91292A117, OR EQ.	2
16	864915	SCREW ADJUSTMENT	3
15	864895	BLOCK MOUNTING 2-HOLE	1
14	864905	BLOCK MOUNTING 1-HOLE	1
13	COM'L	FLAT WASHER 1/4"; 18-8 SS McMASTER-CARR # 92141A029, OR EQ.	12
12	COM'L	HEX NUT 1/4"-20; SILICON BRONZE McMASTER-CARR # 93439A610, OR EQ.	6
11	COM'L	HHCS 1/4"-20X1-1/2" ST.STEEL 316 McMASTER-CARR # 92186A546, OR EQ.	6
10	COM'L	GASKET COPPER MDC P/N 191006, OR EQ.	1
9	COM'L	FLAT WASHER M8; 18-8 SS McMASTER-CARR # 93475A270, OR EQ.	2
8	COM'L	HEX NUT M8; 18-8 SS McMASTER-CARR # 91828A410, OR EQ.	1
7	COM'L	SHCS M8 X 70 18-8 SS McMASTER-CARR # 91292A211, OR EQ.	1
6	COM'L	SHCS M6 X 30 18-8 SS McMASTER-CARR # 91292A139, OR EQ.	4
5	857435	PLATE INVAR ROD HOLDER	1
4	858455	PIPE 2-PHASE DIPOLE-MAG WLDMT	1
3	858235	LINE DIPOLE-MAG CONTROL	1
2	857525	CURRENT LEADS DIPOLE-MAG ASSY	1
1	858535	He VESSEL XFEL MAG WLDMT	1

PARTS LIST

NEXT ASSY	USED ON
-	-

APPLICATION

FINISH: N/A

MATERIAL: SEE PARTS LIST

UNLESS OTHERWISE SPECIFIED:
DIMENSIONS ARE IN MILLIMETERS
INTERPRET DIM PER ASME Y14.5M-1994
BREAK ALL SHARP EDGES .75 MAX.
ALL MACH. SURFACES 3.2 MAX.

TOLERANCES: X ± 2, .X ± 0.8, .XX ± 0.13, ANGLE ± 1°

THIRD ANGLE PROJECTION

		DATE
DRAWN BY	Y.ORLOV	21OCT08
CHECKED BY	D. ARNOLD	24FEB09
ENGINEERED BY	H. CARTER	26FEB09
DATABASE	DESY EDMS	TEAM/GROUP: T4CM CRYOMODULE
CAD	I-DEAS	SOLID MODEL NO. N/A

FERMI NATIONAL ACCELERATOR LABORATORY
UNITED STATES DEPARTMENT OF ENERGY
P.O. BOX 500, BATAVIA, IL 60510-0500

TITLE
CM2 CRYOMODULE
CM2 DIPOLE
XFEL_D-MAG_WITH_CORRECT_ASSY

SIZE	CAGE CODE	DWG NO.	REV
A0	0U5R6	D00000000858545	A

SCALE 1:2.5 | DO NOT SCALE DRAWING | SHEET 1 OF 1

Created: 15:37:38 on 27-02-09 (D-M-Y) By: orlov State: 1-INITIAL

NOTES (UNLESS OTHERWISE SPECIFIED):

1. FABRICATE PER ASME "BOILER & PRESSURE VESSEL CODE", SECTION VIII, DIVISION 1.
2. THE FOLLOWING DOCUMENTS SHALL BE SUPPLIED WITH DELIVERY OF WELDMENT:
   A. WELD PROCEDURE SPECIFICATION (WPS).
   B. PROCEDURE QUALIFICATION RECORDS (PQR).
   C. WELDER PERFORMANCE QUALIFICATION (WPQ).
   D. EXAMINATION REPORT.
3. LEAK TEST TO BE PERFORMED AT FERMILAB BEFORE ACCEPTANCE.
4. WELDS TO BE VACUUM TIGHT, NO LEAK SHALL BE DETECTABLE ON THE MOST SENSITIVE SCALE OF A HELIUM DETECTOR WITH A MIN SENSITIVITY OF 2 X 10^{-10} ATM. CC/SEC.
5. INTERIOR WELDS TO BE AS SMOOTH AS POSSIBLE, FINISH GRIND SMOOTH MAY BE REQUIRED TO OBTAIN A SMOOTH TRANSITION.
6. ASSEMBLY MUST BE FREE FROM DIRT, GREASE, OIL AND CHIPS; AND PROPERLY PACKED TO AVOID DAMAGE TO FLANGES SEALING SURFACES.

REVISION HISTORY

CAD MAINTAINED. CHANGES SHALL BE INCORPORATED BY THE DESIGN ACTIVITY.

ZONE	REV	DESCRIPTION	DATE	APPROVED
	A	INITIAL RELEASE - ER # ILC-000010		
H12	B	ECO # ILC-00013 CHANGE NOTE 1	19MAR09	D. MITCHELL
B3, B8 G5, H8	C	ECO# ILC-000098 CHANGED ITEM #3, DELETED FOAM 2X DELETED FOAM	30MAR10	Y. ORLOV

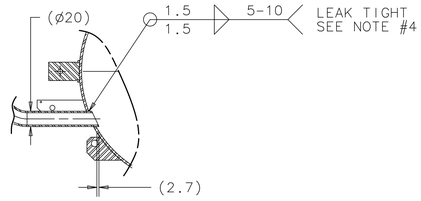

SECTION B-B
SCALE 1:4

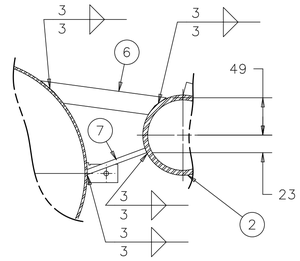

SECTION C-C
SCALE 1:4

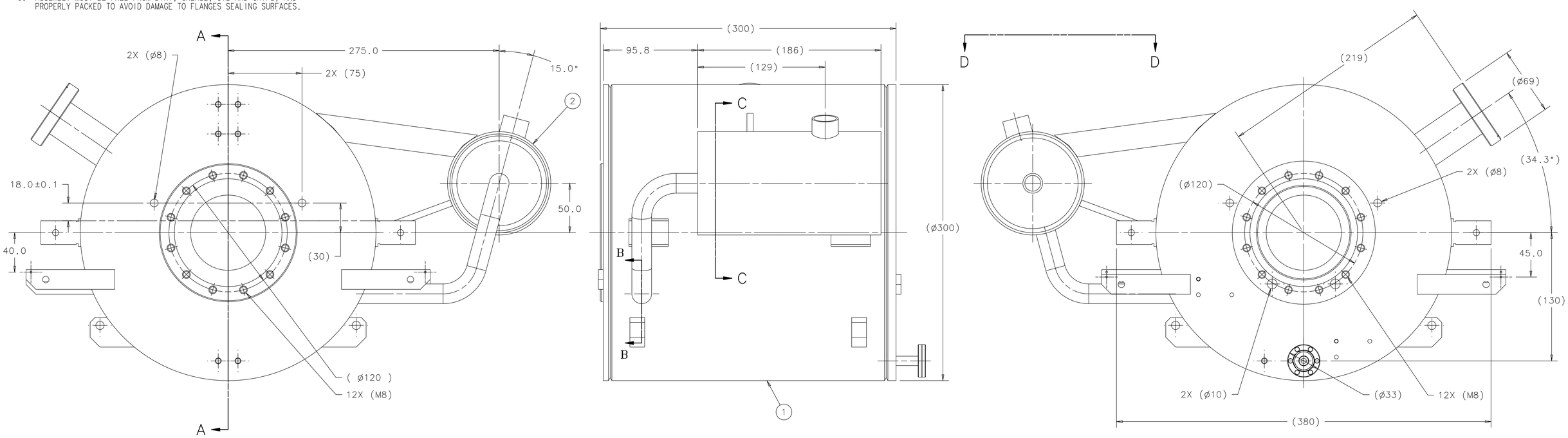

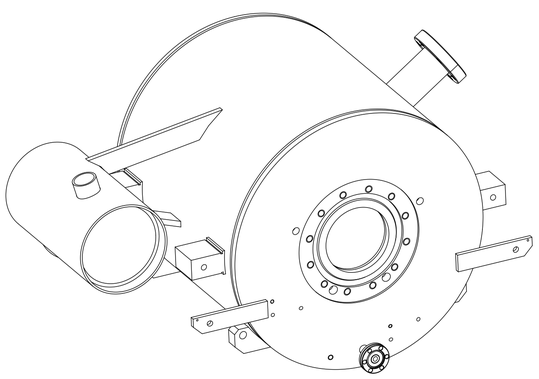

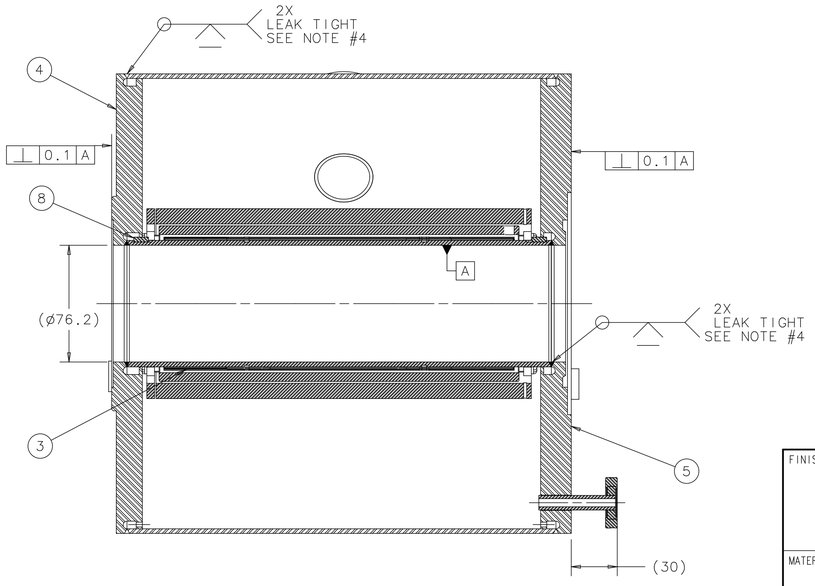

SECTION A-A

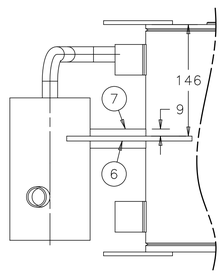

VIEW D-D
SCALE 1:4

ITEM	P.I.N.	DESCRIPTION	QTY
8	COM'L	KEY STOCK UNDESIZED, 1/8" X 1/8"; 3/8 LENGTH, McMASTER-CARR # 92530A100	2
7	857355	SUPPORT BAR LOWER	1
6	857365	SUPPORT BAR UPPER	1
5	861475	FLANGE XFEL VESSEL DS WLDMT	1
4	861615	FLANGE XFEL VESSEL US WLDMT	1
3	MD460856	DIPOLE CORRECTOR ASSEMBLY	1
2	857375	BOX INSTR LEADS CONNECT WLDMT	1
1	857305	SHELL DIPOLE WLDMT	1

PARTS LIST

-	858545
NEXT ASSY	USED ON
APPLICATION	

FINISH: N/A

MATERIAL: SEE PARTS LIST

UNLESS OTHERWISE SPECIFIED:
DIMENSIONS ARE IN MILLIMETERS
INTERPRET DIM PER ASME Y14.5M-1994
BREAK ALL SHARP EDGES .75 MAX.
ALL MACH. SURFACES 3.2 MAX.

TOLERANCES: X ± 1, .X ± 0.5, .XX ± --, ANGLE ± 1°

THIRD ANGLE PROJECTION

DRAWN BY Y.ORLOV	DATE 21OCT08	
CHECKED BY D. ARNOLD	DATE 24FEB09	
ENGINEERED BY H. CARTER	DATE 26FEB09	
DATABASE DESY EDMS	TEAM/GROUP T4CM CRYOMODULE	
CAD I-DEAS	SOLID MODEL NO. D00000000637553	

FERMI NATIONAL ACCELERATOR LABORATORY
UNITED STATES DEPARTMENT OF ENERGY
P.O. BOX 500, BATAVIA, IL 60510-0500

TITLE
CM2 CRYOMODULE
CM2 DIPOLE
HE_VESSEL_XFEL_MAG_WLDMT

SIZE	CAGE CODE	DWG NO.	REV
A1	0U5R6	D00000000858535	C

SCALE 1:2 | DO NOT SCALE DRAWING | SHEET 1 OF 1

Created: 14:37:56 on 30-03-10 (D-M-Y) By: bschmitz State: 1-INITIAL

REVISION HISTORY CAD MAINTAINED. CHANGES SHALL BE INCORPORATED BY THE DESIGN ACTIVITY.				
ZONE	REV	DESCRIPTION	DATE	APPROVED
	A	INITIAL RELIASE -ER # ILC-000010		
7-C 8-A	B	ECO# ILC-000042 FEATURE CHANGE TO FLANGE ADDED C3 DIM MOVED NOTES	11NOV09	D. MITCHELL
5-A		ADDED NEW USED ON		

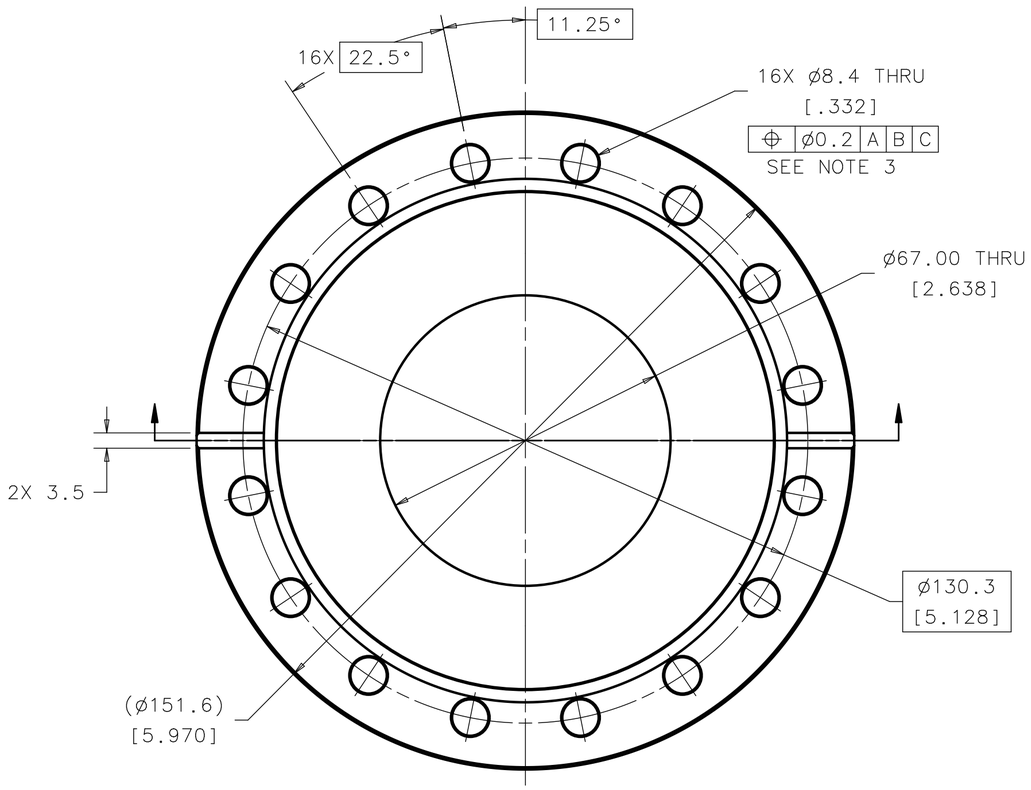

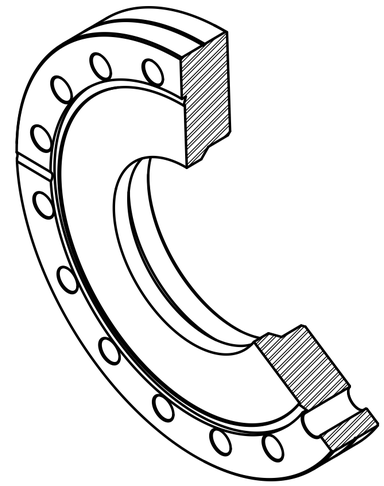

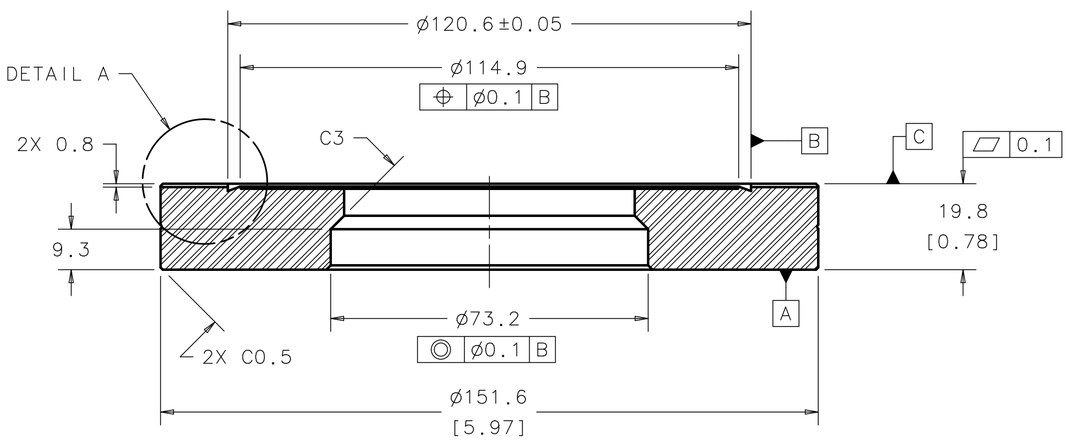

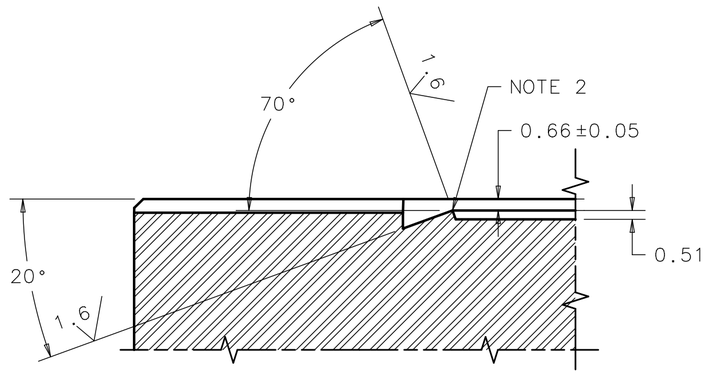

DETAIL A
SCALE 4:1

NOTES (UNLESS OTHERWISE SPECIFIED):

1. SEALING SURFACES MUST BE FREE OF ANY SCRATCHES WITH NO RADIAL SCORING.
2. DO NOT BREAK OR DENT SHARP EDGES.
3. HOLES TO HAVE A 0.2-0.3 X 45° CHAMFER ON BOTH SIDE TO REMOVE BURRS.
4. PART MUST BE FREE OF DIRT, GREASE, OIL AND CHIPS.
5. DIMENSIONS IN [ ] ARE IN INCHES

-	789555
-	858455
NEXT ASSY	USED ON
APPLICATION	

FINISH

MATERIAL: TITANIUM GRADE 2

UNLESS OTHERWISE SPECIFIED:
DIMENSIONS ARE IN MILLIMETERS
INTERPRET DIM PER ASME Y14.5M-1994
BREAK ALL SHARP EDGES .75 MAX.
ALL MACH. SURFACES 3.2 MAX.

TOLERANCES: X ± - ; .X ± 0.5 ; .XX ± 0.10 ; ANGLE ± 1°

THIRD ANGLE PROJECTION

DRAWN BY: Y. ORLOV	DATE: 20OCT09	
CHECKED BY: D. ARNOLD	DATE: 24FEB09	
ENGINEERED BY: Y. ORLOV	DATE: 25FEB09	
DATABASE: DESY EDMS	TEAM/GROUP: T4CM CRYOMODULE	
CAD: I-DEAS	SOLID MODEL NO.: D00000001025652	

FERMI NATIONAL ACCELERATOR LABORATORY
UNITED STATES DEPARTMENT OF ENERGY
P.O. BOX 500, BATAVIA, IL 60510-0500

TITLE
CM2 CRYOMODULE
CM2 DIPOLE
FLANGE_CF_DEL_SEAL_6

SIZE	CAGE CODE	DWG NO.	REV
A2	0U5R6	D00000000858525	B

SCALE 1:1 | DO NOT SCALE DWG | SHEET OF 1

Created: 14:00:27 on 11-11-09 (D-M-Y) By: victormm State: 1-INITIAL

REVISION HISTORY CAD MAINTAINED. CHANGES SHALL BE INCORPORATED BY THE DESIGN ACTIVITY.				
ZONE	REV	DESCRIPTION	DATE	APPROVED
	A	INITIAL RELEASE - ER # ILC-000010		
	B	ECO # ILC-00015	09APOR09	Y. ORLOV
D5		(2.8) WAS (2.0)		
C5		R36.5 WAS R33.5		
B5		(ø36.5) WAS (ø38.1)		
A4		CNANGED MATERIAL		

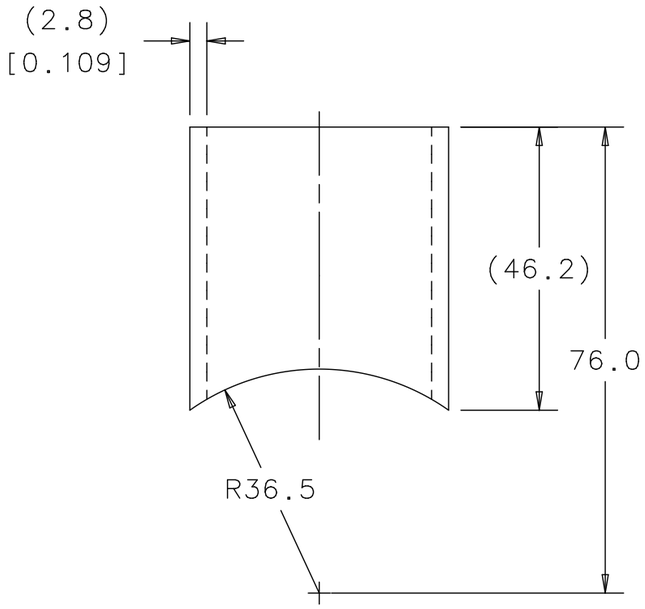

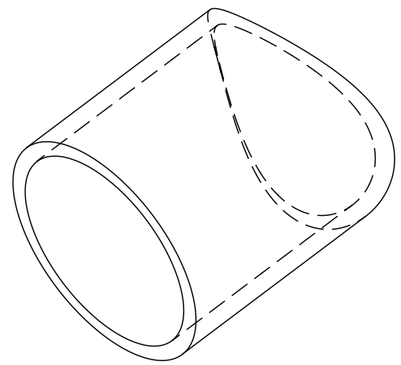

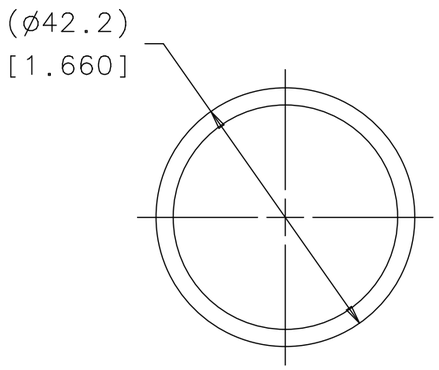

NOTES (UNLESS OTHERWISE SPECIFIED):

1. DIMENSIONS IN [ ] ARE IN INCHES.
2. PART MUST BE FREE OF DIRT, GREASE, OIL AND CHIPS.

ITEM	P.I.N.	DESCRIPTION	QTY

PARTS LIST

-	858455
NEXT ASSY	USED ON
APPLICATION	

FINISH: N/A

UNLESS OTHERWISE SPECIFIED:
DIMENSIONS ARE IN MILLIMETERS
INTERPRET DIM PER ASME Y14.5M-1994
BREAK ALL SHARP EDGES .75 MAX.
ALL MACH. SURFACES 3.2 MAX.

MATERIAL: 1-1/4", SCHED-10 PIPE TITANIUM, GRADE 2

TOLERANCES: X ± - ; .X ± 0.5 ; .XX ± - ; ANGLE ± -

THIRD ANGLE PROJECTION

DRAWN BY Y.ORLOV	DATE 20OCT08	
CHECKED BY D. ARNOLD	DATE 24FEB09	
ENGINEERED BY Y.ORLOV	DATE 25FEB09	
DATABASE DESY EDMS	TEAM/GROUP T4CM CRYOMODULE	
CAD I-DEAS	SOLID MODEL NO. D00000001025612	

FERMI NATIONAL ACCELERATOR LABORATORY
UNITED STATES DEPARTMENT OF ENERGY
P.O. BOX 500, BATAVIA, IL 60510-0500

TITLE
CM2 CRYOMODULE
CM2 DIPOLE
TUBE_CONNECT_DIPOLE_TO_2-PHASE

SIZE	CAGE CODE	DWG NO.	REV
A3	0U5R6	D00000000858515	B

SCALE 1:1 | DO NOT SCALE DWG | SHEET 1 OF 1

Created: 16:15:03 on 09-04-09 (D-M-Y) By: orlov State: 1-4NITIAL

REVISION HISTORY CAD MAINTAINED. CHANGES SHALL BE INCORPORATED BY THE DESIGN ACTIVITY.				
ZONE	REV	DESCRIPTION	DATE	APPROVED
	A	INITIAL RELEASE - ER # ILC-000010		

NOTES (UNLESS OTHERWISE SPECIFIED):

1. DIMENSIONS IN [ ] ARE IN INCHES.
2. PART MUST BE FREE OF DIRT, GREASE, OIL AND CHIPS.

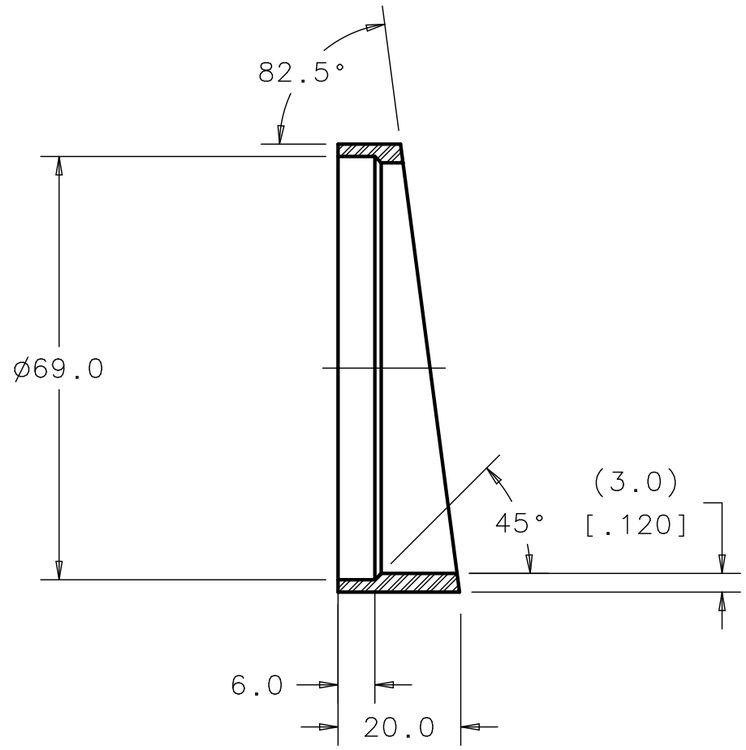

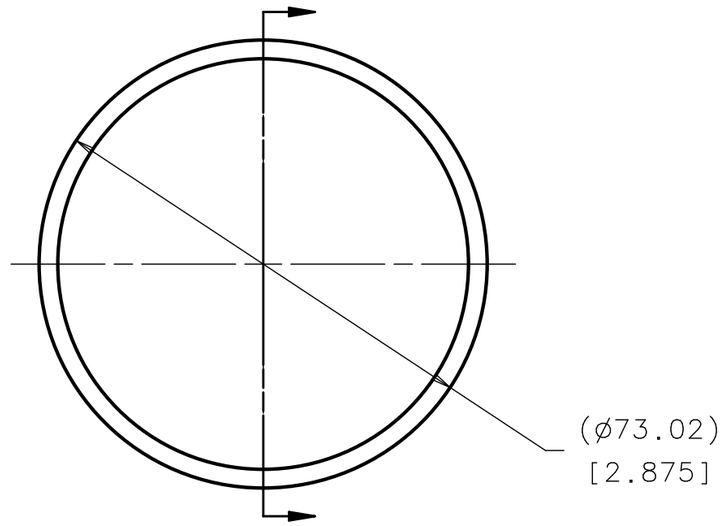

ITEM	P.I.N.	DESCRIPTION	QTY

PARTS LIST

-	858455
NEXT ASSY	USED ON
APPLICATION	

FINISH: N/A

MATERIAL: 2-1/2" SCHED 10 PIPE TITANIUM, GRADE 2

UNLESS OTHERWISE SPECIFIED:
DIMENSIONS ARE IN MILLIMETERS
INTERPRET DIM PER ASME Y14.5M-1994
BREAK ALL SHARP EDGES .75 MAX.
ALL MACH. SURFACES 3.2 MAX.

TOLERANCES: X ± ; .X ± 0.5 ; .XX ± - ; ANGLE ± 0.5°

THIRD ANGLE PROJECTION

DRAWN BY: Y.ORLOV	DATE: 10OCT08	
CHECKED BY: D. ARNOLD	DATE: 24FEB09	
ENGINEERED BY: Y. ORLOV	DATE: 25FEB09	
DATABASE: DESY EDMS	TEAM/GROUP: T4CM CRYOMODULE	
CAD: I-DEAS	SOLID MODEL NO.: N/A	

FERMI NATIONAL ACCELERATOR LABORATORY
UNITED STATES DEPARTMENT OF ENERGY
P.O. BOX 500, BATAVIA, IL 60510-0500

TITLE: CM2 CRYOMODULE
CM2 DIPOLE
PIPE_2-PHASE_DIPOLE-4

SIZE	CAGE CODE	DWG NO.	REV
A3	0U5R6	D00000000858505	A

SCALE 1:1 | DO NOT SCALE DWG | SHEET 1 OF 1

NOTES (UNLESS OTHERWISE SPECIFIED):

1. DIMENSIONS IN [ ] ARE IN INCHES.
2. PART MUST BE FREE OF DIRT, GREASE, OIL AND CHIPS.

REVISION HISTORY

CAD MAINTAINED. CHANGES SHALL BE INCORPORATED BY THE DESIGN ACTIVITY.

ZONE	REV	DESCRIPTION	DATE	APPROVED
	A	INITIAL RELEASE - ER # ILC-000010		

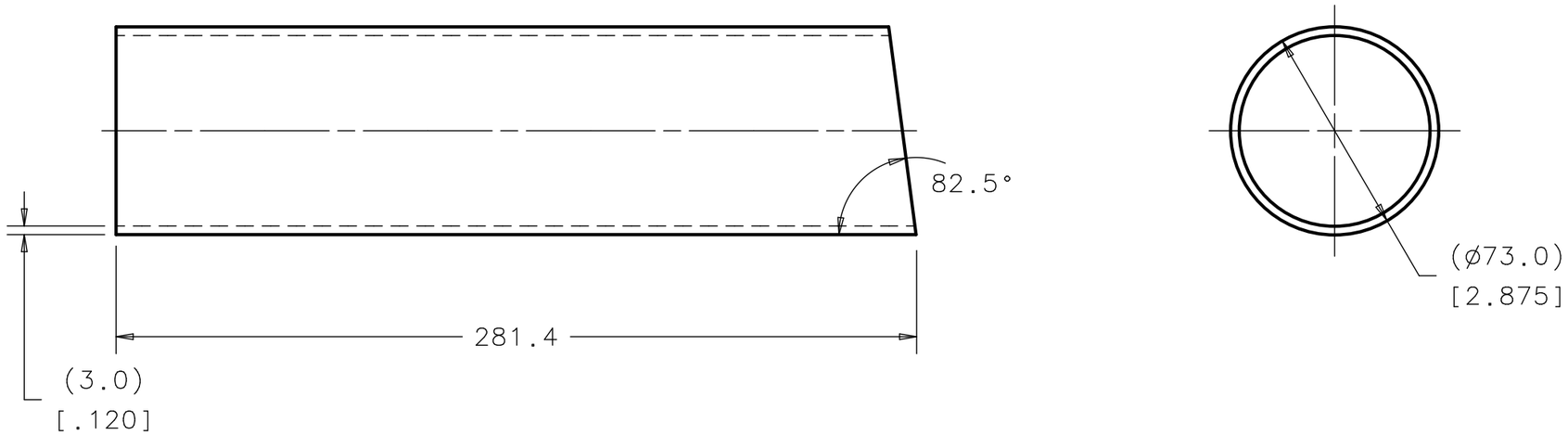

ITEM	P.I.N.	DESCRIPTION	QTY

PARTS LIST

-	858455
NEXT ASSY	USED ON

APPLICATION

FINISH: N/A

MATERIAL: 2-1/2" SCHED 10 PIPE TITANIUM, GRADE 2

UNLESS OTHERWISE SPECIFIED:
DIMENSIONS ARE IN MILLIMETERS
INTERPRET DIM PER ASME Y14.5M-1994
BREAK ALL SHARP EDGES .75 MAX.
ALL MACH. SURFACES 3.2 MAX.

TOLERANCES: X ± - ; .X ± 0.5 ; .XX ± - ; ANGLE ± 0.5°

THIRD ANGLE PROJECTION

DRAWN BY Y.ORLOV	DATE 20OCT08		
CHECKED BY D. ARNOLD	DATE 24FEB09		
ENGINEERED BY Y. ORLOV	DATE 25FEB09		
DATABASE DESY EDMS	TEAM/GROUP T4CM CRYOMODULE		
CAD I-DEAS	SOLID MODEL NO. N/A		

FERMI NATIONAL ACCELERATOR LABORATORY
UNITED STATES DEPARTMENT OF ENERGY
P.O. BOX 500, BATAVIA, IL 60510-0500

TITLE
CM2 CRYOMODULE
CM2 DIPOLE
PIPE_2-PHASE_DIPOLE-3

SIZE	CAGE CODE	DWG NO.	REV
A3	0U5R6	D00000000858495	A

SCALE 1:2 | DO NOT SCALE DWG | SHEET 1 OF 1

Created: 16:58:01 on 27-02-09 (D-M-Y) By: orlov State: 1-4INITIAL

NOTES (UNLESS OTHERWISE SPECIFIED):

1. DIMENSIONS IN [ ] ARE IN INCHES.
2. PART MUST BE FREE OF DIRT, GREASE, OIL AND CHIPS.

REVISION HISTORY
CAD MAINTAINED. CHANGES SHALL BE INCORPORATED BY THE DESIGN ACTIVITY.

ZONE	REV	DESCRIPTION	DATE	APPROVED
	A	INITIAL RELEASE - ER # ILC-000010		
B3	B	ECO # ILC-00015 ø36.6 WAS ø38.2	09APR09	Y. ORLOV

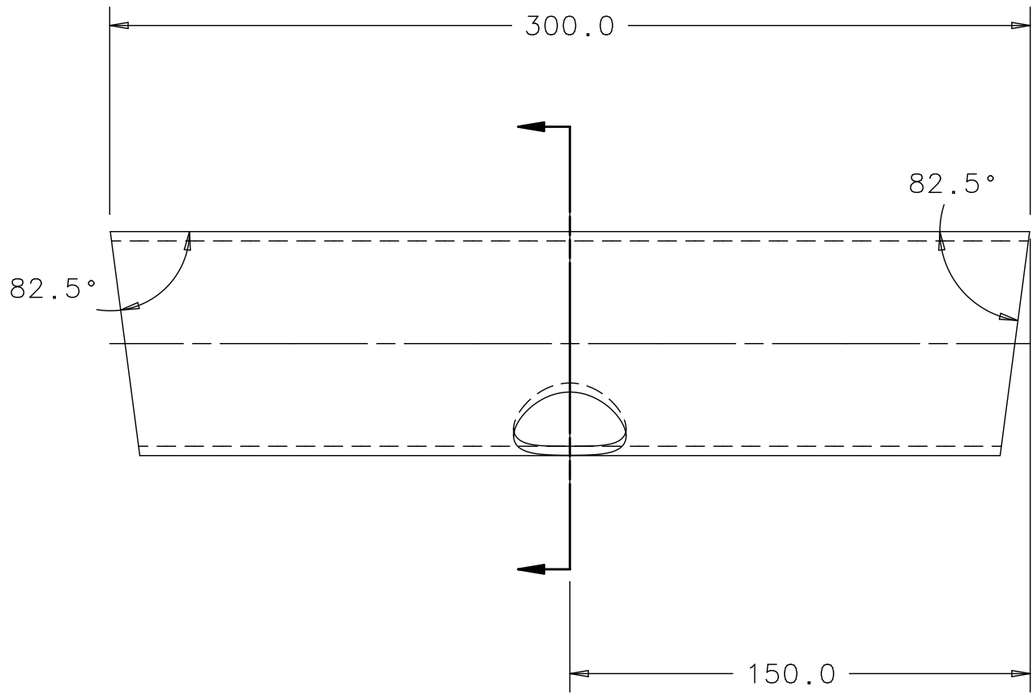

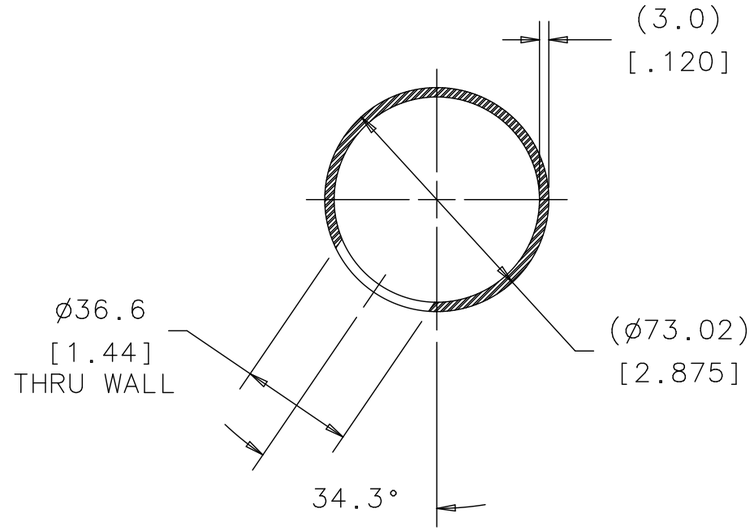

-	858455
NEXT ASSY	USED ON
APPLICATION	

FINISH: N/A

UNLESS OTHERWISE SPECIFIED:
DIMENSIONS ARE IN MILLIMETERS
INTERPRET DIM PER ASME Y14.5M-1994
BREAK ALL SHARP EDGES .75 MAX.
ALL MACH. SURFACES 3.2 MAX.

MATERIAL: 2-1/2"-SCHED 10 PIPE TITANIUM, GRADE 2

TOLERANCES: X ± ; .X ± 0.5 ; .XX ± - ; ANGLE ± 0.5'

THIRD ANGLE PROJECTION

DRAWN BY Y.ORLOV	DATE 20OCT08	
CHECKED BY D. ARNOLD	DATE 24FEB09	
ENGINEERED BY Y. ORLOV	DATE 25FEB09	
DATABASE DESY EDMS	TEAM/GROUP T4CM CRYOMODULE	
CAD I-DEAS	SOLID MODEL NO. D00000001025632	

FERMI NATIONAL ACCELERATOR LABORATORY
UNITED STATES DEPARTMENT OF ENERGY
P.O. BOX 500, BATAVIA, IL 60510-0500

TITLE
CM2 CRYOMODULE
CM2 DIPOLE
PIPE_2-PHASE_DIPOLE-2

SIZE	CAGE CODE	DWG NO.	REV
A3	0U5R6	D00000000858485	B

SCALE 1:2 | DO NOT SCALE DWG | SHEET 1 OF 1

Created: 16:14:13 on 09-04-09 (D-M-Y) By: orlov State: 1-4INITIAL

REVISION HISTORY CAD MAINTAINED. CHANGES SHALL BE INCORPORATED BY THE DESIGN ACTIVITY.				
ZONE	REV	DESCRIPTION	DATE	APPROVED
	A	INITIAL RELEASE - ER # ILC-000010		

NOTES (UNLESS OTHERWISE SPECIFIED):

1. DIMENSIONS IN [ ] ARE IN INCHES.
2. PART MUST BE FREE OF DIRT, GREASE, OIL AND CHIPS.

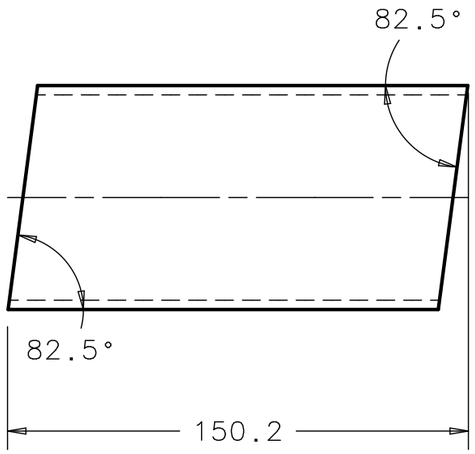

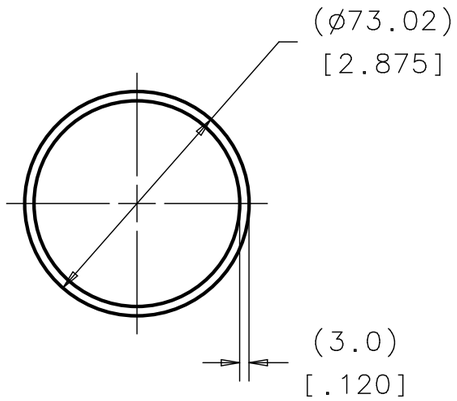

ITEM	P.I.N.	DESCRIPTION	QTY

PARTS LIST

-	858455
NEXT ASSY	USED ON
APPLICATION	

FINISH N/A	UNLESS OTHERWISE SPECIFIED: DIMENSIONS ARE IN MILLIMETERS INTERPRET DIM PER ASME Y14.5M-1994 BREAK ALL SHARP EDGES .75 MAX. ALL MACH. SURFACES 3.2 MAX.	DRAWN BY Y.ORLOV	DATE 20OCT08
		CHECKED BY D. ARNOLD	DATE 24FEB09
		ENGINEERED BY Y. ORLOV	DATE 25FEB09
MATERIAL 2-1/2" SCHED 10 PIPE TITANIUM, GRADE 2	TOLERANCES X ± - .X ± 0.5 .XX ± - ANGLE ± .5°	THIRD ANGLE PROJECTION	DATABASE DESY EDMS / TEAM/GROUP
			CAD I-DEAS / SOLID MODEL NO. N/A

FERMI NATIONAL ACCELERATOR LABORATORY
UNITED STATES DEPARTMENT OF ENERGY
P.O. BOX 500, BATAVIA, IL 60510-0500

TITLE
CM2 CRYOMODULE
CM2 DIPOLE
PIPE_2-PHASE_DIPOLE-1

SIZE	CAGE CODE	DWG NO.	REV
A3	0U5R6	D00000000858475	A
SCALE 1:2	DO NOT SCALE DWG	SHEET 1 OF 1	

Created: 16:55:49 on 27-02-09 (D-M-Y) By: orlov State: 1-4INITIAL

REVISION HISTORY CAD MAINTAINED. CHANGES SHALL BE INCORPORATED BY THE DESIGN ACTIVITY.				
ZONE	REV	DESCRIPTION	DATE	APPROVED
	A	INITIAL RELEASE - ER # ILC-000010		
A8	B	ECO# ILC-000069 ADD NOTE 6	01-FEB-2010	Y. ORLOV

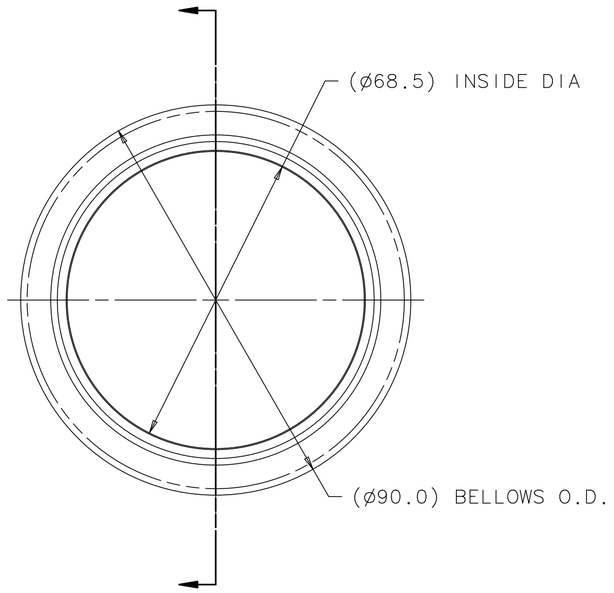

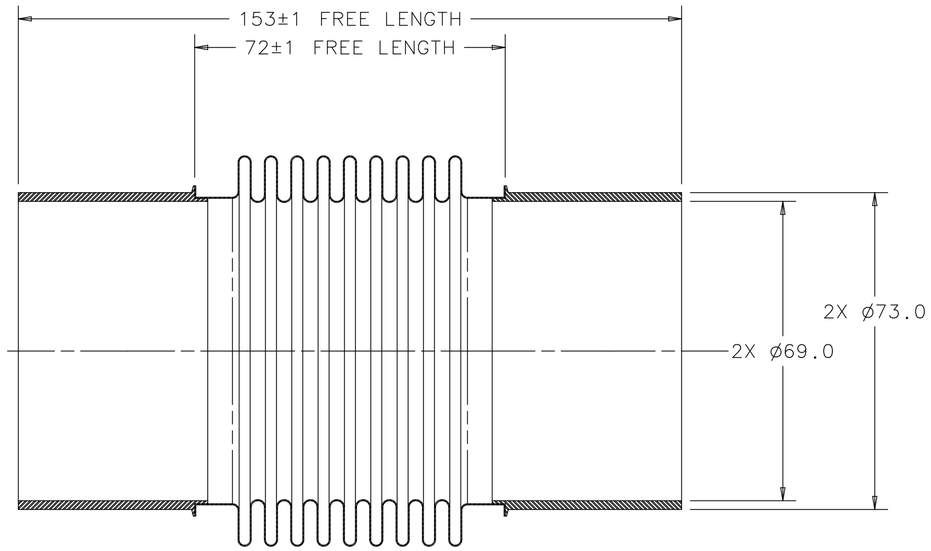

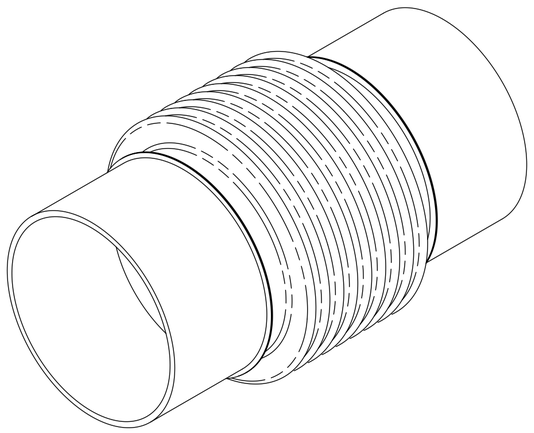

NOTES (UNLESS OTHERWISE SPECIFIED):

1. HYDROFORMED BELLOWS MUST BE CAPABLE OF ±5MM MINIMUM LENGTH CHANGE FOR MAXIMUM OF 10,000 CYCLES. BELLOWS CONSTRUCTED FROM TITANIUM, GRADE 2 SHEET, MINIMUM THICKNESS OF 0.13MM [.005"], MAXIMUM THICKNESS OF 0.20MM [.008"].
2. ALL WELDS TO BE VACUUM TIGHT. NO LEAK SHALL BE DETECTABLE ON THE MOST SENSITIVE SCALE OF A HELIUM LEAK DETECTOR WITH A MINIMUM SENSITIVITY OF 2 X 10^{-10} ATM. CC/SEC.
3. DESIGN DETAILS SHOWN HERE ARE FOR REFERENCE ONLY. NON DIMENSIONED FEATURES CAN BE FABRICATED AT THE VENDOR'S DISCRETION.
4. PART MUST BE FREE DIRT, GREASE, OIL AND CHIPS.
5. MATERIAL CERTIFICATION WILL BE REQUIRED UPON DELIVERY OF BELLOWS WELDMENT ASSEMBLY.
6. OPERATING PRESSURE:

   6.a 4 BAR WITH 2K
   6.b 2 BAR WITH 293K

ITEM	P.I.N.	DESCRIPTION	QTY

PARTS LIST

FINISH N/A	UNLESS OTHERWISE SPECIFIED: DIMENSIONS ARE IN MILLIMETERS INTERPRET DIM PER ASME Y14.5M-1994 BREAK ALL SHARP EDGES .75 MAX. ALL MACH. SURFACES 3.2 MAX.	DRAWN BY Y.ORLOV	DATE 20OCT08
		CHECKED BY D. ARNOLD	DATE 24FEB09
		ENGINEERED BY Y. ORLOV	DATE 25FEB09
MATERIAL AS NOTED	TOLERANCES X ± - .X ± 0.5 .XX ± - ANGLE ± -	THIRD ANGLE PROJECTION	DATABASE DESY EDMS / TEAM/GROUP T4CM CRYOMODULE
			CAD I-DEAS / SOLID MODEL NO. D00000000709493

-	858455
NEXT ASSY	USED ON
APPLICATION	

FERMI NATIONAL ACCELERATOR LABORATORY
UNITED STATES DEPARTMENT OF ENERGY
P.O. BOX 500, BATAVIA, IL 60510-0500

TITLE
CM2 CRYOMODULE
CM2 DIPOLE
BELLOW_WELDMENT_HE_PIPE

SIZE	CAGE CODE	DWG NO.	REV
A2	0U5R6	D00000000858465	B

SCALE 1:1 | DO NOT SCALE DWG | SHEET 1 OF 1

Created: 11:59:40 on 01-02-10 (D-M-Y) By: orlov State: 1-INITIAL

REVISION HISTORY CAD MAINTAINED. CHANGES SHALL BE INCORPORATED BY THE DESIGN ACTIVITY.				
ZONE	REV	DESCRIPTION	DATE	APPROVED
	A	INITIAL RELEASE - ER # ILC-000010		
E2 F1 B3	B	ECO # ILC-00015 CHANGED WELD SYNBOLS CHANGED WELD SYMBOLS CHANGED P.I.N. AND DISCRIPTION ITEM 8	09APR09	Y. ORLOV

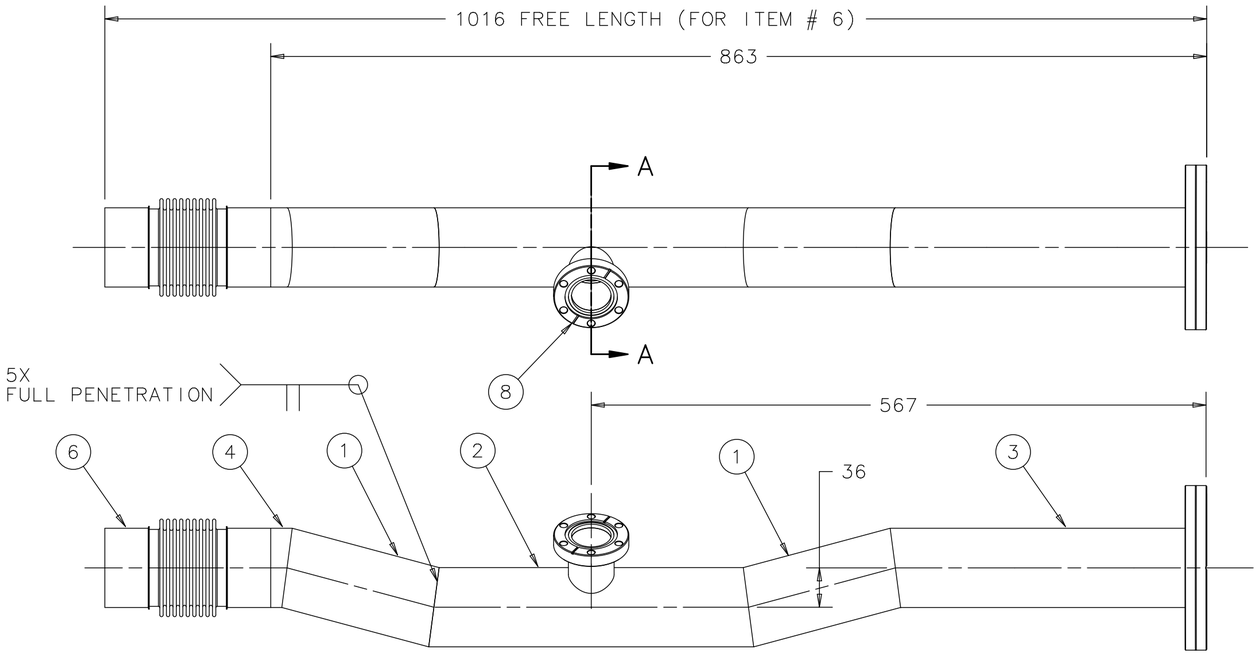

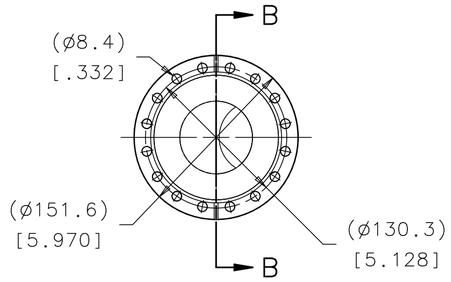

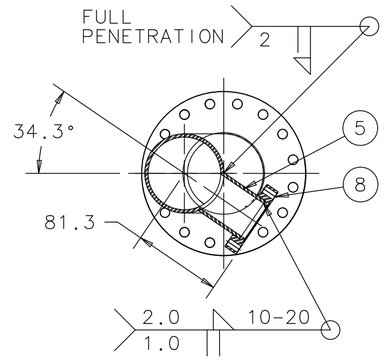

SECTION A-A

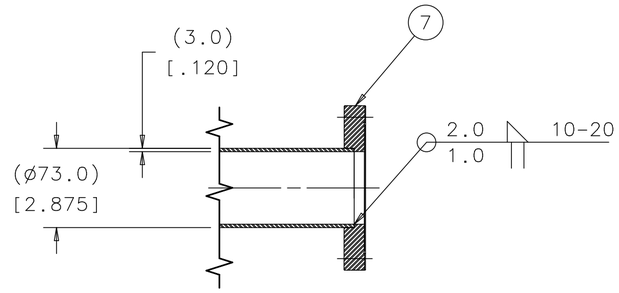

SECTION B-B

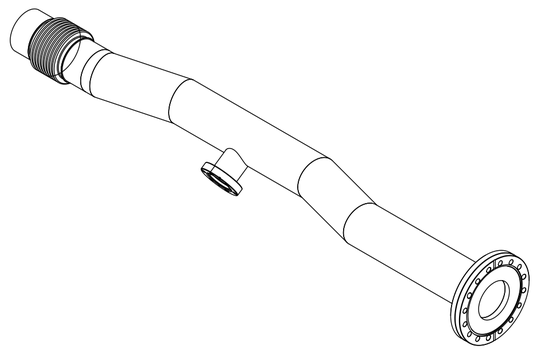

NOTES (UNLESS OTHERWISE SPECIFIED):

1. ALL FILLET WELDS TO BE SMOOTH FOR COSMETIC APPEARANCE.
2. FABRICATE PER ASME B31.3, NORMAL FLUID SERVICE.
3. THE FOLLOWING DOCUMENTS SHALL BE SUPPLIED WITH DELIVERY OF WELDMENT:
   A. WELD PROCEDURE SPECIFICATION (WPS)
   B. PROCEDURE QUALIFICATION RECORDS (PQR)
   C. WELDER PERFORMANCE QUALIFICATION (WPC)
   D. EXAMINATION RECORD.
4. LEAK TEST TO BE PERFORMED AT FERMILAB BEFORE ACCEPTANCE.
5. ALL WELDS TO BE VACUUM TIGHT. NO LEAK SHALL BE DETECTABLE ON THE MOST SENSITIVE SCALE OF A HELIUM DETECTOR WITH A MINIMUM SENSITIVITY OF 2 x 10^{-10} ATM. CC/SEC.
6. ALL CLEANING AND WELDIND PROCEDURES WILL CONFORM TO THE AMERICAN WELDING SOCIETY SPECIFICATION: AWS G2.4/G2.4M: 2007, "GUIDE FOR THE FUSION WELDING OF TITANIUM AND TITANIUM ALLOYS".
7. WELDERS MUST BE QUALIFIED AND CERTIFIED IN TITANIUM WELDING. VERIFICATION DOCUMENTS FOR EACH WELDER MUST BE SUPPLIED TO FERMILAB FOR WRITTEN APPROVAL PRIOR TO ANY PRODUCT WELDING.
8. ALL WELDS MUST BE PERFORMED IN AN ARGON FILLED GLOVEBOX WITH AN OXYGEN COUNT OF 30 PPM OR LESS.
9. THE VENDOR'S WRITTEN PROCEDURE DESCRIBING THE CLEANING AND WELDING PROCEDURES MUST BE SUPPLIED TO FERMILAB FOR WRITTEN APPROVAL PRIOR TO ANY PRODUCT WELDING. AT FERMILAB, THIS PROCEDURE IS DESCRIBED IN FERMILAB'S ENGINEERING SPECIFICATION 5500-ES-371040, "Technical Specifications for Welding Titanium Helium Vessel at Fermilab".
10. INSPECTION OF FINAL PRODUCT WILL BE CONDUCTED AT FERMILAB PRIOR TO ANY ULTRASONIC OR WIRE-BRUSH CLEANING. DO NOT MODIFY THE FINAL WELDS PRIOR TO PRODUCT ACCEPTANCE.
11. MATERIAL CERTIFICATION IS REQUIRED AND MUST BE INCLUDED WITH SHIPPING. THERE WILL BE NO PRODUCT ACCEPTANCE WITHOUT THE PROPER MATERIAL CERTIFICATIONS.
12. ASSEMBLY MUST BE FREE FROM DIRT, GREASE, OIL AND CHIPS; AND PROPERLY PACKAGED TO AVOID DAMAGE TO FLANGE SEALING SURFACES.
13. DIMENSIONS IN [ ] ARE IN INCHES.

ITEM	P.I.N.	DESCRIPTION	QTY
8	872795	FLANGE CF DEL SEAL-2,75"	1
7	858525	FLANGE CF DEL SEAL-6"	1
6	858465	BELLOW WELDMENT HE PIPE	1
5	858515	TUBE CONNECT DIPOLE TO 2-PHASE	1
4	858505	PIPE 2-PHASE DIPOLE-4	1
3	858495	PIPE 2-PHASE DIPOLE-3	1
2	858485	PIPE 2-PHASE DIPOLE-2	1
1	858475	PIPE 2-PHASE DIPOLE-1	2

PARTS LIST

NEXT ASSY	USED ON
858545	857385

APPLICATION

FINISH: N/A

MATERIAL: SEE PARTS LIST

UNLESS OTHERWISE SPECIFIED:
DIMENSIONS ARE IN MILLIMETERS
INTERPRET DIM PER ASME Y14.5M-1994
BREAK ALL SHARP EDGES .75 MAX.
ALL MACH. SURFACES 3.2 MAX.

TOLERANCES: X ± 1, .X ± -, .XX ± -, ANGLE ± 1°

THIRD ANGLE PROJECTION

DRAWN BY Y.ORLOV	DATE 20OCT08		
CHECKED BY D. ARNOLD	DATE 24FEB09		
ENGINEERED BY H. CARTER	DATE 26FEB09		
DATABASE DESY EDMS	TEAM/GROUP T4CM CRYOMODULE		
CAD I-DEAS	SOLID MODEL NO. D00000000707773		

FERMI NATIONAL ACCELERATOR LABORATORY
UNITED STATES DEPARTMENT OF ENERGY
P.O. BOX 500, BATAVIA, IL 60510-0500

TITLE
CM2 CRYOMODULE
CM2 DIPOLE
PIPE_2-PHASE_DIPOLE-MAG_WLDMT

SIZE	CAGE CODE	DWG NO.	REV
A2	0U5R6	D00000000858455	B

SCALE 1:4 | DO NOT SCALE DWG | SHEET 1 OF 1

NOTES (UNLESS OTHERWISE SPECIFIED):

1. PART MUST BE FREE OF DIRT, GREASE, OIL AND CHIPS.

REVISION HISTORY

CAD MAINTAINED. CHANGES SHALL BE INCORPORATED BY THE DESIGN ACTIVITY.

ZONE	REV	DESCRIPTION	DATE	APPROVED
	A	INITIAL RELEASE - ER # ILC-000010		

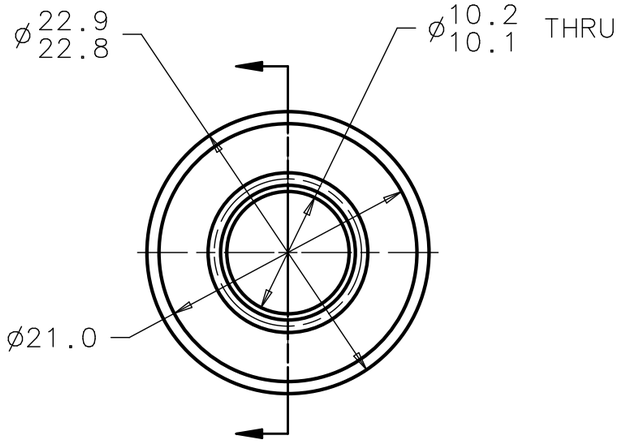

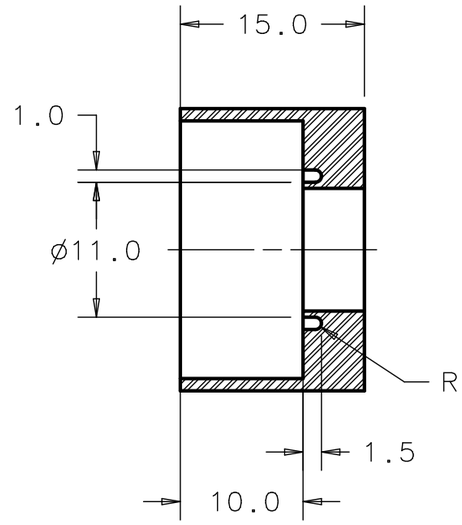

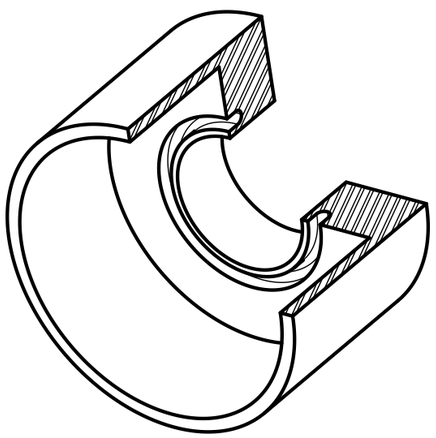

ITEM	P.I.N.	DESCRIPTION	QTY

PARTS LIST

-	858235
NEXT ASSY	USED ON

APPLICATION

FINISH: N/A

MATERIAL: ST.STEEL 316L

UNLESS OTHERWISE SPECIFIED:
DIMENSIONS ARE IN MILLIMETERS
INTERPRET DIM PER ASME Y14.5M-1994
BREAK ALL SHARP EDGES .75 MAX.
ALL MACH. SURFACES 3.2 MAX.

TOLERANCES: X ± - ; .X ± 0.5 ; .XX ± - ; ANGLE ± 1°

THIRD ANGLE PROJECTION

DRAWN BY Y.ORLOV	DATE 17OCT08		
CHECKED BY D. ARNOLD	DATE 24FEB09		
ENGINEERED BY Y. ORLOV	DATE 25FEB09		
DATABASE DESY EDMS	TEAM/GROUP T4CM CRYOMODULE		
CAD I-DEAS	SOLID MODEL NO. N/A		

FERMI NATIONAL ACCELERATOR LABORATORY
UNITED STATES DEPARTMENT OF ENERGY
P.O. BOX 500, BATAVIA, IL 60510-0500

TITLE
CM2 CRYOMODULE
CM2 DIPOLE
WARM_BUSHING_LINE_CONTROL

SIZE	CAGE CODE	DWG NO.	REV
A3	0U5R6	D00000000858335	A

SCALE 2.5:1 | DO NOT SCALE DWG | SHEET 1 OF 1

Created: 16:53:25 on 27-02-09 (D-M-Y) By: orlov State: 1-4NITIAL

NOTES (UNLESS OTHERWISE SPECIFIED):

1. PART MUST BE FREE OF DIRT, GREASE, OIL AND CHIPS.

REVISION HISTORY

CAD MAINTAINED. CHANGES SHALL BE INCORPORATED BY THE DESIGN ACTIVITY.

ZONE	REV	DESCRIPTION	DATE	APPROVED
	A	INITIAL RELEASE - ER # ILC-000010		

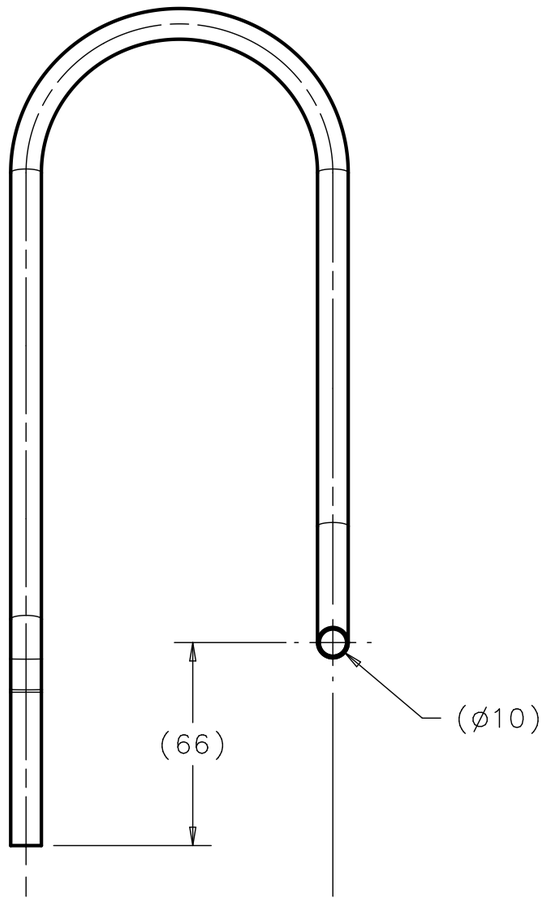

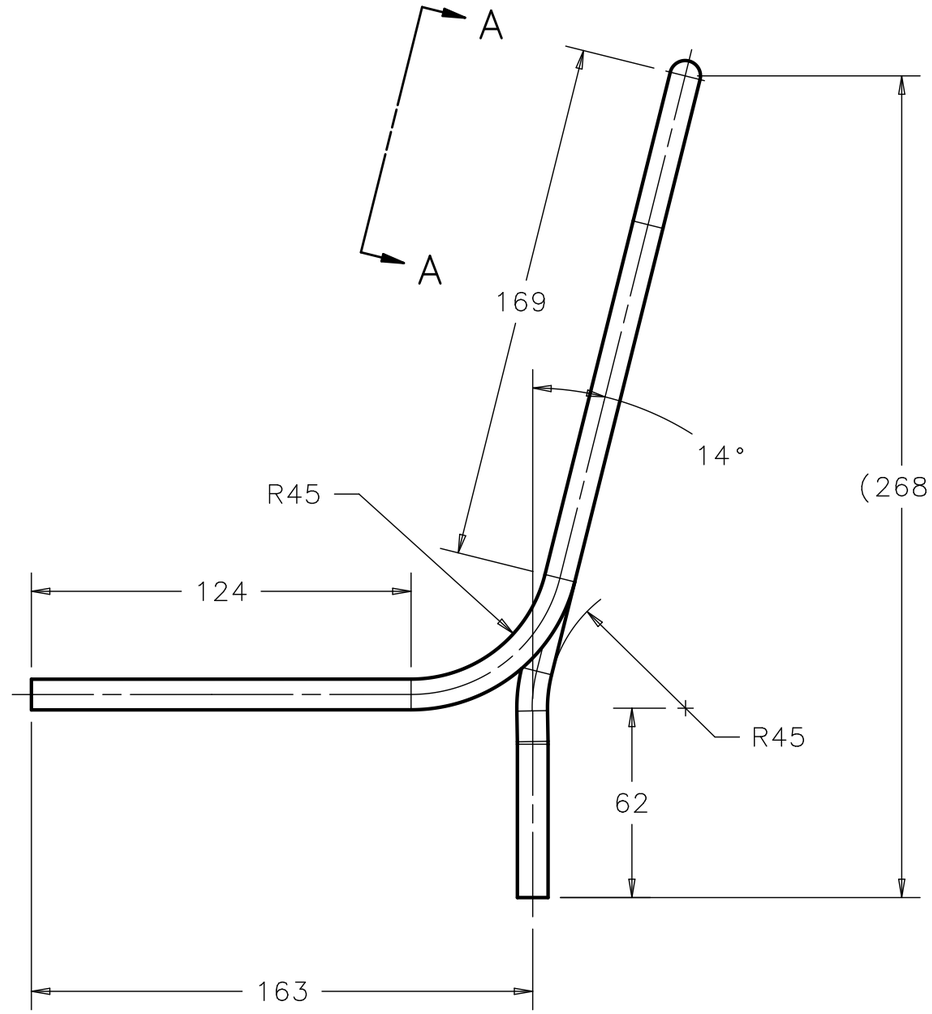

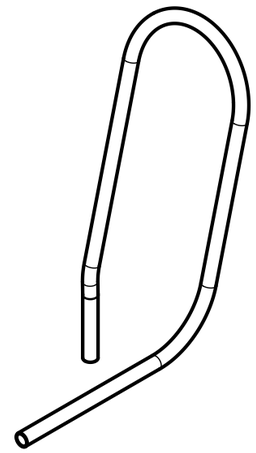

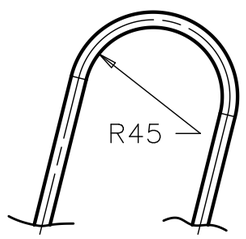

VIEW A–A
SCALE 1:4

ITEM	P.I.N.	DESCRIPTION	QTY

PARTS LIST

-	858235
NEXT ASSY	USED ON
APPLICATION	

FINISH: N/A

MATERIAL: TUBE 10 mm-OD, 1.0 mm WALL THICK, ST.STEEL 316

UNLESS OTHERWISE SPECIFIED:
DIMENSIONS ARE IN MILLIMETERS
INTERPRET DIM PER ASME Y14.5M-1994
BREAK ALL SHARP EDGES .75 MAX.
ALL MACH. SURFACES 3.2 MAX.

TOLERANCES: X ± 1, .X ± -, .XX ± -, ANGLE ± 1°

THIRD ANGLE PROJECTION

DRAWN BY Y.ORLOV	DATE 17OCT08		
CHECKED BY D. ARNOLD	DATE 24FEB09		
ENGINEERED BY Y. ORLOV	DATE 25FEB09		
DATABASE DESY EDMS	TEAM/GROUP T4CM CRYOMODULE		
CAD I-DEAS	SOLID MODEL NO. N/A		

FERMI NATIONAL ACCELERATOR LABORATORY
UNITED STATES DEPARTMENT OF ENERGY
P.O. BOX 500, BATAVIA, IL 60510-0500

TITLE
CM2 CRYOMODULE
CM2 DIPOLE
TUBE_DIPOLE-MAG_CONTROL

SIZE	CAGE CODE	DWG NO.	REV
A3	0U5R6	D00000000858325	A

SCALE 1:2 | DO NOT SCALE DWG | SHEET 1 OF 1

NOTES (UNLESS OTHERWISE SPECIFIED):

1. PART MUST BE FREE OF DIRT, GREASE, OIL AND CHIPS.

REVISION HISTORY

CAD MAINTAINED. CHANGES SHALL BE INCORPORATED BY THE DESIGN ACTIVITY.

ZONE	REV	DESCRIPTION	DATE	APPROVED
	A	INITIAL RELEASE - ER # ILC-000010		

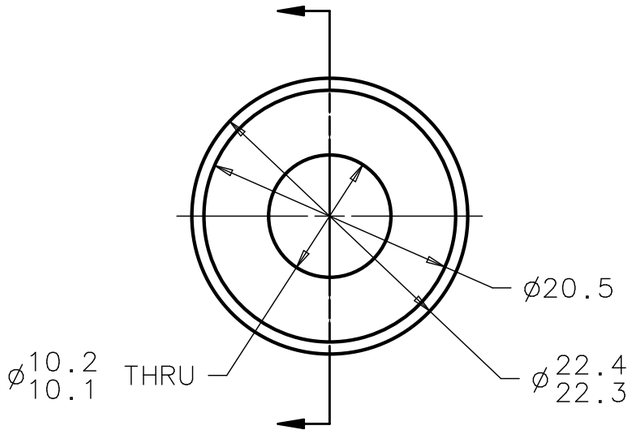

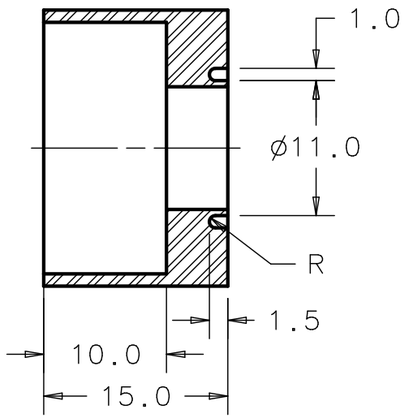

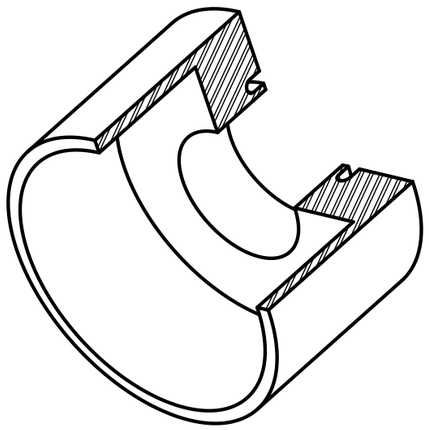

ITEM	P.I.N.	DESCRIPTION	QTY

PARTS LIST

-	858235
NEXT ASSY	USED ON

APPLICATION

FINISH: N/A

MATERIAL: ST.STEEL 316L

UNLESS OTHERWISE SPECIFIED:
DIMENSIONS ARE IN MILLIMETERS
INTERPRET DIM PER ASME Y14.5M-1994
BREAK ALL SHARP EDGES .75 MAX.
ALL MACH. SURFACES 3.2 MAX.

TOLERANCES: X ± - ; .X ± 0.5 ; .XX ± - ; ANGLE ± 1°

THIRD ANGLE PROJECTION

DRAWN BY Y.ORLOV	DATE 17OCT08	
CHECKED BY D. ARNOLD	DATE 24FEB09	
ENGINEERED BY Y. ORLOV	DATE 25FEB09	
DATABASE DESY EDMS	TEAM/GROUP T4CM CRYOMODULE	
CAD I-DEAS	SOLID MODEL NO. N/A	

FERMI NATIONAL ACCELERATOR LABORATORY
UNITED STATES DEPARTMENT OF ENERGY
P.O. BOX 500, BATAVIA, IL 60510-0500

TITLE
CM2 CRYOMODULE
CM2 DIPOLE
COLD_BUSHING_LINE_CONTROL

SIZE	CAGE CODE	DWG NO.	REV
A3	0U5R6	D00000000858315	A

SCALE 2:1 | DO NOT SCALE DWG | SHEET 1 OF 1

Created: 16:51:09 on 27-02-09 (D-M-Y) By: orlov State: 1-4NITIAL

NOTES (UNLESS OTHERWISE SPECIFIED):

1. FABRICATE PER ASME B31.3, NORMAL FLUID SERVICE.
2. THE FOLLOWING DOCUMENTS SHALL BE SUPPLIED WITH DELIVERY OF WELDMENT:
   A. WELD PROCEDURE SPECIFICATION (WPS).
   B. PROCEDURE QUALIFICATION RECORDS (PQR).
   C. WELDER PERFORMANCE QUALIFICATION (WPQ).
   D. EXAMINATION REPORT.
3. LEAK TEST TO BE PERFORMED AT FERMILAB BEFORE ACCEPTANCE.
4. ALL WELDS TO BE VACUUM TIGHT, NO LEAK SHALL BE DETECTABLE ON THE MOST SENSITIVE SCALE OF A HELIUM DETECTOR WITH A MIN SENSITIVITY OF 2 X 10^{-10} ATM. CC/SEC PER FERMILAB SPECIFICATION.
5. ASSEMBLY MUST BE FREE FROM DIRT, GREASE, OIL AND CHIPS.
6. ALL DIMENSION FOR REFERENCE.

REVISION HISTORY
CAD MAINTAINED. CHANGES SHALL BE INCORPORATED BY THE DESIGN ACTIVITY.

ZONE	REV	DESCRIPTION	DATE	APPROVED
	A	INITIAL RELEASE - ER # ILC-000010		

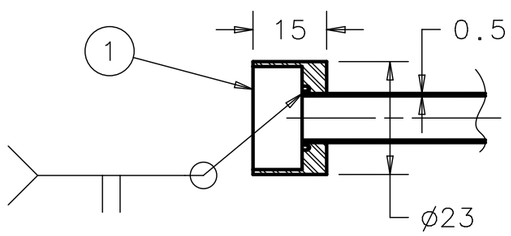

SECTION B-B
SCALE 1:1

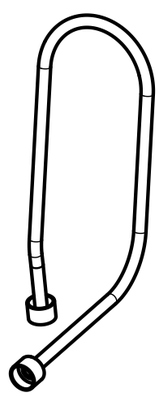

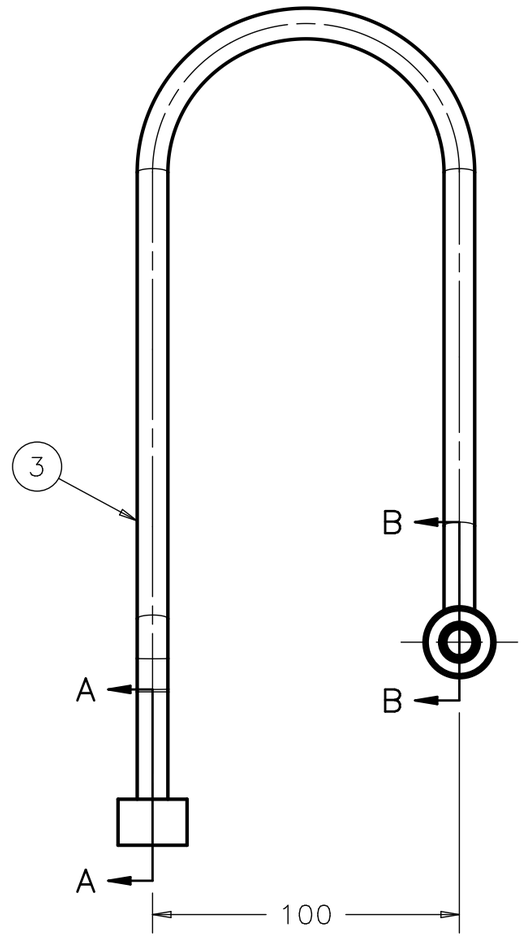

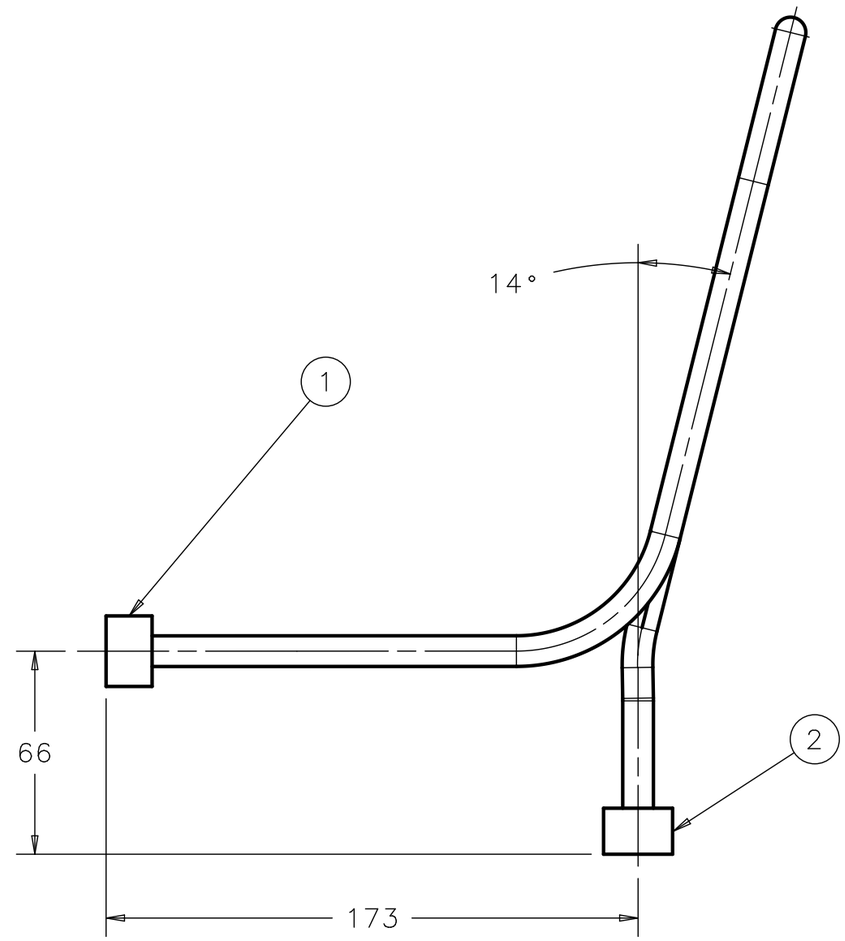

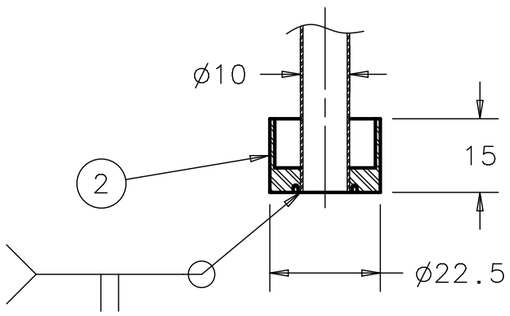

SECTION A-A
SCALE 1:1

ITEM	P.I.N.	DESCRIPTION	QTY
3	858325	TUBE DIPOLE-MAG CONTROL	1
2	858315	COLD BUSHING LINE CONTROL	1
1	858335	WARM BUSHING LINE CONTROL	1

PARTS LIST

	858545
NEXT ASSY	USED ON
APPLICATION	

FINISH: N/A

UNLESS OTHERWISE SPECIFIED:
DIMENSIONS ARE IN MILLIMETERS
INTERPRET DIM PER ASME Y14.5M-1994
BREAK ALL SHARP EDGES .75 MAX.
ALL MACH. SURFACES 3.2 MAX.

MATERIAL: SEE PARTS LIST

TOLERANCES: X ± - ; .X ± - ; .XX ± - ; ANGLE ± -

THIRD ANGLE PROJECTION

DRAWN BY Y.ORLOV	DATE 16OCT08	
CHECKED BY D. ARNOLD	DATE 24FEB09	
ENGINEERED BY Y. ORLOV	DATE 25FEB09	
DATABASE DESY EDMS	TEAM/GROUP T4CM CRYOMODULE	
CAD I-DEAS	SOLID MODEL NO. N/A	

FERMI NATIONAL ACCELERATOR LABORATORY
UNITED STATES DEPARTMENT OF ENERGY
P.O. BOX 500, BATAVIA, IL 60510-0500

TITLE
CM2 CRYOMODULE
CM2 DIPOLE
LINE_DIPOLE-MAG_CONTROL

SIZE	CAGE CODE	DWG NO.	REV
A3	0U5R6	D00000000858235	A

SCALE 1:2 | DO NOT SCALE DWG | SHEET 1 OF 1

REVISION HISTORY CAD MAINTAINED. CHANGES SHALL BE INCORPORATED BY THE DESIGN ACTIVITY.				
ZONE	REV	DESCRIPTION	DATE	APPROVED
	A	INITIAL RELEASE - ER # ILC-000010		

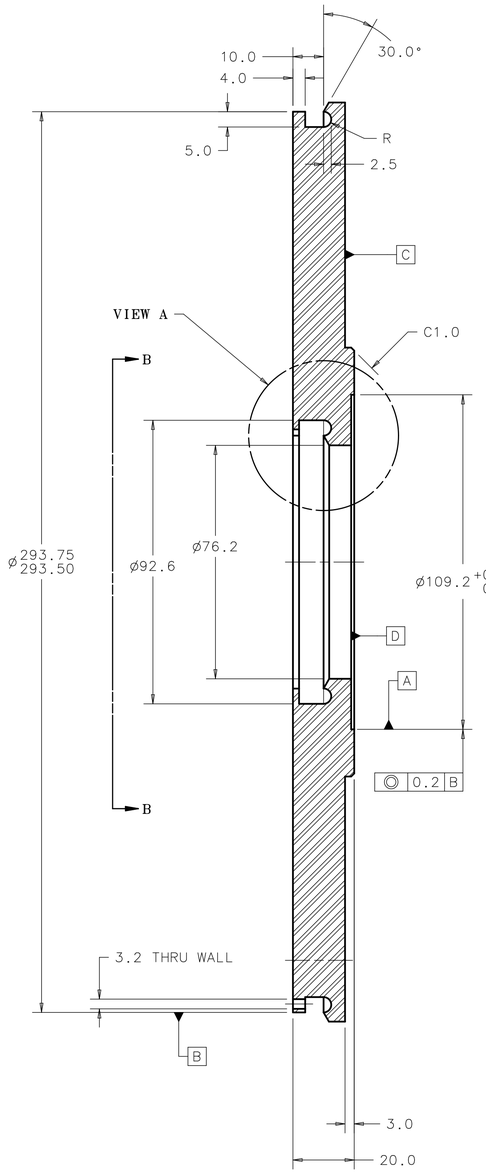

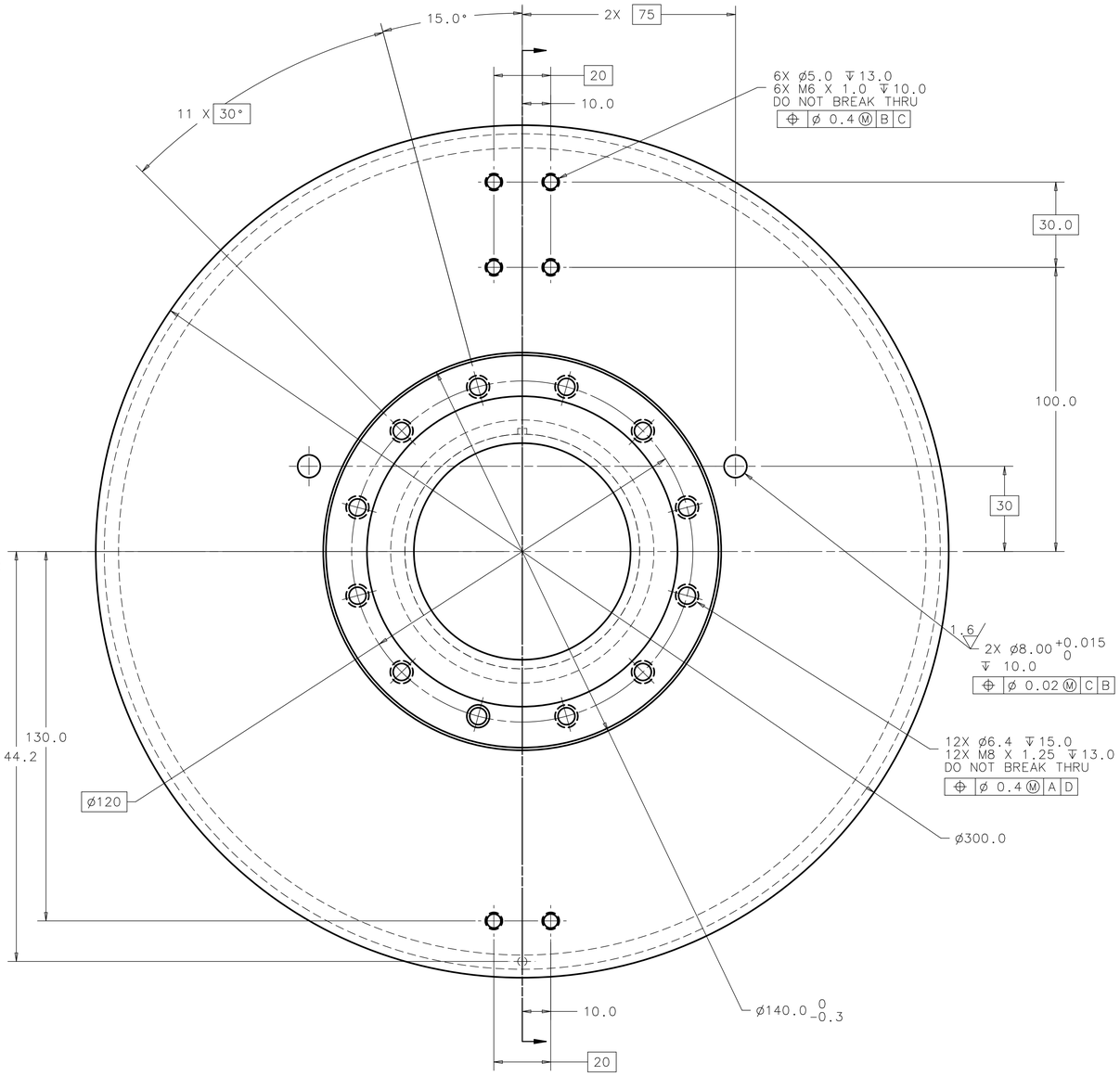

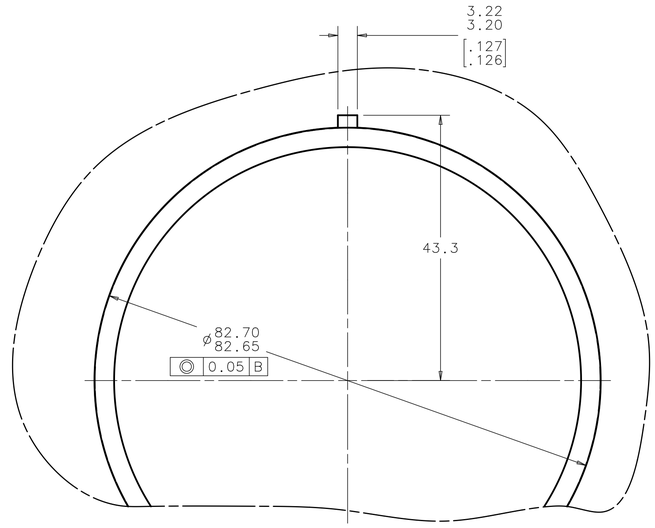

VIEW A-A
SCALE 2:1

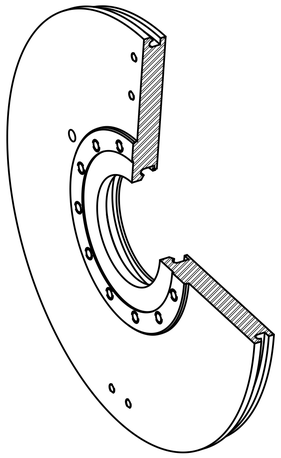

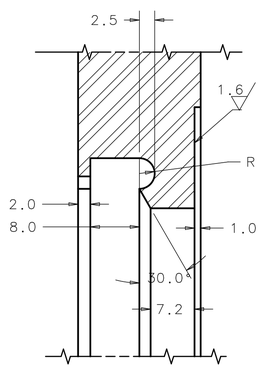

VIEW A
SCALE 2:1

NOTES (UNLESS OTHERWISE SPECIFIED):

1. DIMENSION WITH [ ] ARE IN MM.
2. ITEM MUST BE FREE OF DIRT, GREASE, OIL AND CHIPS.

ITEM	P.I.N.	DESCRIPTION	QTY

PARTS LIST

NEXT ASSY	861615
APPLICATION	USED ON

FINISH: N/A

MATERIAL: ST.STEEL 316L

UNLESS OTHERWISE SPECIFIED:
DIMENSIONS ARE IN MILLIMETERS
INTERPRET DIM PER ASME Y14.5M-1994
BREAK ALL SHARP EDGES .75 MAX.
ALL MACH. SURFACES 3.2 MAX.

TOLERANCES: X ± - ; .X ± 0.5 ; .XX ± - ; ANGLE ± 1°

THIRD ANGLE PROJECTION

DRAWN BY Y. ORLOV	DATE 01OCT08	
CHECKED BY D. ARNOLD	DATE 24FEB09	
ENGINEERED BY Y. ORLOV	DATE 25FEB09	
DATABASE DESY EDMS	TEAM/GROUP T4CM CRYOMODULE	
CAD I-DEAS	SOLID MODEL NO. D00000001030202	

FERMI NATIONAL ACCELERATOR LABORATORY
UNITED STATES DEPARTMENT OF ENERGY
P.O. BOX 500, BATAVIA, IL 60510-0500

TITLE
CM2 CRYIMODULE
CM2 DIPOLE
FLANGE_XFEL_VESSEL_US

SIZE	CAGE CODE	DWG NO.	REV
A1	0U5R6	D00000000858225	A

SCALE 1:1 | DO NOT SCALE DRAWING | SHEET 1 OF 1

Created: 15:09:10 on 27-02-09 (D-M-Y) By: orlov State: 1-INITIAL

REVISION HISTORY CAD MAINTAINED. CHANGES SHALL BE INCORPORATED BY THE DESIGN ACTIVITY.				
ZONE	REV	DESCRIPTION	DATE	APPROVED
	A	INITIAL RELEASE - ER # ILC-000010		

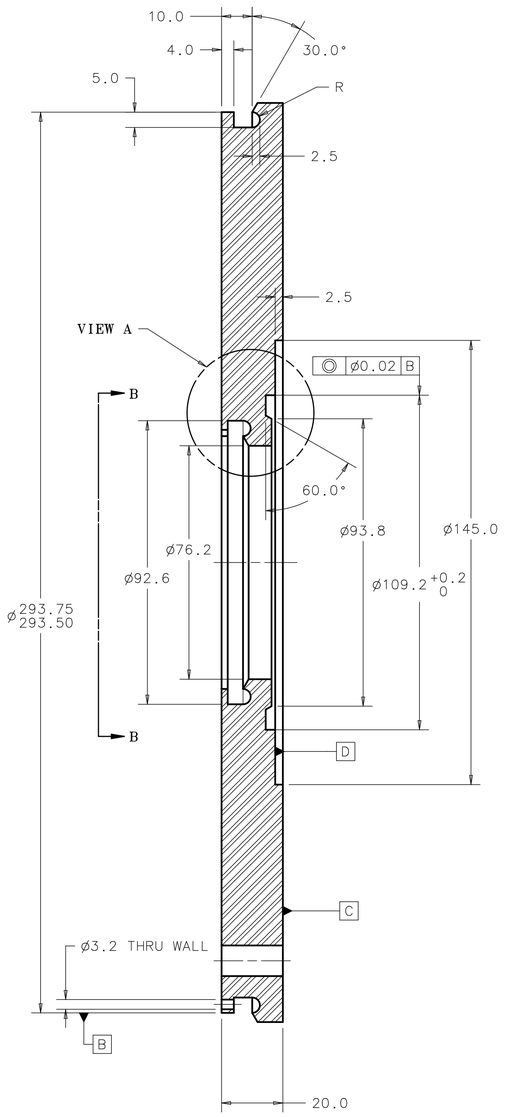

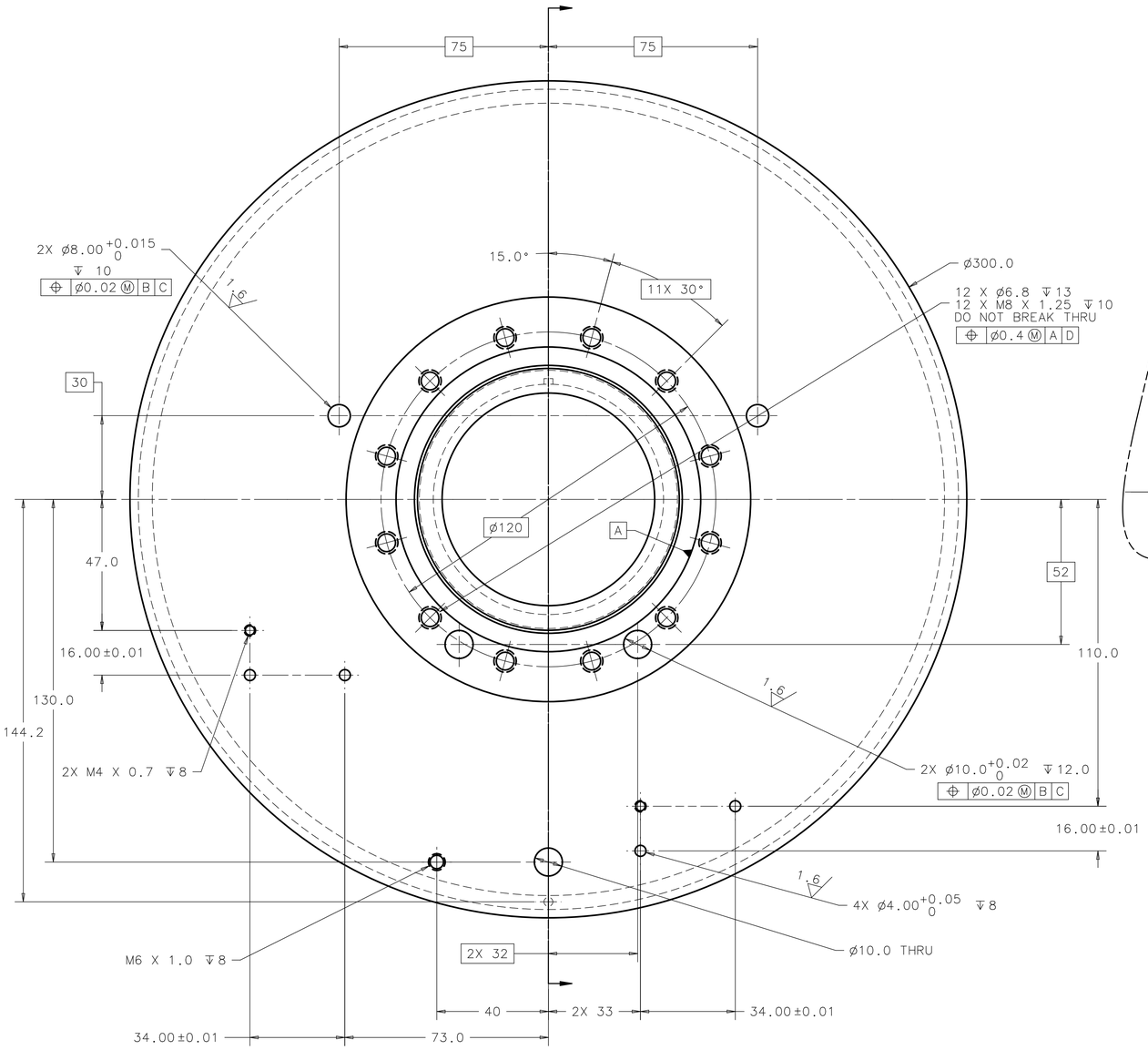

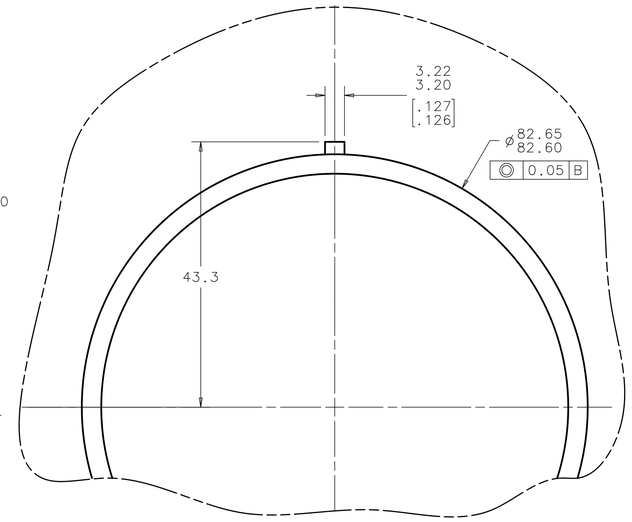

VIEW B–B
SCALE 2:1

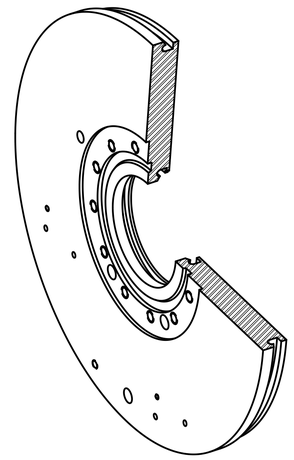

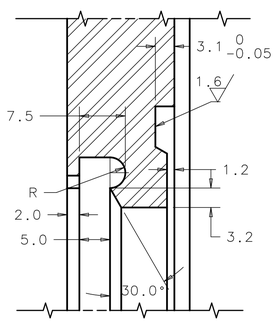

VIEW A
SCALE 2:1

NOTES (UNLESS OTHERWISE SPECIFIED):

1. DIMENSION IN [ ] ARE IN INCHES.
2. ITEM MUST BE FREE OF DIRT, GREASE, OIL AND CHIPS.

ITEM	P.I.N.	DESCRIPTION	QTY

PARTS LIST

NEXT ASSY	851475
	USED ON
APPLICATION	

FINISH: N/A

MATERIAL: ST. STEEL 316L

UNLESS OTHERWISE SPECIFIED:
DIMENSIONS ARE IN MILLIMETERS
INTERPRET DIM PER ASME Y14.5M-1994
BREAK ALL SHARP EDGES .75 MAX.
ALL MACH. SURFACES 3.2 MAX.

TOLERANCES: X ± 1, .X ± 0.5, .XX ± -, ANGLE ± 1°

THIRD ANGLE PROJECTION

DRAWN BY Y. ORLOV	DATE 30SEP08		
CHECKED BY D. ARNOLD	DATE 24FEB09		
ENGINEERED BY Y. ORLOV	DATE 25FEB09		
DATABASE DESY EDMS	TEAM/GROUP T4CM CRYOMODULE		
CAD I-DEAS	SOLID MODEL NO. D00000001030192		

FERMI NATIONAL ACCELERATOR LABORATORY
UNITED STATES DEPARTMENT OF ENERGY
P.O. BOX 500, BATAVIA, IL 60510-0500

TITLE
CM2 CRYOMODULE
CM2 DIPOLE
FLANGE_XFEL_VESSEL_DS

SIZE	CAGE CODE	DWG NO.	REV
A1	0U5R6	D00000000858215	A

SCALE 1:1 | DO NOT SCALE DRAWING | SHEET 1 OF 1

Created: 15:06:25 on 27-02-09 (D-M-Y) By: orlov State: 1-INITIAL

REVISION HISTORY CAD MAINTAINED. CHANGES SHALL BE INCORPORATED BY THE DESIGN ACTIVITY.				
ZONE	REV	DESCRIPTION	DATE	APPROVED
	A	INITIAL RELEASE - ER # ILC-000010		

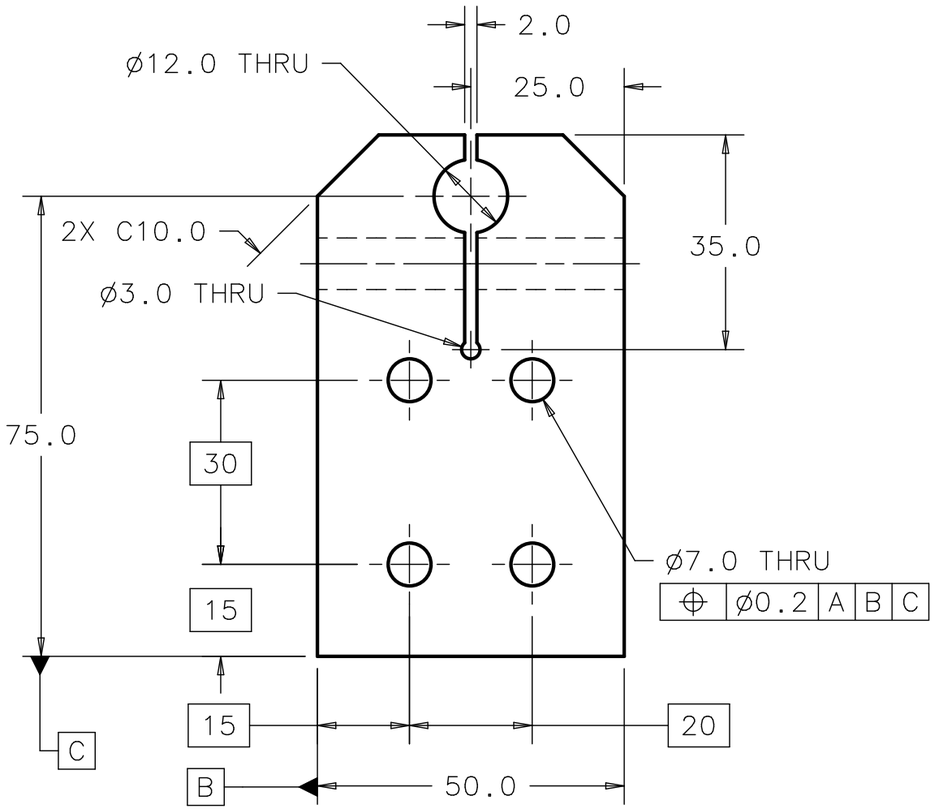

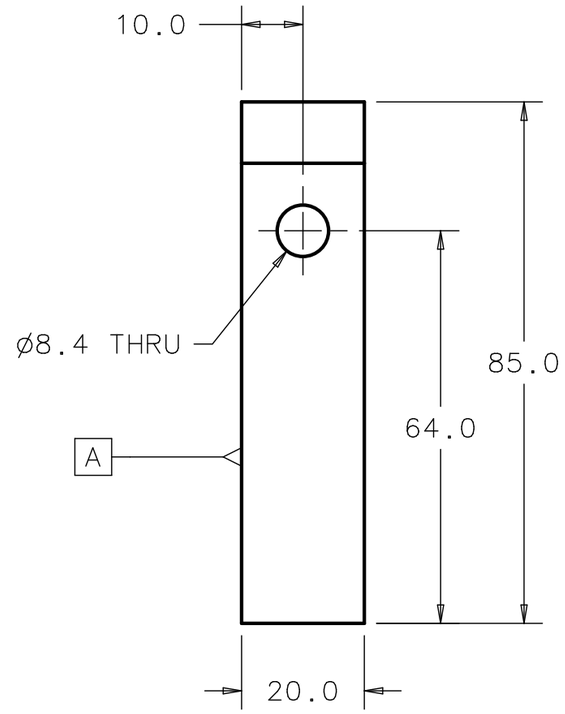

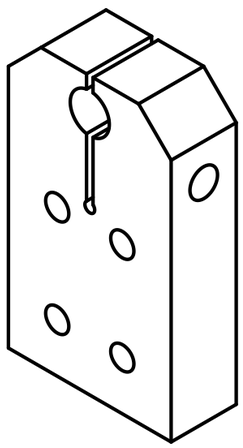

NOTES (UNLESS OTHERWISE SPECIFIED):

1. PART MUST BE FREE OF DIRT, GREASE, OIL AND CHIPS.

ITEM	P.I.N.	DESCRIPTION	QTY

PARTS LIST

	858545
NEXT ASSY	USED ON
APPLICATION	

FINISH N/A	UNLESS OTHERWISE SPECIFIED: DIMENSIONS ARE IN MILLIMETERS INTERPRET DIM PER ASME Y14.5M-1994 BREAK ALL SHARP EDGES .75 MAX. ALL MACH. SURFACES 3.2 MAX.	DRAWN BY Y.ORLOV	DATE 03OCT08
		CHECKED BY D. ARNOLD	DATE 24FEB09
		ENGINEERED BY Y. ORLOV	DATE 25FEB09
MATERIAL ST. STEEL 316L	TOLERANCES X ± - .X ± 0.5 .XX ± - ANGLE ± 1°	THIRD ANGLE PROJECTION	
		DATABASE DESY EDMS	TEAM/GROUP T4CM CRYOMODULE
		CAD I-DEAS	SOLID MODEL NO. N/A

FERMI NATIONAL ACCELERATOR LABORATORY
UNITED STATES DEPARTMENT OF ENERGY
P.O. BOX 500, BATAVIA, IL 60510-0500

TITLE
CM2 CRYOMODULE
CM2 DIPOLE
PLATE-INVAR_ROD_HOLDER

SIZE	CAGE CODE	DWG NO.	REV
A3	0U5R6	D00000000857435	A
SCALE 1:1	DO NOT SCALE DWG	SHEET 1 OF 1	

REVISION HISTORY CAD MAINTAINED. CHANGES SHALL BE INCORPORATED BY THE DESIGN ACTIVITY.				
ZONE	REV	DESCRIPTION	DATE	APPROVED
	A	INITIAL RELEASE		

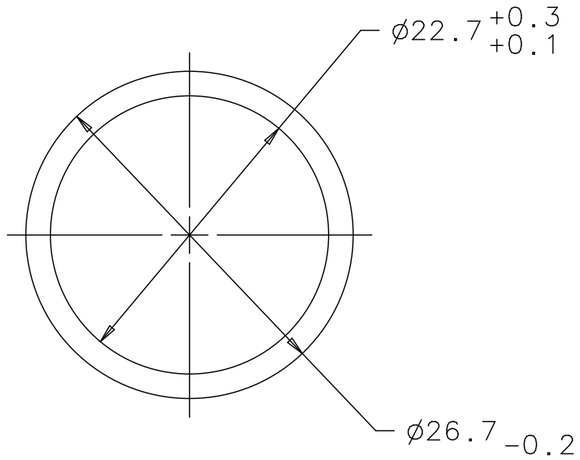

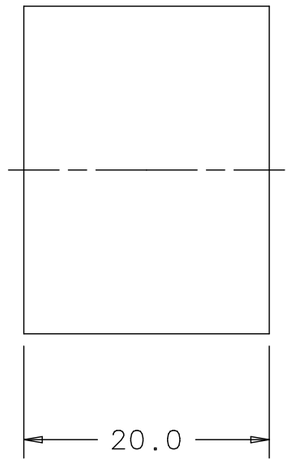

ITEM	P.I.N.	DESCRIPTION	QTY

PARTS LIST

-	857375
NEXT ASSY	USED ON
APPLICATION	

FINISH: N/A

MATERIAL: ST. STEEL 316L

UNLESS OTHERWISE SPECIFIED:
DIMENSIONS ARE IN MILLIMETERS
INTERPRET DIM PER ASME Y14.5M-1994
BREAK ALL SHARP EDGES .75 MAX.
ALL MACH. SURFACES 3.2 MAX.

TOLERANCES: X ± - ; .X ± 0.5 ; .XX ± - ; ANGLE ± -

THIRD ANGLE PROJECTION

DRAWN BY Y.ORLOV	DATE 03OCT08	
CHECKED BY	DATE	
ENGINEERED BY	DATE	
DATABASE DESY EDMS	TEAM/GROUP T4CM CRYOMODULE	
CAD I-DEAS	SOLID MODEL NO. N/A	

FERMI NATIONAL ACCELERATOR LABORATORY
UNITED STATES DEPARTMENT OF ENERGY
P.O. BOX 500, BATAVIA, IL 60510-0500

TITLE
CM2 CRYOMODULE
CM2 DIPOLE
PORT_INSTR_OUT

SIZE	CAGE CODE	DWG NO.	REV
A3	0U5R6	D00000000857425	A

SCALE 2:1 | DO NOT SCALE DWG | SHEET 1 OF 1

REVISION HISTORY CAD MAINTAINED. CHANGES SHALL BE INCORPORATED BY THE DESIGN ACTIVITY.				
ZONE	REV	DESCRIPTION	DATE	APPROVED
	A	INITIAL RELEASE		

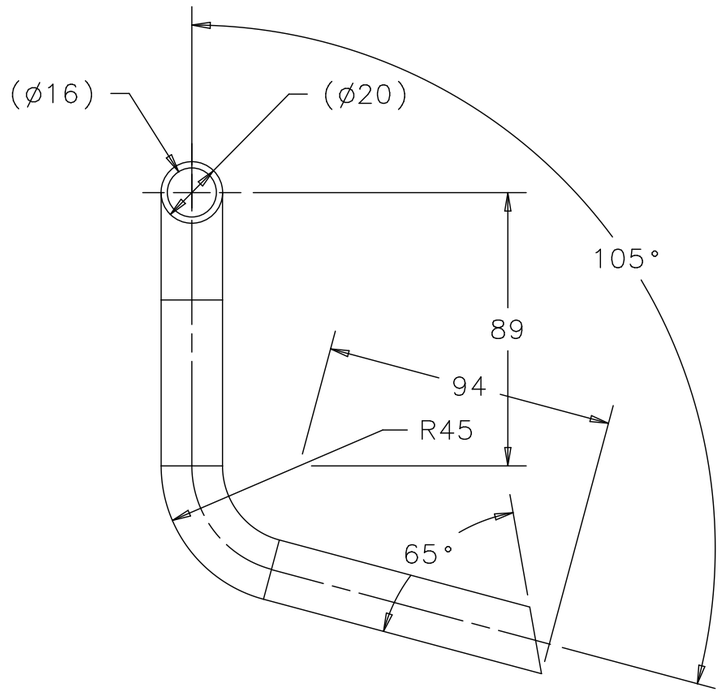

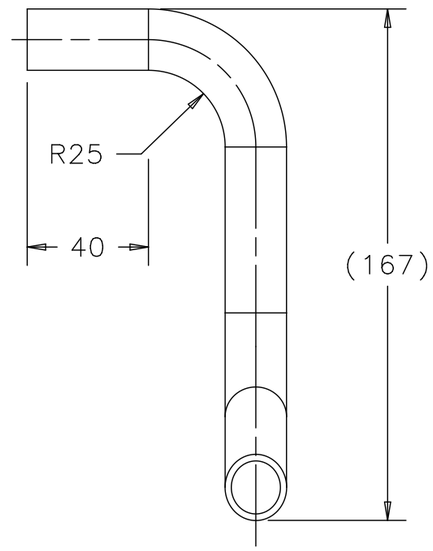

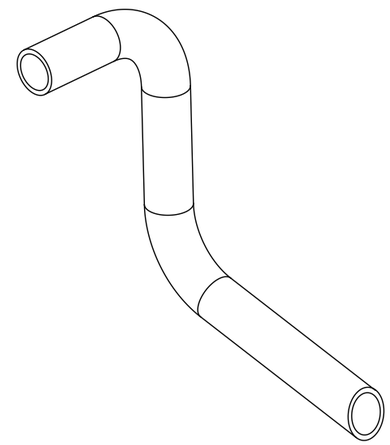

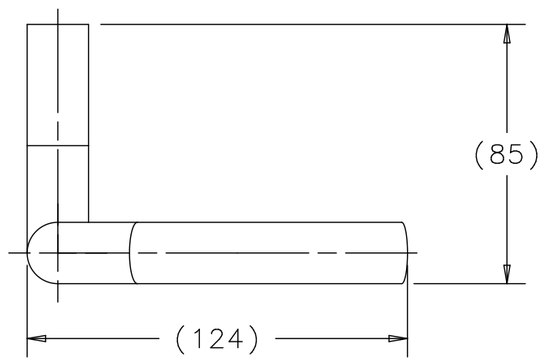

ITEM	P.I.N.	DESCRIPTION	QTY

PARTS LIST

-	857375
NEXT ASSY	USED ON

APPLICATION

FINISH: N/A

UNLESS OTHERWISE SPECIFIED:
DIMENSIONS ARE IN MILLIMETERS
INTERPRET DIM PER ASME Y14.5M-1994
BREAK ALL SHARP EDGES .75 MAX.
ALL MACH. SURFACES 3.2 MAX.

MATERIAL: TUBE 20MM O.D. 2MM WALL THICK ST.STEEL 316L

TOLERANCES: X ± 1, .X ± -, .XX ± -, ANGLE ± 1°

THIRD ANGLE PROJECTION

DRAWN BY: Y.ORLOV	DATE: 03OCT08	
CHECKED BY	DATE	
ENGINEERED BY	DATE	
DATABASE: DESY EDMS	TEAM/GROUP: T4CM CRYOMODULE	
CAD: I-DEAS	SOLID MODEL NO.: N/A	

FERMI NATIONAL ACCELERATOR LABORATORY
UNITED STATES DEPARTMENT OF ENERGY
P.O. BOX 500, BATAVIA, IL 60510-0500

TITLE: CM2 CRYOMODULE
CM2 DIPOLE
PIPE_INSTR_DIPOLE_OUT

SIZE	CAGE CODE	DWG NO.	REV
A3	0U5R6	D00000000857415	A

SCALE 1:2 | DO NOT SCALE DWG | SHEET 1 OF 1

REVISION HISTORY CAD MAINTAINED. CHANGES SHALL BE INCORPORATED BY THE DESIGN ACTIVITY.				
ZONE	REV	DESCRIPTION	DATE	APPROVED
	A	INITIAL RELEASE		

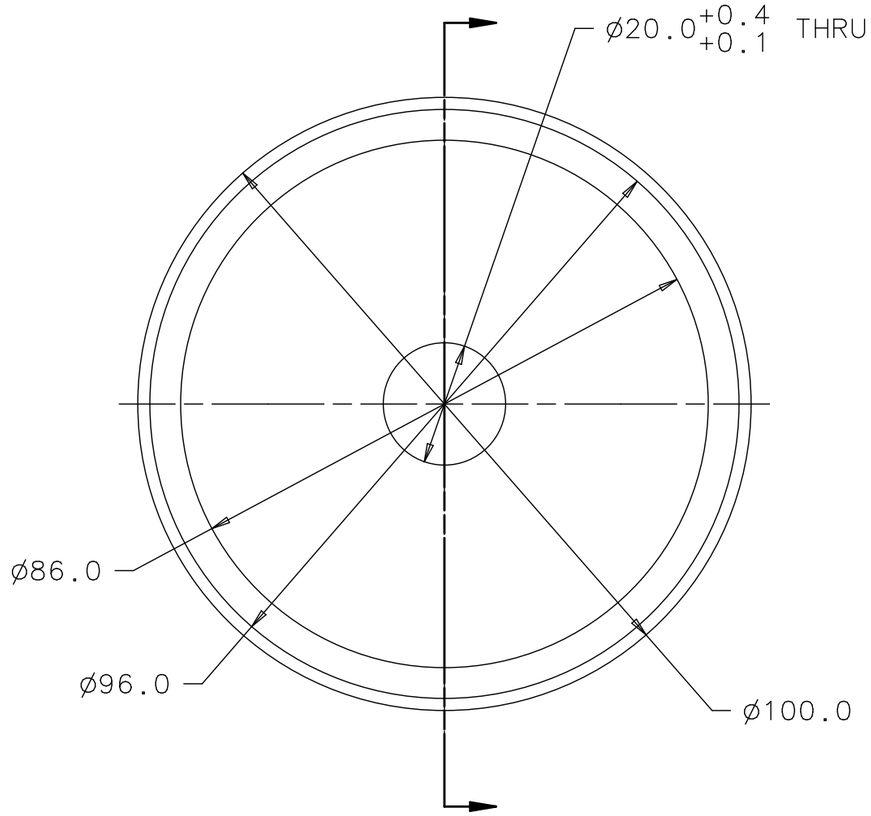

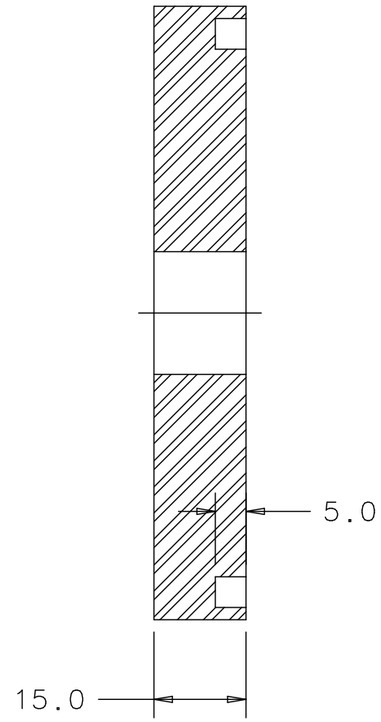

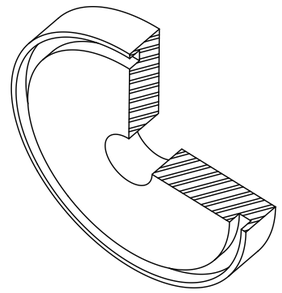

ITEM	P.I.N.	DESCRIPTION	QTY

PARTS LIST

-	857335
NEXT ASSY	USED ON
APPLICATION	

FINISH: N/A

MATERIAL: ST. STEEL 316L

UNLESS OTHERWISE SPECIFIED:
DIMENSIONS ARE IN MILLIMETERS
INTERPRET DIM PER ASME Y14.5M-1994
BREAK ALL SHARP EDGES .75 MAX.
ALL MACH. SURFACES 3.2 MAX.

TOLERANCES: X ± - ; .X ± 0.5 ; .XX ± - ; ANGLE ± 1°

THIRD ANGLE PROJECTION

DRAWN BY Y.ORLOV	DATE 03OCT08	
CHECKED BY	DATE	
ENGINEERED BY	DATE	
DATABASE DESY EDMS	TEAM/GROUP T4CM CRYOMODULE	
CAD I-DEAS	SOLID MODEL NO. N/A	

FERMI NATIONAL ACCELERATOR LABORATORY
UNITED STATES DEPARTMENT OF ENERGY
P.O. BOX 500, BATAVIA, IL 60510-0500

TITLE
CM2 CRYOMODULE
CM2 DIPOLE
FLANGE_INSTR_LEADS_CONNECT

SIZE	CAGE CODE	DWG NO.	REV
A3	0U5R6	D00000000857405	A

SCALE 1:1 | DO NOT SCALE DWG | SHEET 1 OF 1

REVISION HISTORY CAD MAINTAINED. CHANGES SHALL BE INCORPORATED BY THE DESIGN ACTIVITY.				
ZONE	REV	DESCRIPTION	DATE	APPROVED
	A	INITIAL RELEASE		

NOTES (UNLESS OTHERWISE SPECIFIED):

1. DIMENSION WITH [ ] ARE IN INCHES.
2. PART TO BE DEBURRED.

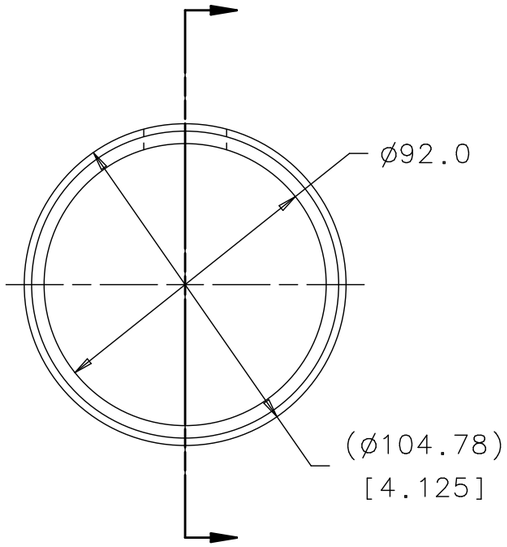

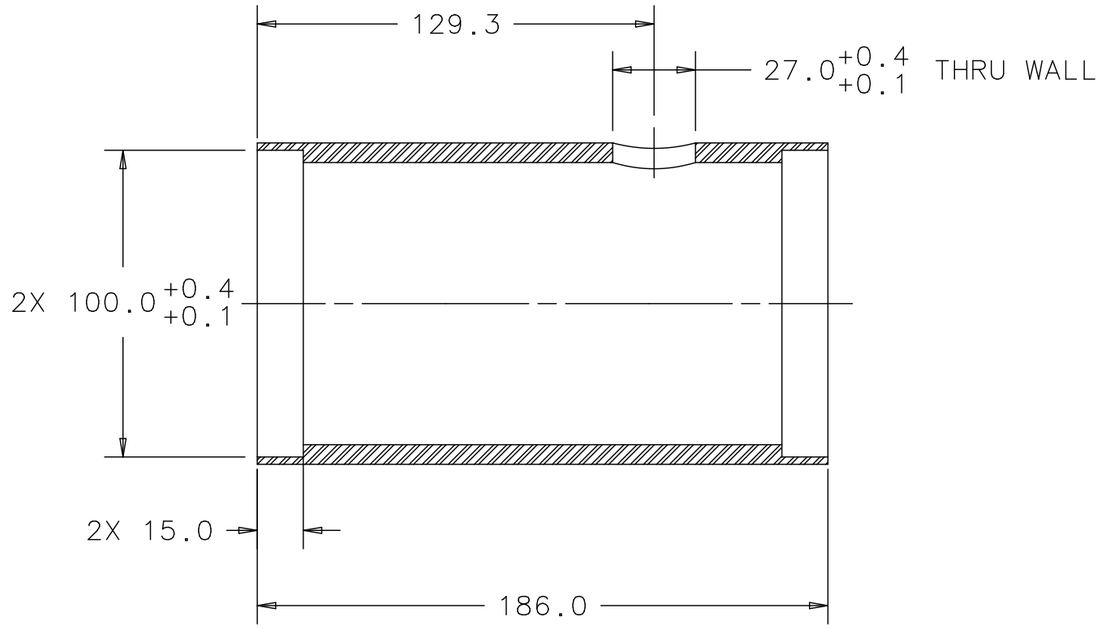

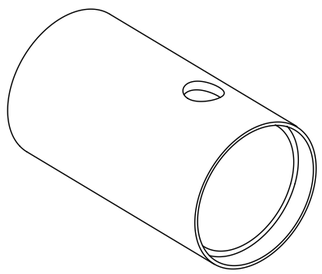

ITEM	P.I.N.	DESCRIPTION	QTY
PARTS LIST			

-	857375
NEXT ASSY	USED ON
APPLICATION	

FINISH: N/A

UNLESS OTHERWISE SPECIFIED:
DIMENSIONS ARE IN MILLIMETERS
INTERPRET DIM PER ASME Y14.5M-1994
BREAK ALL SHARP EDGES .75 MAX.
ALL MACH. SURFACES 3.2 MAX.

MATERIAL: PIPE [4 1/4] O.D. [.375] WALL THK, ST. STEEL 316L

TOLERANCES: X ± - ; .X ± 0.5 ; .XX ± - ; ANGLE ± 1°

THIRD ANGLE PROJECTION

DRAWN BY: Y.ORLOV	DATE: 03OCT08	
CHECKED BY	DATE	
ENGINEERED BY	DATE	
DATABASE: DESY EDMS	TEAM/GROUP: T4CM CRYOMODULE	
CAD: I-DEAS	SOLID MODEL NO.: N/A	

FERMI NATIONAL ACCELERATOR LABORATORY
UNITED STATES DEPARTMENT OF ENERGY
P.O. BOX 500, BATAVIA, IL 60510-0500

TITLE
CM2 CRYOMODULE
CM2 DIPOLE
BOX_DIPOLE_INSTR_LEADS_CONNECT

SIZE	CAGE CODE	DWG NO.	REV
A3	0U5R6	D00000000857395	A
SCALE 1:2	DO NOT SCALE DWG	SHEET 1 OF 1	

REVISION HISTORY CAD MAINTAINED. CHANGES SHALL BE INCORPORATED BY THE DESIGN ACTIVITY.				
ZONE	REV	DESCRIPTION	DATE	APPROVED
	A	INITIAL RELEASE		

NOTES (UNLESS OTHERWISE SPECIFIED):

1. FABRICATE PER ASME B31.3, NORMAL FLUID SERVICE.
2. THE FOLLOWING DOCUMENTS SHALL BE SUPPLIED WITH DELIVERY OF WELDMENT:

   A. WELD PROCEDURE SPECIFICATION (WPS).
   B. PROCEDURE QUALIFICATION RECORDS (PQR).
   C. WELDER PERFORMANCE QUALIFICATION (WPQ).
   D. EXAMINATION REPORT.

3. LEAK TEST TO BE PERFORMED AT FERMILAB BEFORE ACCEPTANCE.
4. ALL WELDS TO BE CACUUM TIGHT, NO LEAK SHALL BE DETECTABLE ON THE MOST SENSITIVE SCALE OF A HELIUM DETECTOR WITH A MIN SENSITIVE OF 2 X 10^{-10} ATM, CC/SEC PER FERMILAB SPECIFICACION # 1620-ES-187240.
5. INTERIOR WELDS TO BE AS SMOOTH AS POSSIBLE, FINISH GRIND SMOOTH MAY BE REQUIRED TO OBTAIN A SMOOTH TRANSITION.
6. ASSEMBLY MUST BE FREE FROM DIRT, GREASE, OIL AND CHIPS.

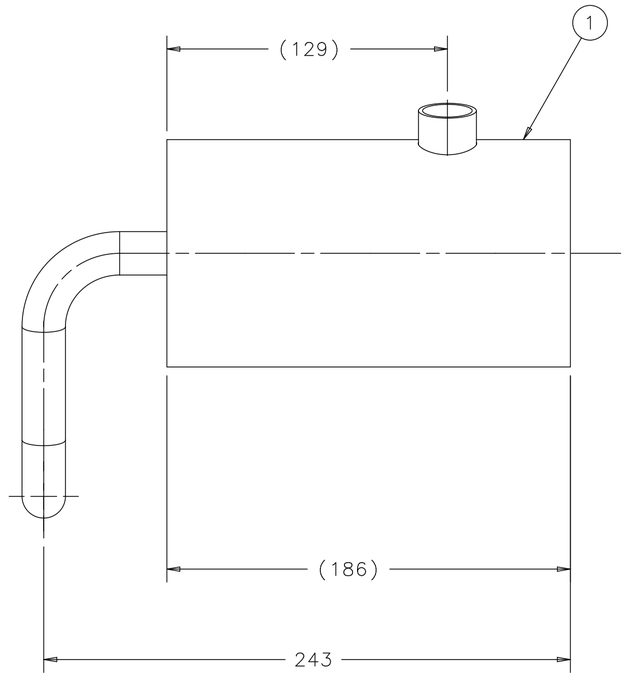

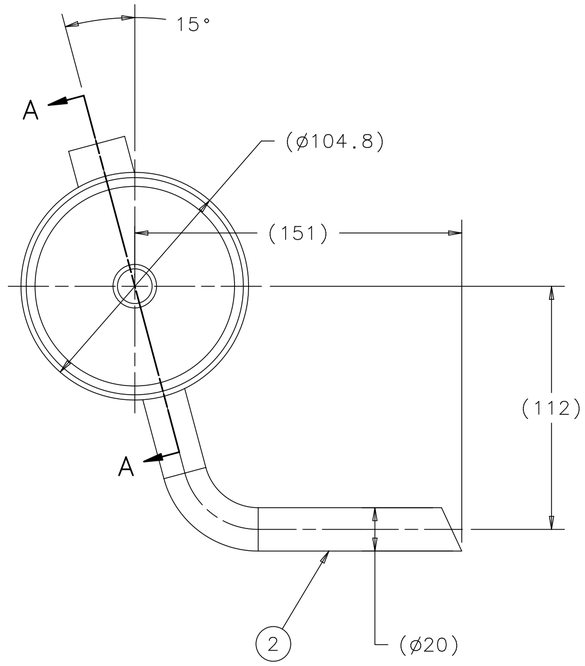

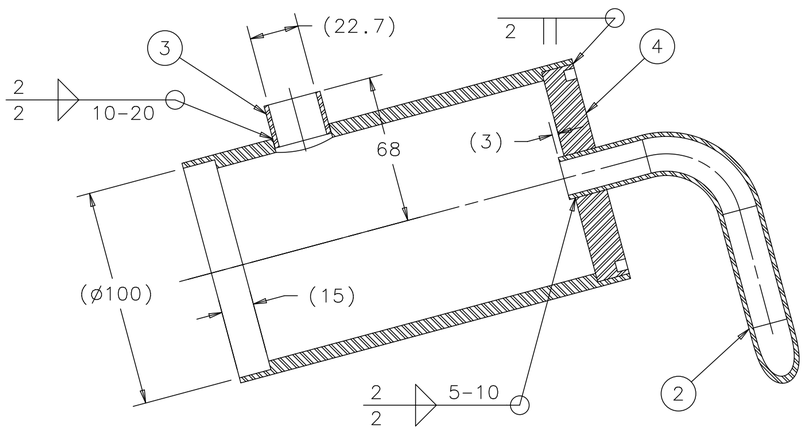

SECTION A-A

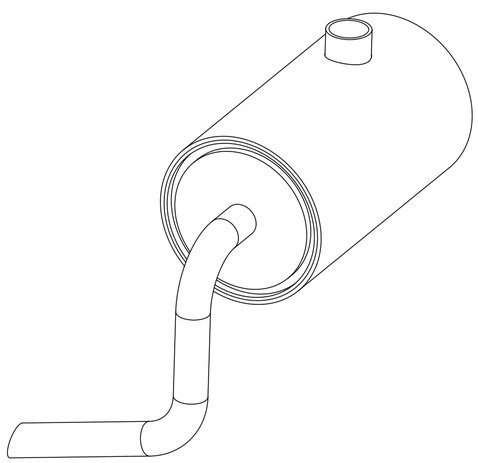

ITEM	P.I.N.	DESCRIPTION	QTY
4	857405	FLANGE INSTR LEADS CONNECT	1
3	857425	PORT INSTR OUT	1
2	857415	PIPE INSTR DIPOLE OUT	1
1	857395	BOX DIPOLE INSTR LEADS CONNECT	1

PARTS LIST

857385	857335
NEXT ASSY	USED ON
APPLICATION	

FINISH: N/A

MATERIAL: SEE PARTS LIST

UNLESS OTHERWISE SPECIFIED:
DIMENSIONS ARE IN MILLIMETERS
INTERPRET DIM PER ASME Y14.5M-1994
BREAK ALL SHARP EDGES .75 MAX.
ALL MACH. SURFACES 3.2 / MAX.

TOLERANCES: X ± 1, .X ± -, .XX ± -, ANGLE ± 1°

THIRD ANGLE PROJECTION

DRAWN BY: Y. ORLOV	DATE: 02OCT08	
CHECKED BY	DATE	
ENGINEERED BY	DATE	
DATABASE: DESY EDMS	TEAM/GROUP: T4CM CRYOMODULE	
CAD: I-DEAS	SOLID MODEL NO.: N/A	

FERMI NATIONAL ACCELERATOR LABORATORY
UNITED STATES DEPARTMENT OF ENERGY
P.O. BOX 500, BATAVIA, IL 60510-0500

TITLE
CM2 CRYOMODULE
CM2 DIPOLE
BOX_INSTR_LEADS_CONNECT_WLDMT

SIZE	CAGE CODE	DWG NO.	REV
A2	0U5R6	D00000000857375	A

SCALE 1:2 | DO NOT SCALE DWG | SHEET 1 OF 1

REVISION HISTORY CAD MAINTAINED. CHANGES SHALL BE INCORPORATED BY THE DESIGN ACTIVITY.				
ZONE	REV	DESCRIPTION	DATE	APPROVED
	A	INITIAL RELEASE		

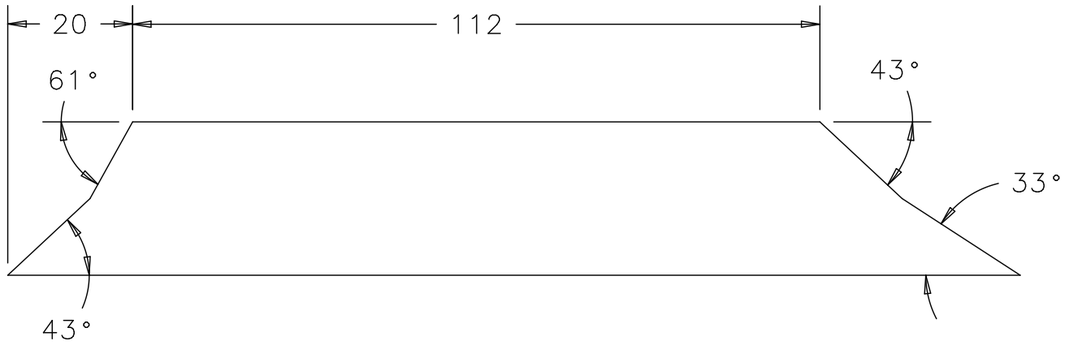

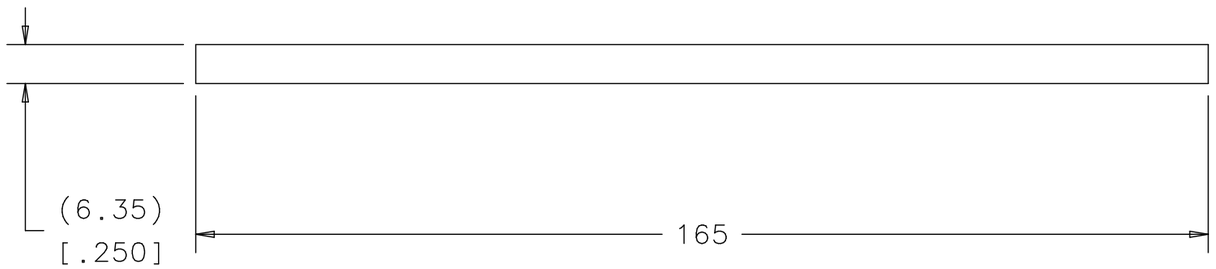

NOTES (UNLESS OTHERWISE SPECIFIED):

1. DIMENSION WITH [ ] ARE IN INCHES.
2. PART TO BE DEBURRED.

ITEM	P.I.N.	DESCRIPTION	QTY

PARTS LIST

858535	857335
NEXT ASSY	USED ON
APPLICATION	

FINISH: N/A

MATERIAL: PLATE 6.35 [1/4']-THK ST. STEEL 316L

UNLESS OTHERWISE SPECIFIED:
DIMENSIONS ARE IN MILLIMETERS
INTERPRET DIM PER ASME Y14.5M-1994
BREAK ALL SHARP EDGES .75 MAX.
ALL MACH. SURFACES 3.2 MAX.

TOLERANCES: X ± 1, .X ± -, .XX ± -, ANGLE ± 1°

THIRD ANGLE PROJECTION

DRAWN BY	DATE
Y. ORLOV	02OCT08
CHECKED BY	DATE
ENGINEERED BY	DATE
DATABASE: DESY EDMS	TEAM/GROUP: T4CM CRYOMODULE
CAD: I-DEAS	SOLID MODEL NO.: N/A

FERMI NATIONAL ACCELERATOR LABORATORY
UNITED STATES DEPARTMENT OF ENERGY
P.O. BOX 500, BATAVIA, IL 60510-0500

TITLE: CM2 CRYOMODULE
CM2 DIPOLE
SUPPORT_BAR_UPPER

SIZE	CAGE CODE	DWG NO.	REV
A3	0U5R6	D00000000857365	A
SCALE 1:1	DO NOT SCALE DWG	SHEET 1 OF 1	

REVISION HISTORY

CAD MAINTAINED. CHANGES SHALL BE INCORPORATED BY THE DESIGN ACTIVITY.

ZONE	REV	DESCRIPTION	DATE	APPROVED
	A	INITIAL RELEASE		

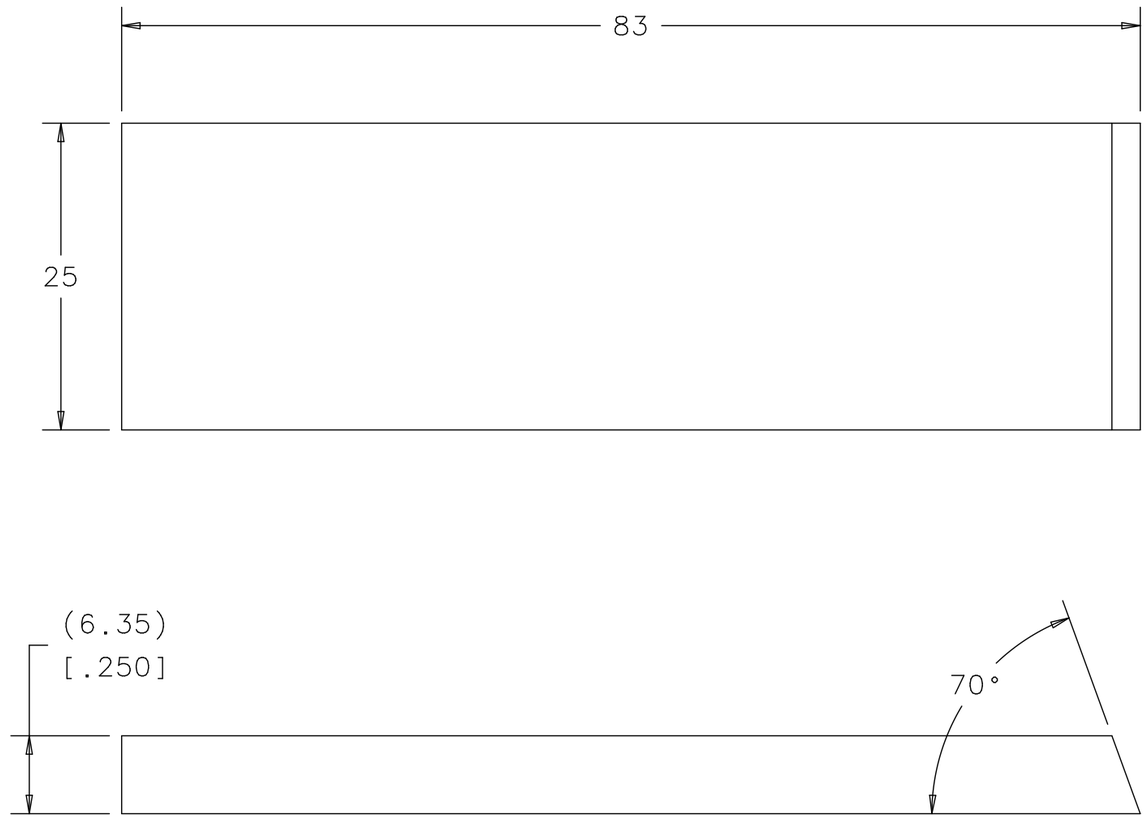

NOTES (UNLESS OTHERWISE SPECIFIED):

1. DIMENSION WITH [ ] ARE IN INCHES.
2. PART TO BE DEBURRED.

ITEM	P.I.N.	DESCRIPTION	QTY

PARTS LIST

858535	857335
NEXT ASSY	USED ON
APPLICATION	

FINISH: N/A

MATERIAL: PLATE 6.35 [1/4]-THK ST. STEEL 316L

UNLESS OTHERWISE SPECIFIED:
DIMENSIONS ARE IN MILLIMETERS
INTERPRET DIM PER ASME Y14.5M-1994
BREAK ALL SHARP EDGES .75 MAX.
ALL MACH. SURFACES 3.2 MAX.

TOLERANCES: X ± 1, .X ± -, .XX ± -, ANGLE ± 1°

THIRD ANGLE PROJECTION

DRAWN BY: Y. ORLOV	DATE: 02OCT08	
CHECKED BY	DATE	
ENGINEERED BY	DATE	
DATABASE: DESY EDMS	TEAM/GROUP: T4CM CRYOMODULE	
CAD: I-DEAS	SOLID MODEL NO.: N/A	

FERMI NATIONAL ACCELERATOR LABORATORY
UNITED STATES DEPARTMENT OF ENERGY
P.O. BOX 500, BATAVIA, IL 60510-0500

TITLE: CM2 CRYOMODULE
CM2 DIPOLE
SUPPORT_BAR_LOVER

SIZE	CAGE CODE	DWG NO.	REV
A3	0U5R6	D00000000857355	A

SCALE 2:1 | DO NOT SCALE DWG | SHEET 1 OF 1

NOTES (UNLESS OTHERWISE SPECIFIED):

1. PARTS TO BE FREE OF ALL SHARP EDGES, CORNERS AND BURRS. A MAXIMUM CHAMFER OF 0.5 mm X 45° IS ALLOWED.
2. PARTS MUST BE FREE OF DIRT, GREASE, OIL AND CHIPS.
3. DIMENSION IN [.XX] ARE IN INCHES.
4. ALL DIMENSIONS REPRESENT FINAL MACHINED SIZES. EXTRA MATERIAL STOCK WILL BE REQUIRED, SEE DRAWING 857305 FOR FINAL MACHINED SPECIFICATION OF THIS PART.

REVISION HISTORY

CAD MAINTAINED. CHANGES SHALL BE INCORPORATED BY THE DESIGN ACTIVITY.

ZONE	REV	DESCRIPTION	DATE	APPROVED
	A	INITIAL RELEASE - ER # ILC-000010		

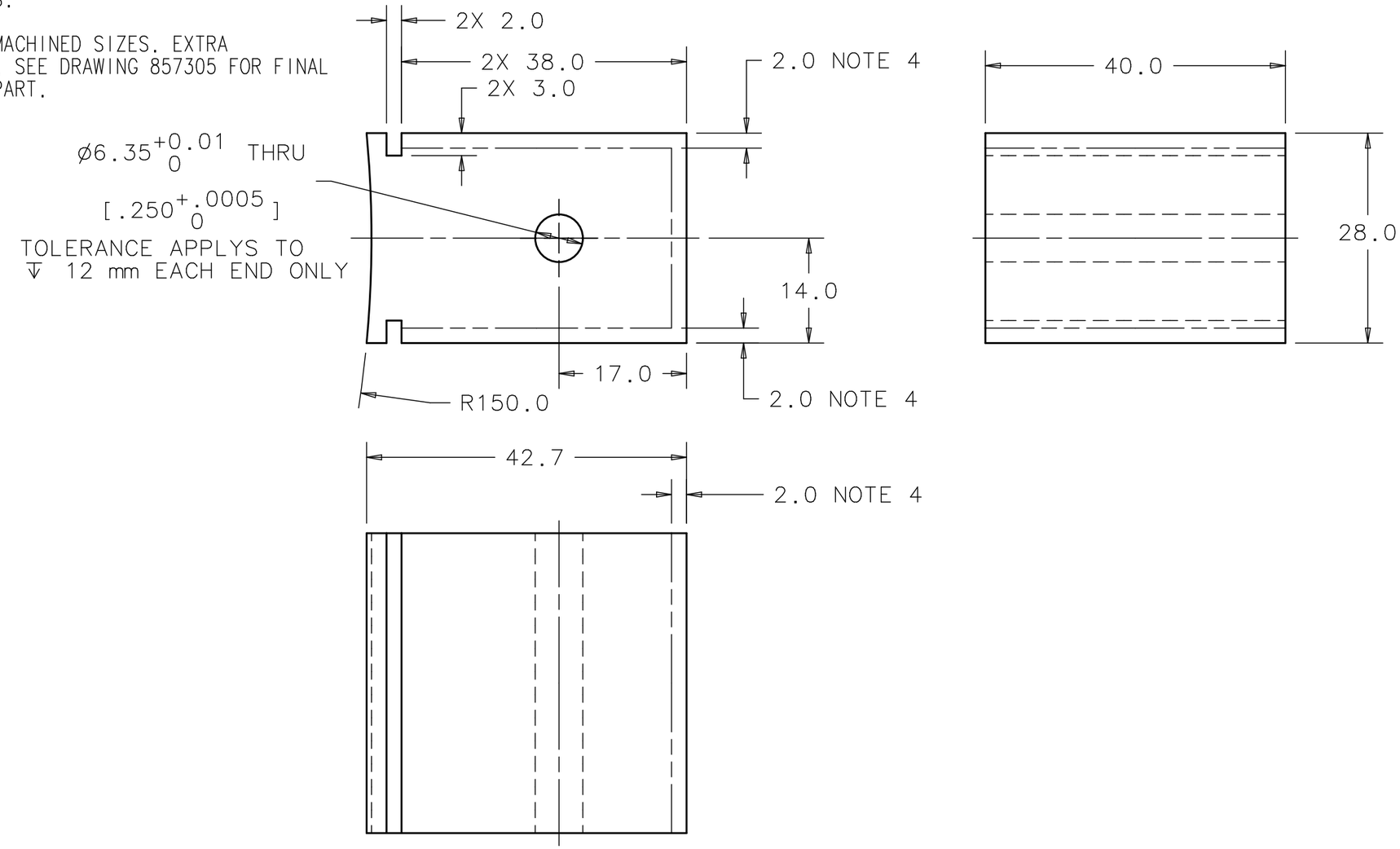

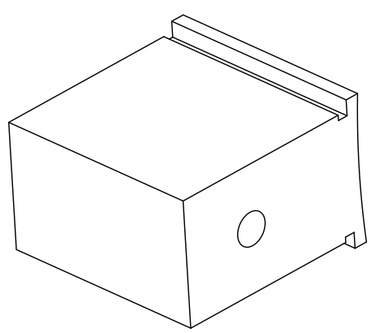

ISOMETRIC VIEW AFTER MACHINING.
SEE DR. # 857305

ITEM	P.I.N.	DESCRIPTION	QTY

PARTS LIST

-	857305
NEXT ASSY	USED ON

APPLICATION

FINISH: N/A

MATERIAL: ST. STEEL 316L

UNLESS OTHERWISE SPECIFIED:
DIMENSIONS ARE IN MILLIMETERS
INTERPRET DIM PER ASME Y14.5M-1994
BREAK ALL SHARP EDGES .75 MAX.
ALL MACH. SURFACES 3.2 MAX.

TOLERANCES: X ± 1, .X ± 0.5, .XX ± 0.15, ANGLE ± 1°

THIRD ANGLE PROJECTION

DRAWN BY	Y. ORLOV	DATE	01OCT08
CHECKED BY	D. ARNOLD	DATE	24FEB09
ENGINEERED BY	Y. ORLOV	DATE	25FEB09
DATABASE	DESY EDMS	TEAM/GROUP	T4CM CRYOMODULE
CAD	I-DEAS	SOLID MODEL NO.	N/A

FERMI NATIONAL ACCELERATOR LABORATORY
UNITED STATES DEPARTMENT OF ENERGY
P.O. BOX 500, BATAVIA, IL 60510-0500

TITLE
CM2 CRYOMODULE
CM2 DIPOLE
ROLLER-PAD_DIPOLE

SIZE	CAGE CODE	DWG NO.	REV
A3	0U5R6	D00000000857315	A

SCALE 1:2 | DO NOT SCALE DWG | SHEET 1 OF 1

REVISION HISTORY CAD MAINTAINED. CHANGES SHALL BE INCORPORATED BY THE DESIGN ACTIVITY.				
ZONE	REV	DESCRIPTION	DATE	APPROVED
	A	INITIAL RELEASE - ER # ILC-000010		
C12	B	ECO# ILC-00013 CHANGE NOTE 1	19MAR2009	D. MITCHELL

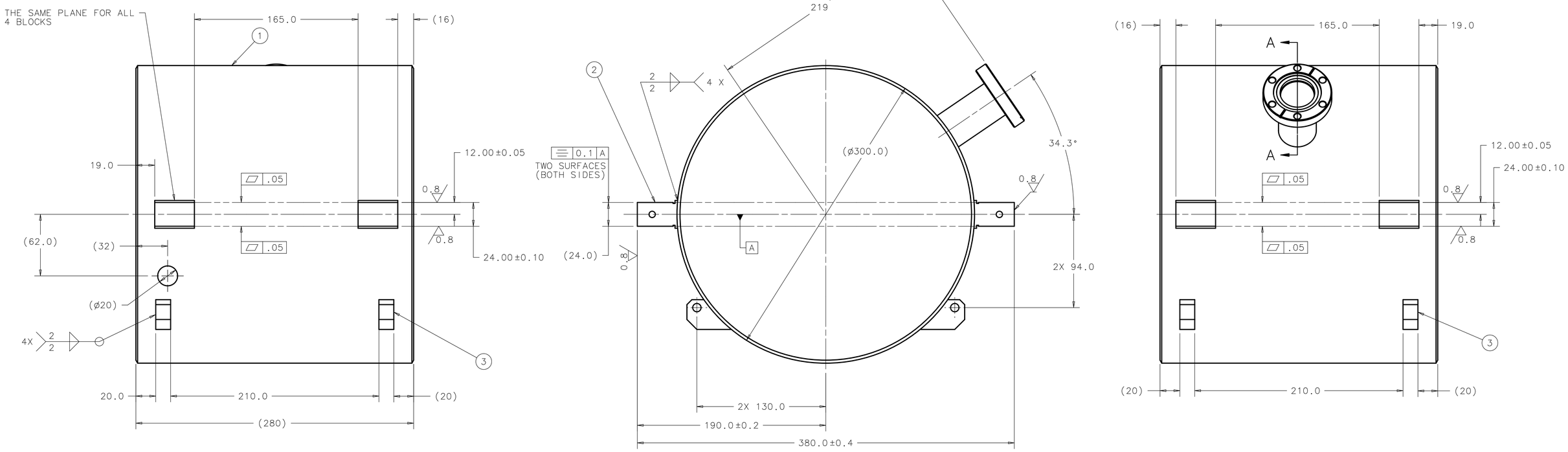

NOTES (UNLESS OTHERWISE SPECIFIED):

1. FABRICATE PER ASME "BOILER & PRESSURE VESSEL CODE", SECTION VIII, DIVISION 1.
2. THE FOLLOWING DOCUMENTS SHALL BE SUPPLIED WITH DELIVERY OF WELDMENT:
   A. WELD PROCEDURE SPECIFICATION (WPS).
   B. PROCEDURE QUALIFICATION RECORDS (PQR).
   C. WELDER PERFORMANCE QUALIFICATION (WPQ).
   D. EXAMINATION REPORT.
3. LEAK TEST TO BE PERFORMED AT FERMILAB BEFORE ACCEPTANCE.
4. WELDS TO BE VACUUM TIGHT, NO LEAK SHALL BE DETECTABLE ON THE MOST SENSITIVE SCALE OF A HELIUM DETECTOR WITH A MIN SENSITIVITY OF 2 X 10^{-10} ATM. CC/SEC.
5. INTERIOR WELDS TO BE AS SMOOTH AS POSSIBLE, FINISH GRIND SMOOTH MAY BE REQUIRED TO OBTAIN A SMOOTH TRANSITION.
6. ASSEMBLY MUST BE FREE FROM DIRT, GREASE, OIL AND CHIPS; AND PROPERLY PACKED TO AVOID DAMAGE TO FLANGES SEALING SURFACES.

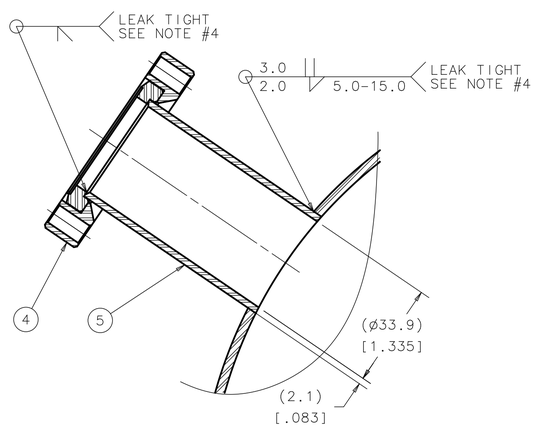

SECTION A-A
SCALE 1:1

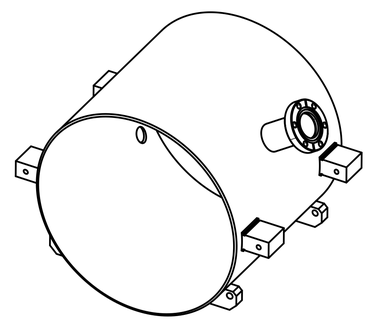

ITEM	P.I.N.	DESCRIPTION	QTY
5	864645	PIPE DIPOLE HE-OUT	1
4	COM'L	MDC DEL SEAL CF FLANGE, 2-3/4" OD-ROTATABLE, # 100014, ST.STEEL 316L	1
3	861285	SUPPORT INST DIPOLE	4
2	857315	ROLLER-PAD DIPOLE	4
1	857295	SHELL-He MAG VESSEL	1

PARTS LIST

858535	857335
NEXT ASSY	USED ON
APPLICATION	

FINISH: N/A

MATERIAL: SEE PARTS LIST

UNLESS OTHERWISE SPECIFIED:
DIMENSIONS ARE IN MILLIMETERS
INTERPRET DIM PER ASME Y14.5M-1994
BREAK ALL SHARP EDGES .75 MAX.
ALL MACH. SURFACES 3.2 MAX.

TOLERANCES: X ± 1, .X ± 0.5, .XX ± 0.15, ANGLE ± 1°

THIRD ANGLE PROJECTION

DRAWN BY Y. ORLOV	DATE 010CT08	
CHECKED BY D. ARNOLD	DATE 24FEB09	
ENGINEERED BY H. CARTER	DATE 26FEB09	
DATABASE DESY EDMS	TEAM/GROUP T4CM CRYOMODULE	
CAD I-DEAS	SOLID MODEL NO. D00000000707883	

FERMI NATIONAL ACCELERATOR LABORATORY
UNITED STATES DEPARTMENT OF ENERGY
P.O. BOX 500, BATAVIA, IL 60510-0500

TITLE
CM2 CRYOMODULE
CM2 DIPOLE
SHELL_DIPOLE_WLDMT

SIZE	CAGE CODE	DWG NO.	REV
A1	0U5R6	D00000000857305	B

SCALE 1:2 | DO NOT SCALE DRAWING | SHEET 1 OF 1

REVISION HISTORY CAD MAINTAINED. CHANGES SHALL BE INCORPORATED BY THE DESIGN ACTIVITY.				
ZONE	REV	DESCRIPTION	DATE	APPROVED
	A	INITIAL RELEASE - ER # ILC-000010		
B6	B	ECO# ILC-00013 ADD NOTES 3 & 4	19MAR2009	D. MITCHELL

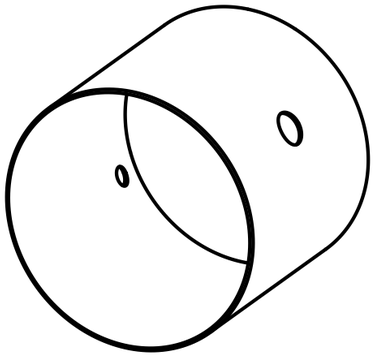

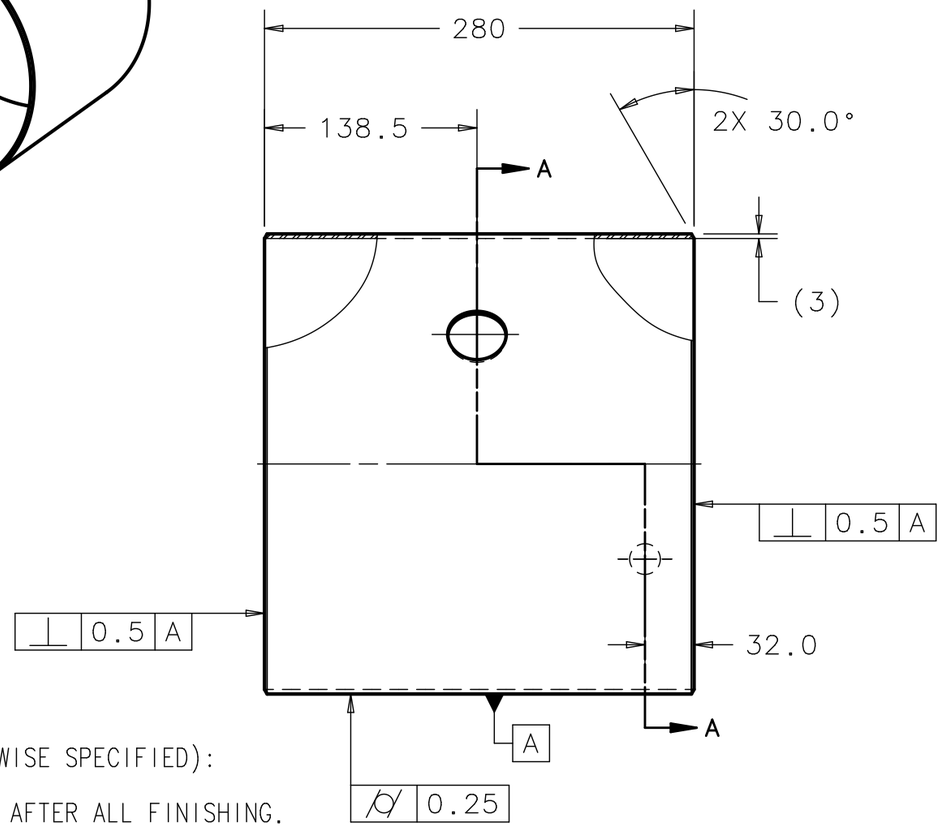

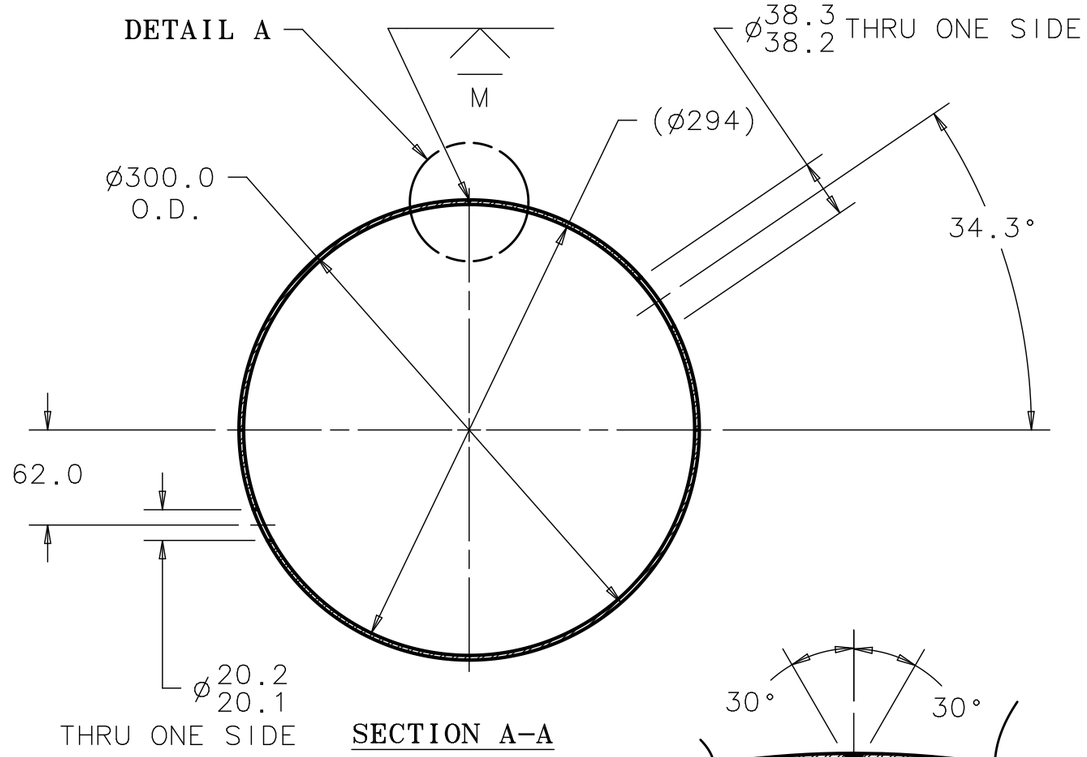

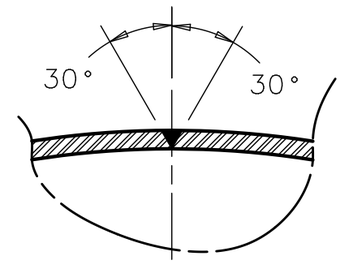

DETAIL A
SCALE 1:1

NOTES (UNLESS OTHERWISE SPECIFIED):

1. DIMENSIONS APPLY AFTER ALL FINISHING.
2. PART TO BE DEBURRED.
3. FABRICATE PER ASME "BOILER & PRESSURE VESSEL CODE", SECTION VIII, DIVISION 1.
4. 2. THE FOLLOWING DOCUMENTS SHALL BE SUPPLIED WITH DELIVERY OF WELDMENT:
   A. WELD PROCEDURE SPECIFICATION (WPS).
   B. PROCEDURE QUALIFICATION RECORDS (PQR).
   C. WELDER PERFORMANCE QUALIFICATION (WPQ).
   D. EXAMINATION REPORT.
5. WELDS TO BE VACUUM LEAK TIGHT, NO LEAK SHALL BE DETECTABLE ON THE MOST SENSITIVE SCALE A HELIUM DETECTOR WITH A MIN SENSITIVITY OF 2×10^{-10} ATM. CC/SEC

-	857335
NEXT ASSY	USED ON
APPLICATION	

FINISH N/A	UNLESS OTHERWISE SPECIFIED: DIMENSIONS ARE IN MILLIMETERS INTERPRET DIM PER ASME Y14.5M-1994 BREAK ALL SHARP EDGES .75 MAX. ALL MACH. SURFACES 3.2 MAX.	DRAWN BY Y. ORLOV	DATE 01OCT08
		CHECKED BY D. ARNOLD	DATE 24FEB09
		ENGINEERED BY Y. ORLOV	DATE 25FEB09
MATERIAL ST.STEEL 316L	TOLERANCES X ± 1 .X ± 0.5 .XX ± 0.15 ANGLE ± 1°	THIRD ANGLE PROJECTION	
		DATABASE DESY EDMS	TEAM/GROUP T4CM CRYOMODULE
		CAD I-DEAS	SOLID MODEL NO. D00000001025702

FERMI NATIONAL ACCELERATOR LABORATORY
UNITED STATES DEPARTMENT OF ENERGY
P.O. BOX 500, BATAVIA, IL 60510-0500

TITLE
CM2 CRUOMODULE
CN2 DIPOLE
SHELL_HE_MAG_VESSEL

SIZE	CAGE CODE	DWG NO.	REV
A3	0U5R6	D00000000857295	B
SCALE 1:4	DO NOT SCALE DWG	SHEET 1 OF 1	