NOTES (UNLESS OTHERWISE SPECIFIED):

1. ALL DIMENSIONS, UNLESS SPECIFIED, ARE IN ROOM TENPERATURE.
2. ASSEMBLY PER FERMILAB ENGINEERING SPECIFICATION: 5520.000-ES-
3. CLEAN ALL WELDABLE SURFACES BEFORE WELDING.
4. MAINTAIN A DIRT & GREASE - FREE WORKING ENVIRONMENT. KEEPS ALL PARTS AND ASSEMBLIES FREE OF DIRT, GREASE, OIL AND CHIPS.
5. FABRICATE ALL PIPING CONNECTION PER ASME B31.3, MORMAL FLUID SEVICES.
6. THE FOLLOWING DOCUMENTS SHALL BE SUPPLIED:
   A. WELDS PROCEDURE SPECIFICATION (WPS).
   B. PROCEDURE QUALIFICATION RECORDS (PQR).
   C. WELDER PERFORMANCE QUALIFICATION (WPQ).
   D. EXAMINATION REPORT.
7. ALL CONTINUOUS WELDS TO BE VACUUM LEAK TIGHT. NO LEAK SHALL BE DETECTABLE ON THE MOST SENSITIVE SCALE OF A HELIUM LEAK DETECTOR WITH A MINIMUM SENSITIVITY OF 10^{-10} ATM. CC/SEC.
8. PROTECT ALL SEALING SURFACES FROM DENTS AND SCRATCHES.

REVISION HISTORY

CAD MAINTAINED. CHANGES SHALL BE INCORPORATED BY THE DESIGN ACTIVITY.

ZONE	REV	DESCRIPTION	DATE	CHECKED	APPROVED
	A	INITIAL RELEASE			

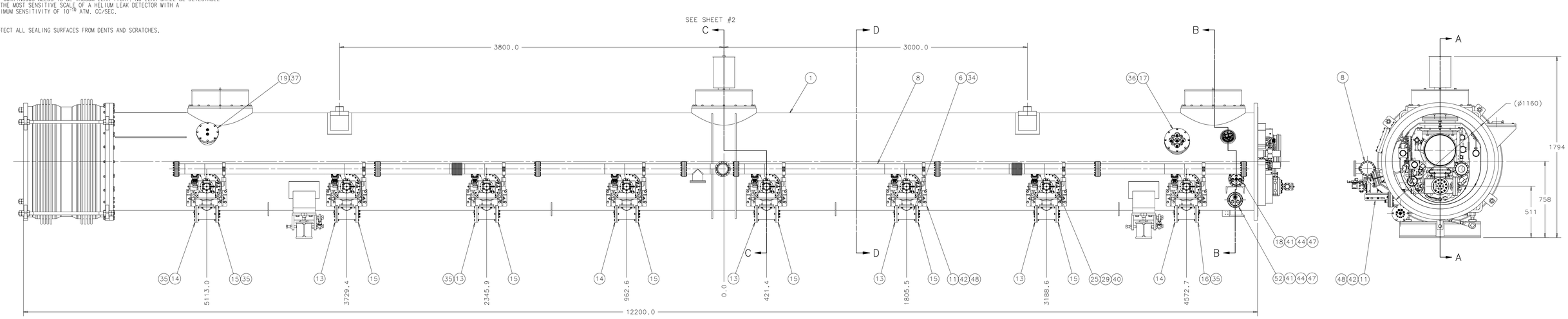

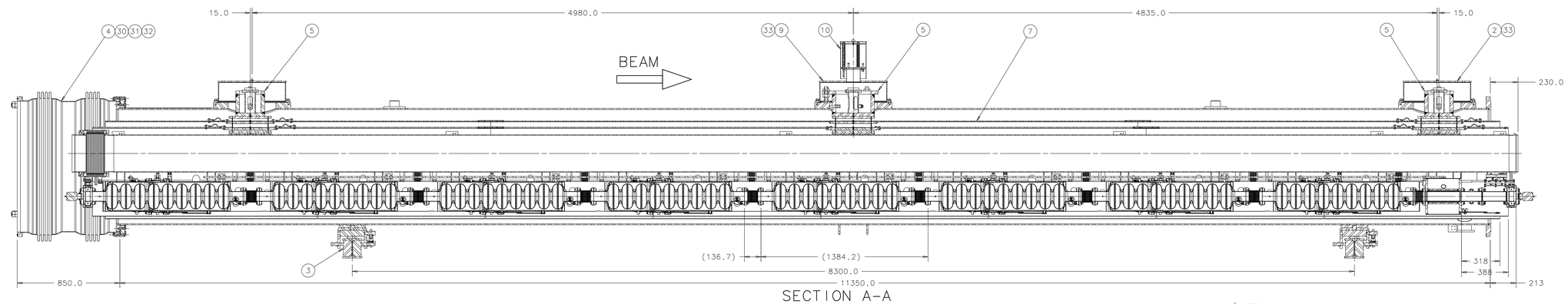

SECTION A-A

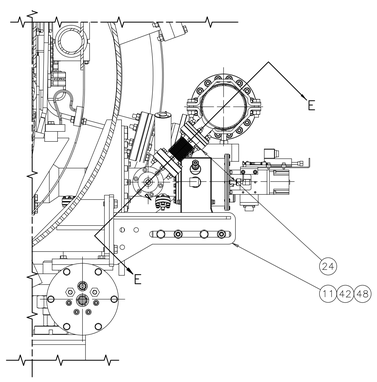

DETAIL_SECTION D-D
SCALE 0.200

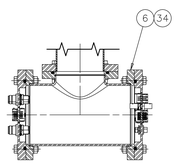

DETAIL_SECTION F-F
SCALE 1/4

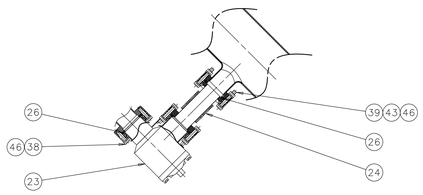

DETAIL_SECTION E-E
SCALE 1/4

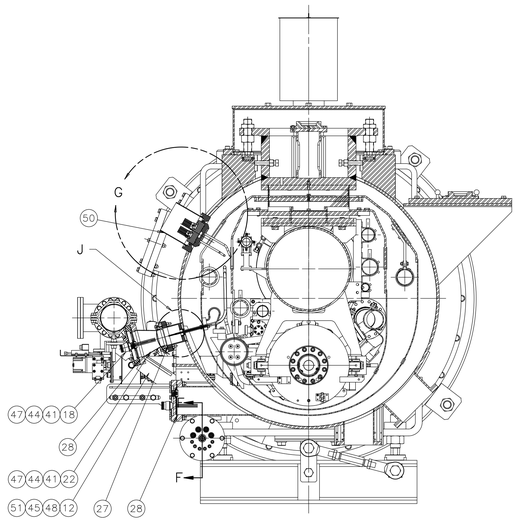

SECTION B-B
SCALE 1/8

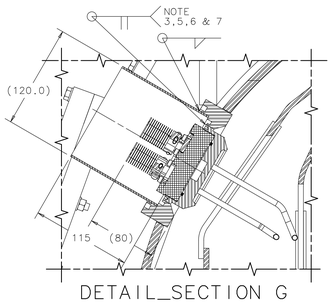

DETAIL_SECTION G
SCALE 0.400

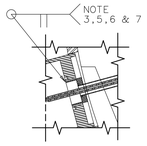

DETAIL_SECTION J
SCALE 1/2

ITEM	P.I.N.	DESCRIPTION	QTY
52	960675	FLANGE C-1 ASSY	1
51	COM'L	HHCS M10-1.5X35, 316SS	24
50	COM'L	PIPE 120-OD, 2.5-WALL (MM), 316SS	1
49	COM'L	SCR-PAN HD SLOT M4-0.7X8, 316SS	64
48	COM'L	WASHER M10, 316SS	96
47	COM'L	WASHER M8, 316SS	80
46	COM'L	WASHER M6, 316SS	240
45	COM'L	HEX NUT M10-1.5, 316SS	24
44	COM'L	HEX NUT M8-1.25, 316SS	40
43	COM'L	HEX NUT M6-1.0, 316SS	96
42	COM'L	HHCS M10-1.5X30, 316SS	48
41	COM'L	HHCS M8-1.25X55, 316SS	40
40	COM'L	HHCS M8-1.25X30, 316SS	192
39	COM'L	HHCS M6-1.0X40, 316SS	96
38	COM'L	HHCS M6-1.0X25, 316SS	48
37	COM'L	O-RING, ø170.8Xø5.35 (MM), EPDM (DESY)	1
36	COM'L	O-RING, ø196.2Xø5.35 (MM), EPDM (DESY)	1
35	COM'L	O-RING, ø116.84Xø5.35 (MM), EPDM (DESY)	16
34	COM'L	O-RING, ø94.6Xø5.34 (MM), EPDM (DESY)	8
33	COM'L	O-RING, ø557Xø7 (MM), EPDM (DESY)	3
32	COM'L	O-RING, ø1052Xø8 (MM), EPDM (DESY)	1
31	COM'L	O-RING, ø1085Xø8 (MM), EPDM (DESY)	1
30	COM'L	O-RING, ø1118Xø8 (MM), EPDM (DESY)	1
29	COM'L	CENTERING RING WITH O-RING ISO-200	8
28	COM'L	COPPER GASKET MDC P/N 191013	2
27	COM'L	COPPER GASKET MDC P/N 191009	1
26	COM'L	COPPER GASKET MDC P/N 191004	24
25	2964328/0.008	BIG FLANGE ON VACUUM VESSEL	8
24	COM'L	FLAXIBLE COUPLING MDC P/N 400003	8
23	COM'L	VAT VALVE ANGLE 54032-GE02-0002	8
22	COM'L	NIPPLE REDUCER-CONICAL MDC P/N 402038, OR ANALOG	1
21	882165	ANTENNA ADJUST MECHANISM	8
20	0988356/0.00	FTP-EINKOPPLER III	8
19	926685	FLANGE-K ASSY	1
18	911245	FLANGE-C ASSY	1
17	907565	FLANGE FEEDTHRU-D ASSY	1
16	927205	FLANGE-B8 ASSY	1
15	927255	FLANGE-B ASSY	7
14	926195	FLANGE-A1 ASSY	3
13	926215	FLANGE-A ASSY	5
12	1999158/0.00	LINE COUPLING HOLDER, ITEM6	8
11	2999154/0.00	MC MOUNTING BRACKETS	8
10	919085	VALVE RELIEF-4 INCH-0.5 PSI	1
9	909435	CAP-COVER RELIEF FLANGE WLDMT	1
8	874935	LINE COUPLING-PIPING ASSY	1
7	906795	COLD MASS CM-2 ASSY	1
6	00682050060	T-WELDMENT, ITEMS: 5,14,15&16 (DESY)	8
5	TTF-CRY3-02.03.00	ADJUSTABLE SUPPORTING BRACKED (INFN)	2+1
4	TTF-CRY3-01.03.00	UNIVERSAL EXPANSION JOINT (INFN)	1
3	TTF-CRY3-01.02.00	ADJUSTABLE SUPPORT ASSEMBLY (INFN)	2
2	TTF-CRY3-01.01.01	SUPPORT POST COVER (INFN)	2
1	00682050040	VACUUM VESSEL SHELL ASSEMBLY (DESY)	1

PARTS LIST

NEXT ASSY	USED ON
-	-

APPLICATION

FINISH: N/A

MATERIAL: SEE PART LIST

UNLESS OTHERWISE SPECIFIED:
DIMENSIONS ARE IN MILLIMETERS
INTERPRET DIM PER ASME Y14.5M-1994
BREAK ALL SHARP EDGES .75 MAX.
ALL MACH. SURFACES 3.2 MAX.

TOLERANCES: X ± 2, .X ± 0.8, .XX ± 0.13, ANGLE ± 1°

THIRD ANGLE PROJECTION

		DATE
DRAWN BY	Y. ORLOV	14JUL11
CHECKED BY		DATE
ENGINEERED BY		DATE
DATABASE	DESY EDMS	TEAM/GROUP
CAD	I-DEAS	SOLID MODEL NO. D00000000849693

FERMI NATIONAL ACCELERATOR LABORATORY
UNITED STATES DEPARTMENT OF ENERGY
P.O. BOX 500, BATAVIA, IL 60510-0500

TITLE: CRYOMODULE 2 TOP ASSEMBLY CRYOMODULE-2_ASSEMBLY

SIZE	CAGE CODE	DWG NO.	REV
A0	0U5R6	D00000000933265	A

SCALE 1:8 | DO NOT SCALE DRAWING | SHEET 1 OF 1

Created: 09:50:36 on 14-07-11 (D-M-Y) By: orlov State: 1-INITIAL

REVISION HISTORY					
CAD MAINTAINED. CHANGES SHALL BE INCORPORATED BY THE DESIGN ACTIVITY.					
ZONE	REV	DESCRIPTION	DATE	CHECKED	APPROVED
	A	INITIAL RELEASE			

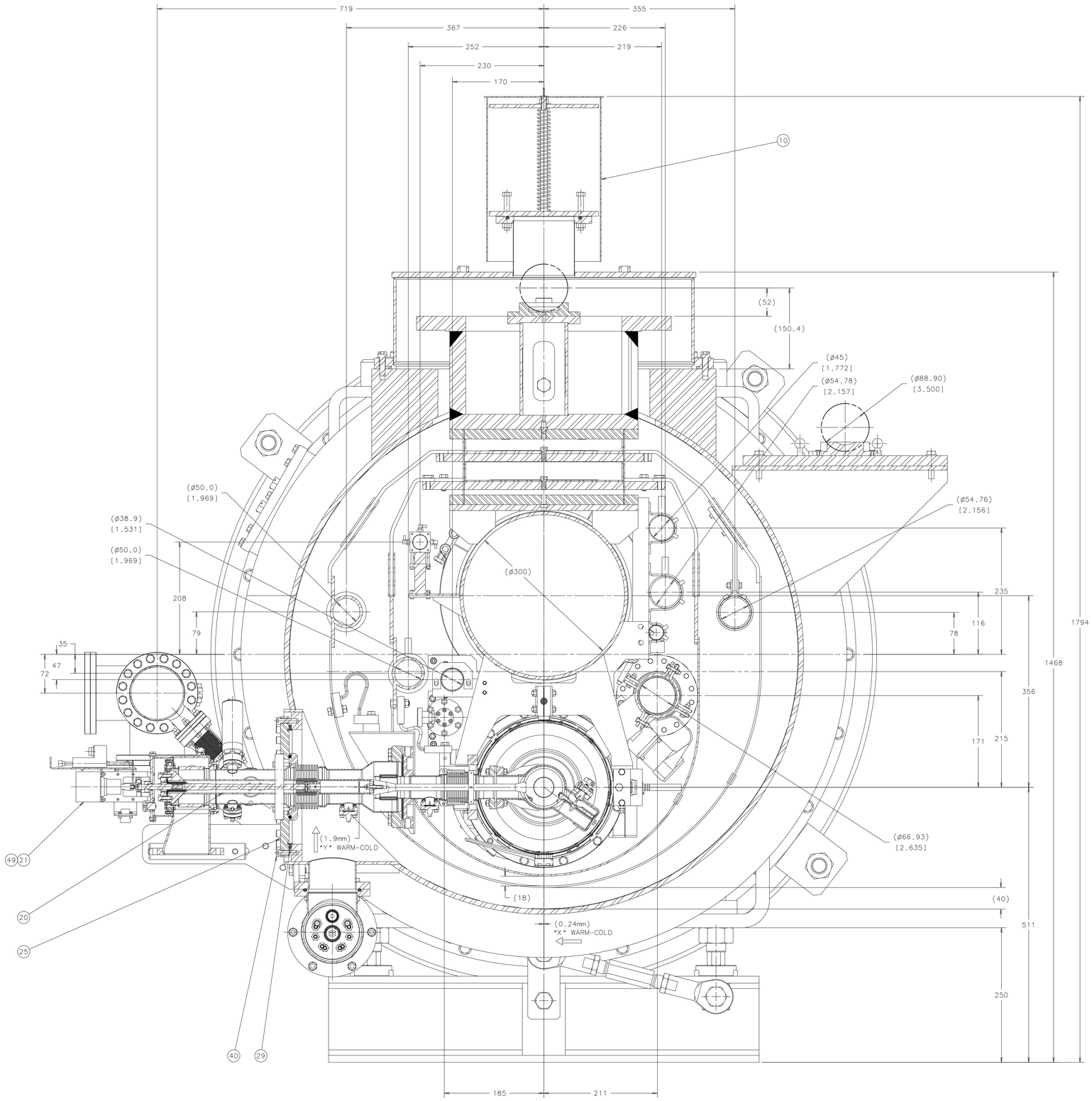

SECTION C-C
SCALE 0.4

–	–
NEXT ASSY	USED ON
APPLICATION	

FINISH: N/A

MATERIAL: SEE PART LIST

UNLESS OTHERWISE SPECIFIED:
DIMENSIONS ARE IN MILLIMETERS
INTERPRET DIM PER ASME Y14.5M-1994
BREAK ALL SHARP EDGES .75 MAX.
ALL MACH. SURFACES 3.2 MAX.

TOLERANCES: X ± 2, .X ± 0.8, .XX ± 0.13, ANGLE ± 1°

THIRD ANGLE PROJECTION

DRAWN BY: Y. ORLOV	DATE: 14JUL11	
CHECKED BY	DATE	
ENGINEERED BY	DATE	
DATABASE: DESY EDMS	TEAM/GROUP	
CAD: I-DEAS	SOLID MODEL NO.: D00000000849693	

FERMI NATIONAL ACCELERATOR LABORATORY
UNITED STATES DEPARTMENT OF ENERGY
P.O. BOX 500, BATAVIA, IL 60510-0500

TITLE
CRYOMODULE 2 TOP ASSEMBLY CRYOMODULE-2_ASSEMBLY

SIZE	CAGE CODE	DWG NO.	REV
A0	0U5R6	D00000000933265	A

SCALE 1:8 | DO NOT SCALE DRAWING | SHEET OF 1