NOTES (UNLESS OTHERWISE SPECIFIED):

1. ASSEBLY MUST BE FREE OF DIRT, GREASE, OIL AND CHIPS.
2. DIMENSIONS IN [ ] ARE IN INCHES.
3. SEALING SURFACES MUST BE FREE OF SCRATCHES AND NICKS WITH NO RADIAL SCORING.
3. VENDOR SHALL SUPPLY THE PART SUFFICIENTLY PACKAGED TO PROTECT THE FINISH AND INTEGRITY DURING SHIPMENT AND STORAGE. THE PACKAGE SHALL BE PROMINENTLY MARKED WITH THE PART NUMBER AND REVISION LEVEL.
4. RELIEF PRESSURE: 1 ATM + 0.5 PSI

SPRING PARAMETERS:

SPRING MATERIAL: MUSIC WIRE
WIRE OD: .125 IN
SPRING OD: .970 IN
FREE LEMGTH: 8 IN
SPRING RATE: 7.00 LBF/IN
MAX LOAD: 30.9 LBF
NUMBER OF COILS: 27

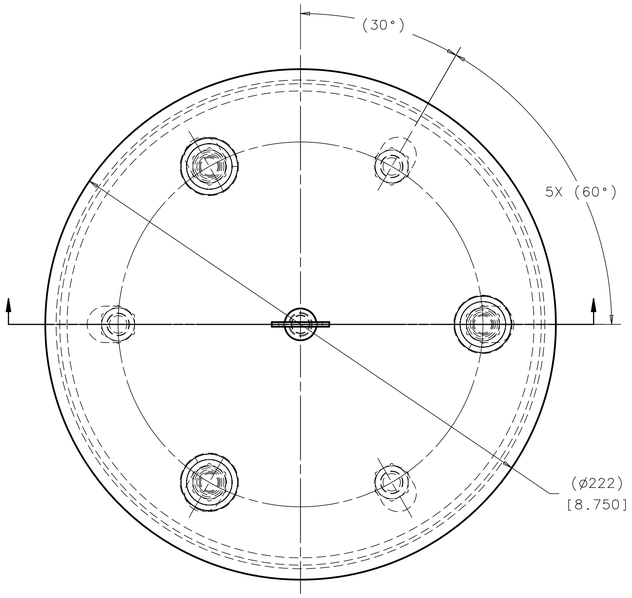

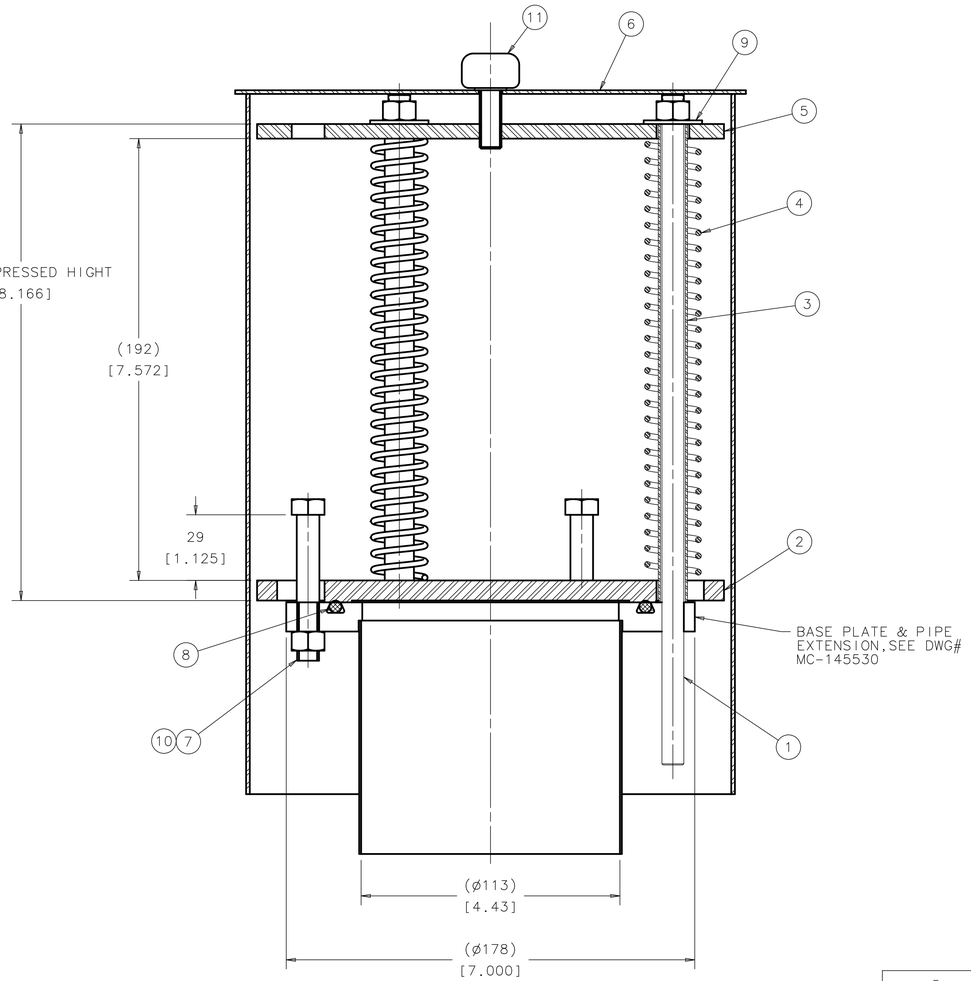

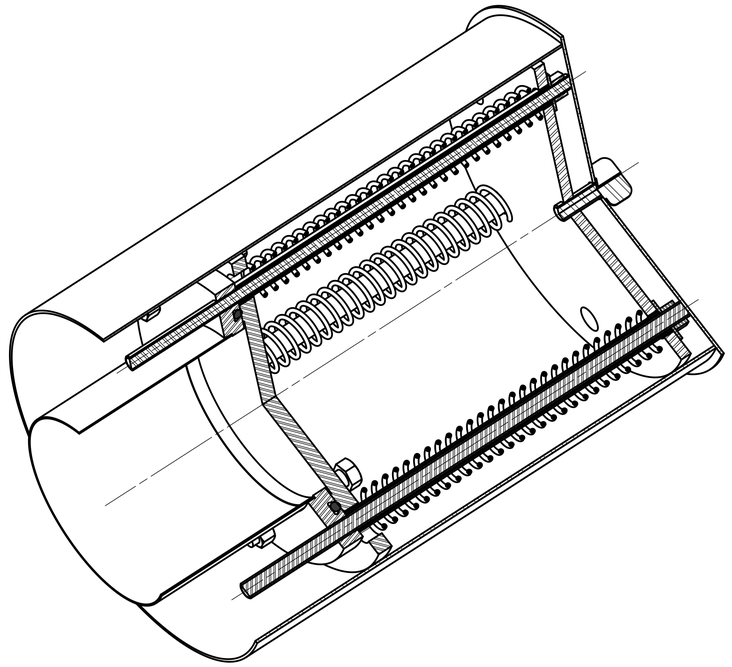

REVISION HISTORY

CAD MAINTAINED. CHANGES SHALL BE INCORPORATED BY THE DESIGN ACTIVITY.

ZONE	REV	DESCRIPTION	DATE	APPROVED
	A	INITIAL RELEASE ER# ILC-000120		
B3 B3 C3	B	ECO# 000150 ITEM 1 P/N WAS ME-146303 ITEM 5 P/N WAS MB-145618 ADDED ITEM 11	16-MAY-11	Y. ORLOV

ITEM	P.I.N.	DESCRIPTION	QTY
11	COM'L	THUMB SCR, 3/8"-16 THREAD, 18-8 S.S. MCMASTER# 91745A624 OR EQUV.	3
10	COM'L	HEX NUT 3/8-16 THREAD ST.STEEL	3
9	COM'L	WASHER FLAT,3/8 SCREW SIZE, 1"-OD .04"-.06"-THICK, ST.STEEL	3
8	COM'L	O-RING, VITON, PARKER # 2-354	1
7	COM'L	SCREW 3/8-16 THREAD, 2-1/2"-LENGTH ST.STEEL	3
6	MB-145618	WEATHER CAP	1
5	MB-145534	RETAINER PLATE	1
4	COM'L	COMPRESSION SPRING JONES SPRING CATALOG #: C32-095-256	3
3	919095	TUBING SPACER	3
2	MC-145616	LIFT PLATE	1
1	MA-145603	THREADED ROD & NUT	3

PARTS LIST

NEXT ASSY	USED ON
-	-

APPLICATION

FINISH: N/A

MATERIAL: SEE PART LIST

UNLESS OTHERWISE SPECIFIED:
DIMENSIONS ARE IN MILLIMETERS
INTERPRET DIM PER ASME Y14.5M-1994
BREAK ALL SHARP EDGES .75 MAX.
ALL MACH. SURFACES 3.2 MAX.

TOLERANCES: X ± 2, .X ± 0.8, .XX ± 0.13, ANGLE ± 1°

THIRD ANGLE PROJECTION

DRAWN BY Y.ORLOV	DATE 26AUG10	
CHECKED BY D. MITCHELL	DATE 26AUG10	
ENGINEERED BY Y.ORLOV	DATE 30AUG10	
DATABASE DESY EDMS	TEAM/GROUP	
CAD I-DEAS	SOLID MODEL NO. D00000000888243	

FERMI NATIONAL ACCELERATOR LABORATORY
UNITED STATES DEPARTMENT OF ENERGY
P.O. BOX 500, BATAVIA, IL 60510-0500

TITLE
CM2
VACUUM VESSEL
VALVE_RELIEF-4_INCH_0_5_PSI

SIZE	CAGE CODE	DWG NO.	REV
A1	0U5R6	D00000000919085	B

SCALE 3/4 | DO NOT SCALE DRAWING | SHEET 1 OF 1

Created: 08:58:30 on 17-05-11 (D-M-Y) By: victormm State: 1-INITIAL