REV	DESCRIPTION	DRAWN	DATE
		APPROVED	DATE
A	CHANGED PARENT ASSEMBLY UPDATED DRAWING TO REFLECT CHANGE	E.PIRTLE	19-DEC-2008
		M.FOLEY	06-JAN-2008

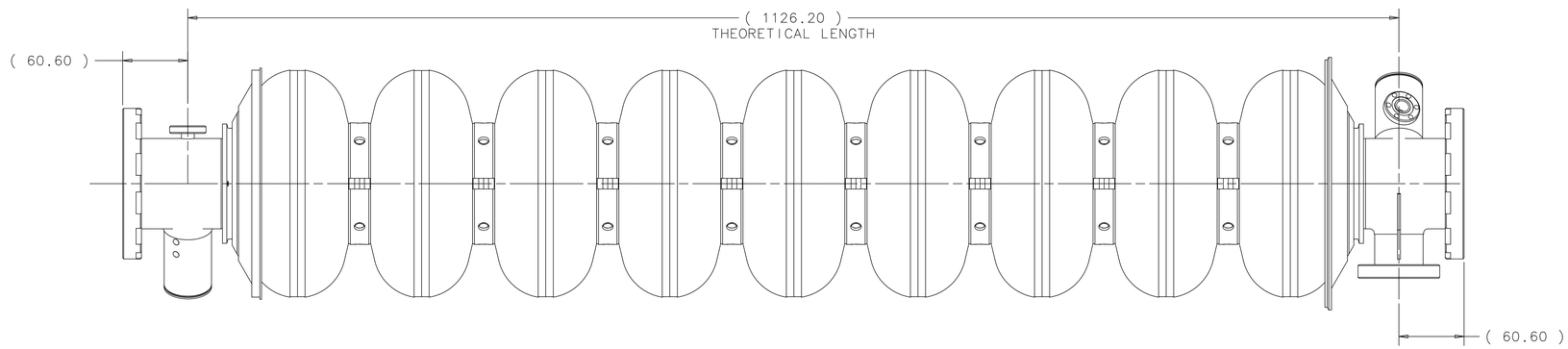

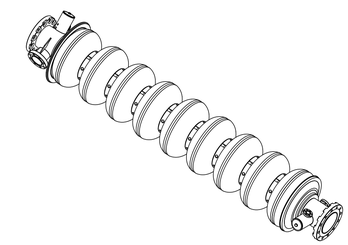

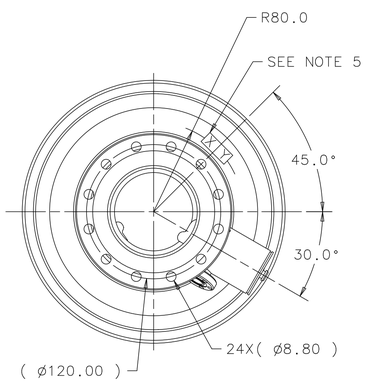

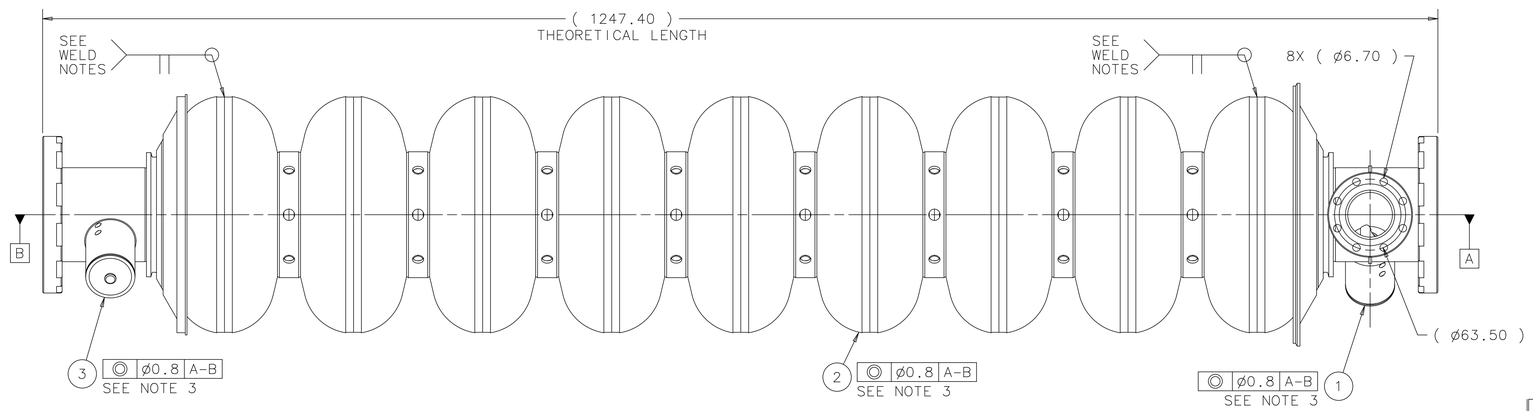

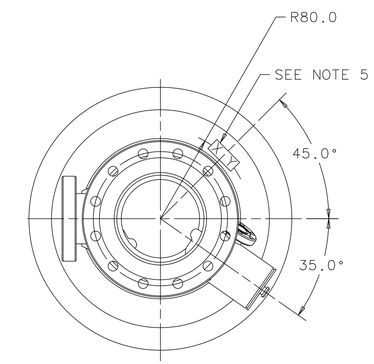

ITEM	PART NO.	DESCRIPTION OR SIZE	QTY.
3	MD-440003	FNAL END HALF CELL ASSEMBLY (LONG VERSION)	1
2	MD-439173	DESY DUMBBELL WELDMENT ASSEMBLY	1
1	MD-439180	DESY END HALF CELL ASSEMBLY (SHORT VERSION)	1

PARTS LIST

NOTES

1) THIS DEVICE IS EASILY DEFORMED. A FIXTURE IS REQUIRED FOR ALL HANDLING.

2) ENSURE THAT THE CLOCKING OF THE SUB-ASSEMBLIES ARE HELD TO ±0.5°

3) ITEMS 1,2, AND 3 ARE TO BE CONCENTRIC WITHIN ø0.4MM ALONG DATUMS A AND B

4) DEFINITION OF FORM AND TOLERANCES CONCERNING WELD JOINT PREPARATION AT THE IRIS AND THE EQUATOR TO BE COORDINATED BETWEEN MANUFACTURERS AND FNAL

5) PUNCH 4MM HIGH, 0.2MM DEEP LETTERS X=FIRM CODE Y=MANUFACTURING NUMBER

WELDING NOTES:
1) ASSEMBLY TO BE VACUUM TIGHT. NO LEAK SHALL BE DETECTABLE ON THE MOST SENSITIVE SCALE OF A HELIUM MASS SPECTROMETER LEAK DETECTOR WITH A MINIMUM SENSITIVITY OF 2×10^{-10} ATM-CC/SEC FOR HELIUM.
2) ASSEMBLY TO BE CLEANED, AND PACKAGED SO AS TO ASSURE NO CONTAMINATION FROM FOREIGN MATERIALS, METAL CHIPS OR OTHER CONTAMINATES. CLEANING PROCEDURE TO BE APPROVED BY FERMILAB.
3) ALL DESIGN, ASSEMBLY, AND HANDLING IS TO CONFORM TO STANDARD ULTRA HIGH VACUUM PRACTICES
4) ALL ELECTRON BEAM WELDING, ACID ETCHING, CLEANLINESS, AND HANDLING PROCEDURES ARE DETAILED IN DESY SPECIFICATION MHF-SL 1-1999 AND MUST BE FOLLOWED.

UNLESS OTHERWISE SPECIFIED			ORIGINATOR	M.FOLEY	17-OCT-2005
.X	.XX	ANGLE	DRAWN	E.PIRTLE	17-OCT-2005
± 1.0	± 0.20	±0.5°	CHECKED	M.FOLEY	25-OCT-2005
			APPROVED	M.FOLEY	25-OCT-2005

1. BREAK ALL SHARP EDGES 0.40 MAX.
2. DO NOT SCALE DRAWING.
3. DIMENSIONS BASED UPON ASME Y14.5M-1994
4. MAX. ALL MACH. SURFACES N7
5. DRAWING UNITS: METRIC

USED ON

MATERIAL
SEE PARTS LIST

FERMI NATIONAL ACCELERATOR LABORATORY
UNITED STATES DEPARTMENT OF ENERGY

FNAL 1.3GHZ TESLA RF CAVITY ASSEMBLY

SCALE	DRAWING NUMBER	SHEET	REV
1:2	4904.010-MD-440004	1 OF 1	A

CREATED WITH : Ideas12NXSeries | GROUP: ACCELERATOR MECH. SUPPT.

PARTS OF THIS DESIGN IS THE INTELLECTUAL PROPERTY OF DESY ACCORDING TO DIN 34 / ISO 16016. PARTS OF THIS DRAWING HAVE BEEN REDRAWN WITH DESY'S PERMISSION FOR FABRICATION PURPOSES WITHIN THE USA AND IS TO BE USED EXCLUSIVELY WITHIN FERMILAB. USAGE OUTSIDE OF FERMILAB MUST BE APPROVED BY DESY.

REV	DESCRIPTION	DRAWN	DATE
		APPROVED	DATE

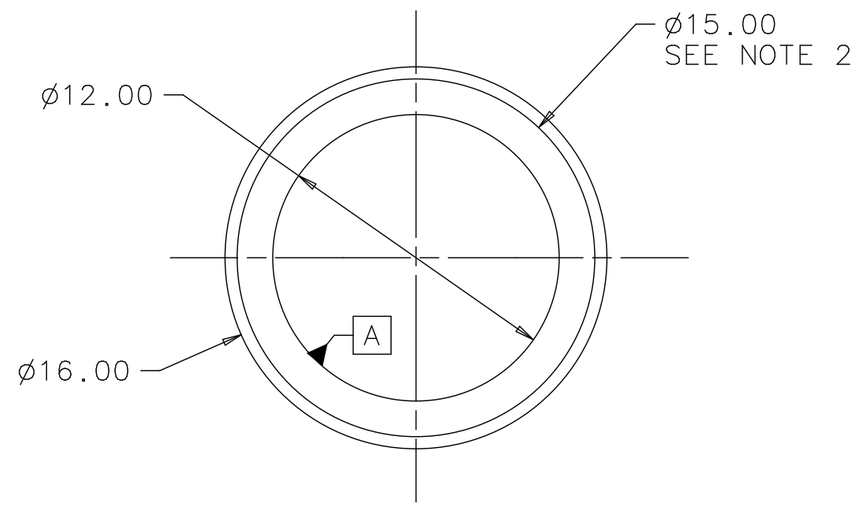

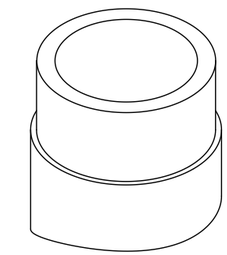

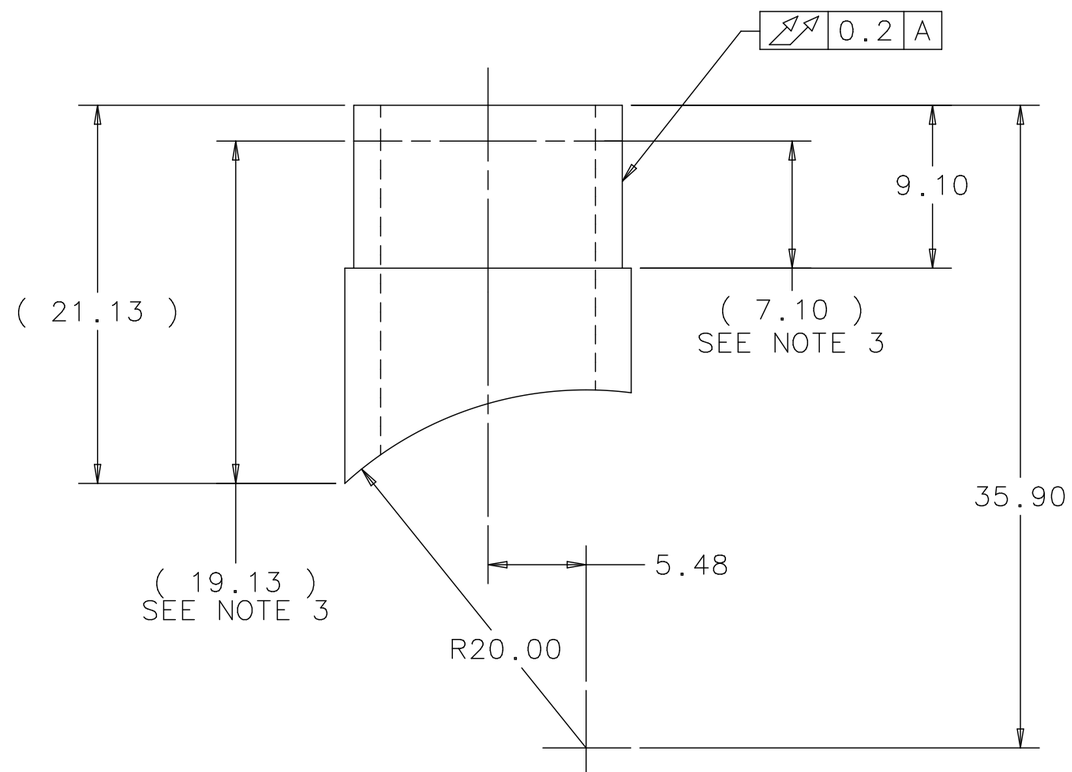

NOTES:

1) SURFACE IS TO BE FREE OF DAMAGE

2) DIMENSION COORESPONDS WITH PART NUMBER MD-439157. TOLERANCE IS TO BE COORDINATED BETWEEN MANUFACTURERS AND EB-WELDERS

3) FINAL LENGTH AFTER MACHINING OPERATION DETAILED ON DRAWING NUMBER MD-439174 AND MD-439175

UNLESS OTHERWISE SPECIFIED			ORIGINATOR	DESY	
.X	.XX	ANGLE	DRAWN	E.PIRTLE	18-APR-2005
± - -	± 0.02	± 1°	CHECKED	D.MITCHELL	16-SEP-2005
1. BREAK ALL SHARP EDGES 0.40 MAX. 2. DO NOT SCALE DRAWING. 3. DIMENSIONS BASED UPON ASME Y14.5M-1994 4. MAX. ALL MACH. SURFACES N7 5. DRAWING UNITS: METRIC, mm			APPROVED	M.FOLEY	20-SEP-2005
			USED ON	MD-439174 MD-439175	
			MATERIAL	RRR 300 NIOBIUM	

FERMI NATIONAL ACCELERATOR LABORATORY
UNITED STATES DEPARTMENT OF ENERGY

DESY 1.3GHZ TESLA RF CAVITY HOM SPOOL PIECE

SCALE	DRAWING NUMBER	SHEET	REV
3:1	4904.010-MB-439150	1 OF 1	

3RD

CREATED WITH : Ideas11NXSeries | GROUP: ACCELERATOR MECH. SUPPT.

THIS DESIGN IS THE INTELLECTUAL PROPERTY OF DESY ACCORDING TO DIN 34 / ISO 16016. THIS DRAWING HAS BEEN REDRAWN WITH DESY'S PERMISSION FOR FABRICATION PURPOSES WITHIN THE USA AND IS TO BE USED EXCLUSIVELY WITHIN FERMILAB. USAGE OUTSIDE OF FERMILAB MUST BE APPROVED BY DESY.

FOR REFERENCE ONLY
NOT FOR FABRICATION
MAY NOT BE CURRENT

REV	DESCRIPTION	DRAWN	DATE
		APPROVED	DATE
A	CHANGED MATERIAL FROM RRR 30 TO RRR 300	E.PIRTLE	27-OCT-2006
		M.FOLEY	27-OCT-2006

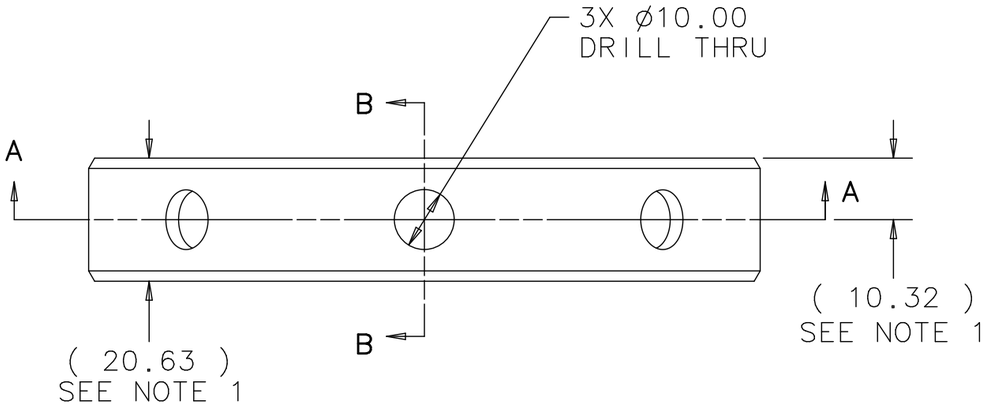

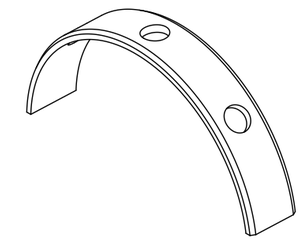

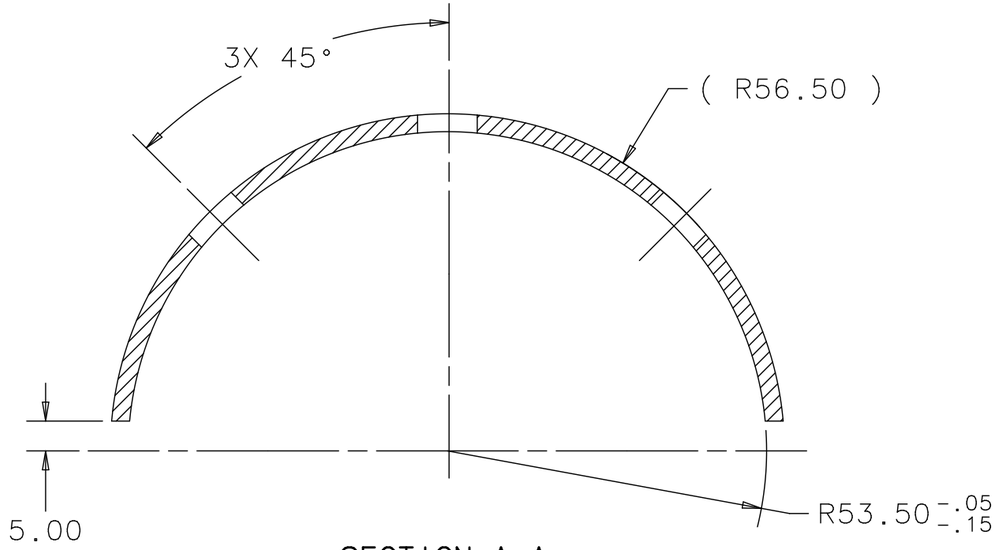

SECTION A-A

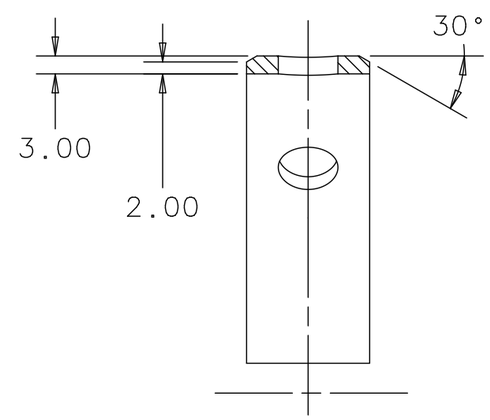

SECTION B-B

NOTE:

1) DIMENSIONS TO BE DETERMINED BY THE MANUFACTURER TO ALLOW FOR FUTURE EB-WELDING CONTRACTION.

UNLESS OTHERWISE SPECIFIED			ORIGINATOR	DESY	
.X	.XX	ANGLE	DRAWN	E.PIRTLE	18-APR-2005
± - -	± 0.08	± 1°	CHECKED	D.MITCHELL	16-SEP-2005
1. BREAK ALL SHARP EDGES 0.40 MAX.			APPROVED	M.FOLEY	16-SEP-2005
2. DO NOT SCALE DRAWING. 3. DIMENSIONS BASED UPON ASME Y14.5M-1994 4. MAX. ALL MACH. SURFACES N8			USED ON	MC-439172	
5. DRAWING UNITS: U.S. INCH			MATERIAL	RRR 300 NIOBIUM	

FERMI NATIONAL ACCELERATOR LABORATORY
UNITED STATES DEPARTMENT OF ENERGY

DESY 1.3GHZ TESLA RF CAVITY HALF SUPPORT RING

SCALE	DRAWING NUMBER	SHEET	REV
1:1	4904.010-MB-439151	1 OF 1	A

CREATED WITH : Ideas12NXSeries GROUP: ACCELERATOR MECH. SUPPT.

3RD

THIS DESIGN IS THE INTELLECTUAL PROPERTY OF DESY ACCORDING TO DIN 34 / ISO 16016. THIS DRAWING HAS BEEN REDRAWN WITH DESY'S PERMISSION FOR FABRICATION PURPOSES WITHIN THE USA AND IS TO BE USED EXCLUSIVELY WITHIN FERMILAB. USAGE OUTSIDE OF FERMILAB MUST BE APPROVED BY DESY.

FOR REFERENCE ONLY
NOT FOR FABRICATION
MAY NOT BE CURRENT

REV	DESCRIPTION	DRAWN	DATE
		APPROVED	DATE
A	ADDED MISSING DIMENSION	E.PIRTLE	04-APR-2006
		M.FOLEY	06-APR-2006
B	CHANGED MATERIAL FROM RRR 30 TO RRR 300	E.PIRTLE	26-OCT-2006
		M.FOLEY	26-OCT-2006

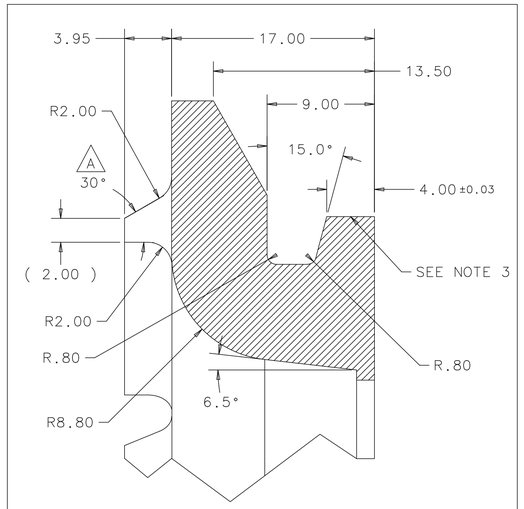

DETAIL A
SCALE 4:1

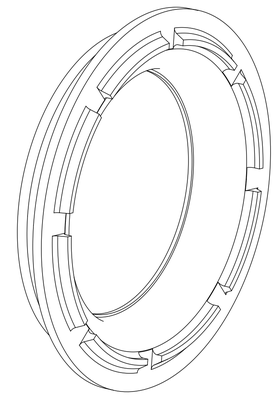

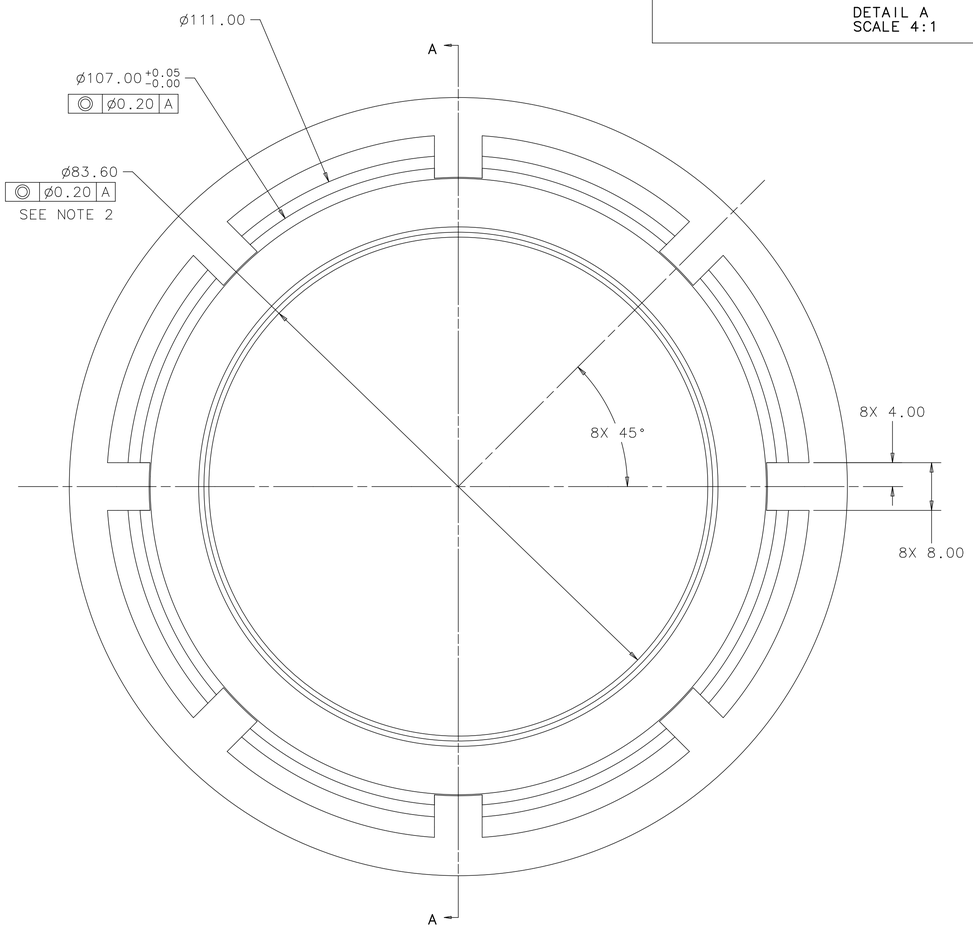

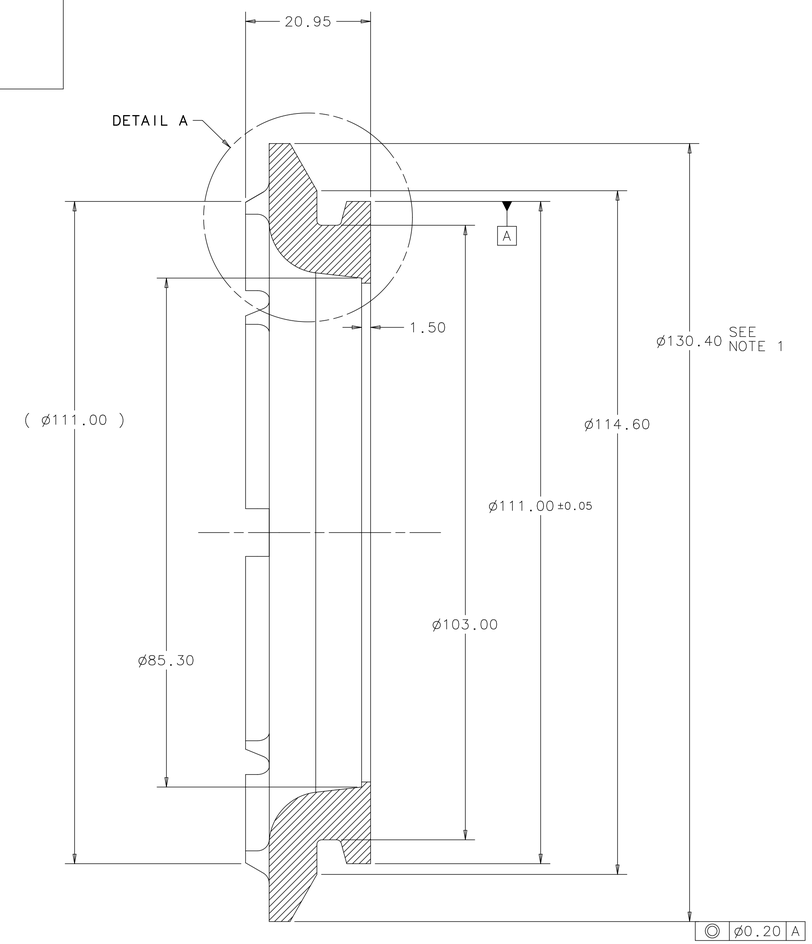

SECTION A-A

NOTE:
1) DIMENSION COORESPONDS WITH PART NUMBER MD-439168 (SHORT VERSION) OR PART NUMBER MD-439167 (LONG VERSION). TOLERANCE IS TO BE COORDINATED BETWEEN MANUFACTURERS AND EB-WELDERS

2) DIMENSION COORESPONDS WITH PART NUMBER MB-439164. TOLERANCE IS TO BE COORDINATED BETWEEN MANUFACTURERS AND EB-WELDERS

3) SURFACE CONTOUR TO BE MACHINED AFTER WELDING STEPS IN DRAWING NUMBER MD-439178

UNLESS OTHERWISE SPECIFIED			ORIGINATOR	DESY	
.X	.XX	ANGLE	DRAWN	E.PIRTLE	18-APR-2005
± - -	± 0.10	± 1°	CHECKED	D.MITCHELL	16-SEP-2005
1. BREAK ALL SHARP EDGES 0.40 MAX. 2. DO NOT SCALE DRAWING. 3. DIMENSIONS BASED UPON ASME Y14.5M-1994 4. MAX. ALL MACH. SURFACES N8 5. DRAWING UNITS: U.S. INCH			APPROVED	M.FOLEY	16-SEP-2005
			USED ON	MD-439178	
			MATERIAL	RRR 300 NIOBIUM	

FERMI NATIONAL ACCELERATOR LABORATORY
UNITED STATES DEPARTMENT OF ENERGY

DESY 1.3GHZ TESTA
RF CAVITY
END DISK FLANGE

SCALE	DRAWING NUMBER	SHEET	REV
2:1	4904.010-MD-439152	1 OF 1	B

CREATED WITH : Ideas12NXSeries | GROUP: ACCELERATOR MECH. SUPPT.

THIS DESIGN IS THE INTELLECTUAL PROPERTY OF DESY ACCORDING TO DIN 34 / ISO 16016. THIS DRAWING HAS BEEN REDRAWN WITH DESY'S PERMISSION FOR FABRICATION PURPOSES WITHIN THE USA AND IS TO BE USED EXCLUSIVELY WITHIN FERMILAB. USAGE OUTSIDE OF FERMILAB MUST BE APPROVED BY DESY.

FOR REFERENCE ONLY
NOT FOR FABRICATION
MAY NOT BE CURRENT

REV	DESCRIPTION	DRAWN	DATE
		APPROVED	DATE

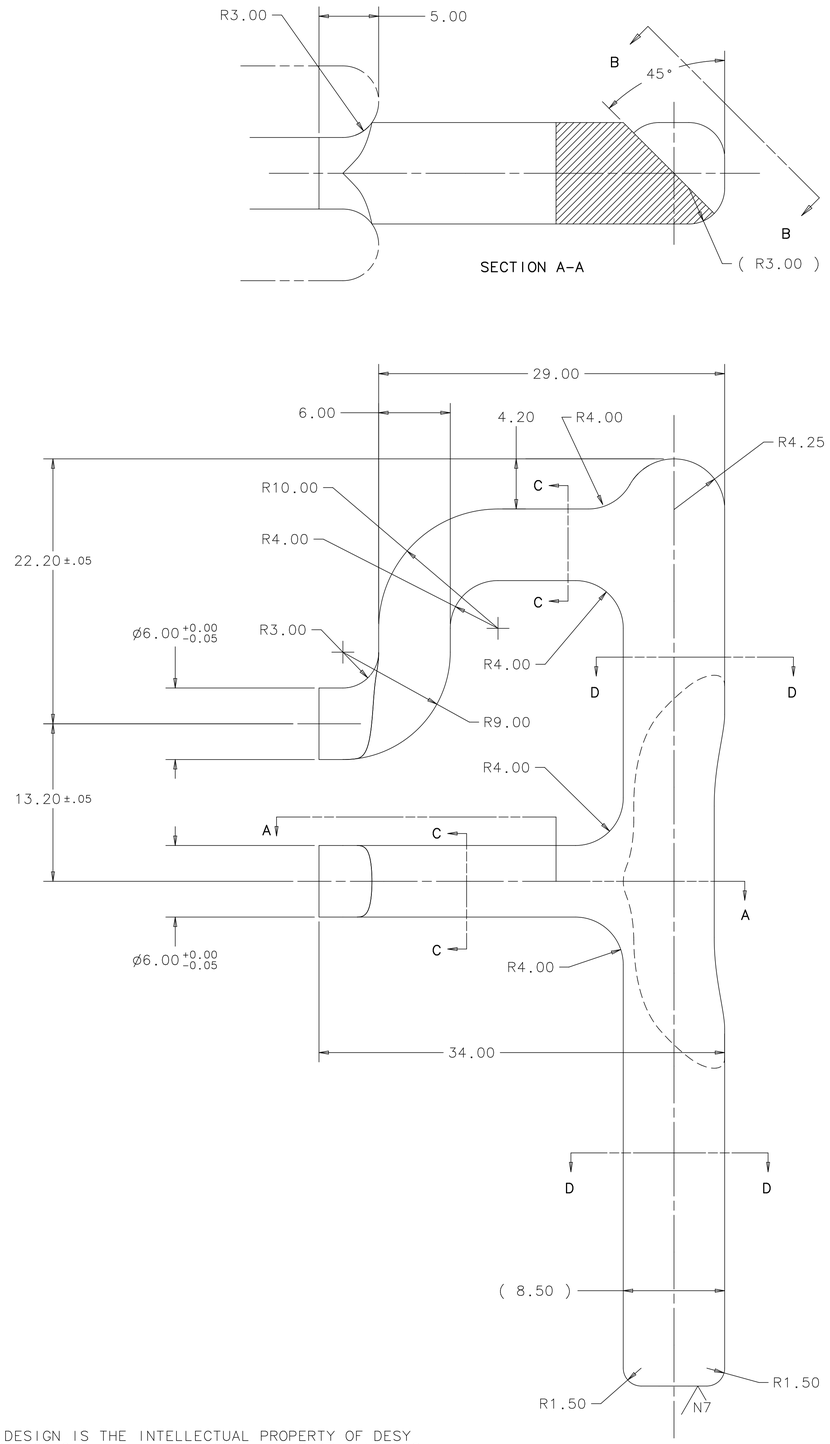

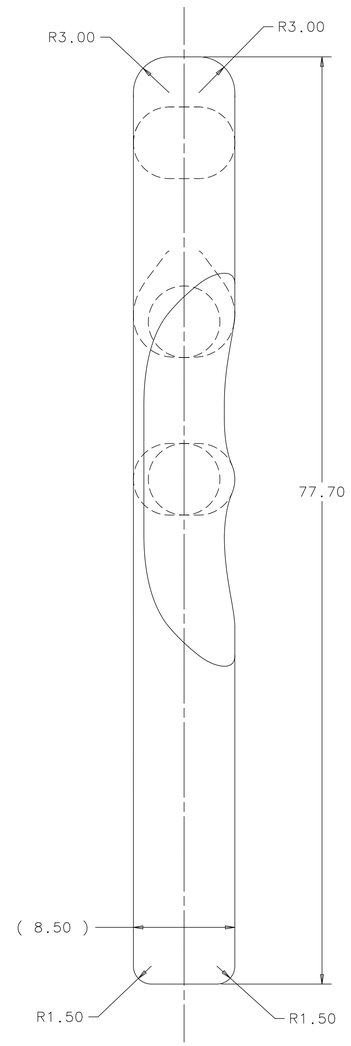

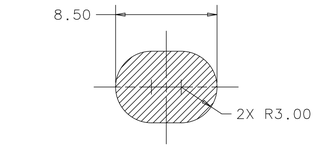

SECTION C-C
SCALE 4:1

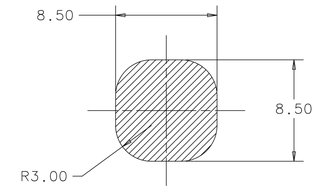

SECTION D-D
SCALE 4:1

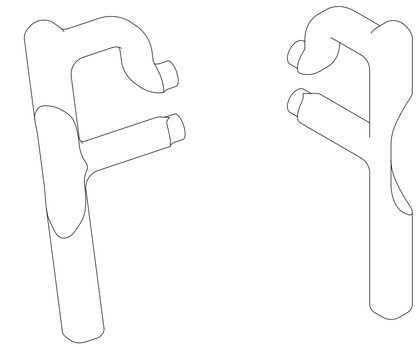

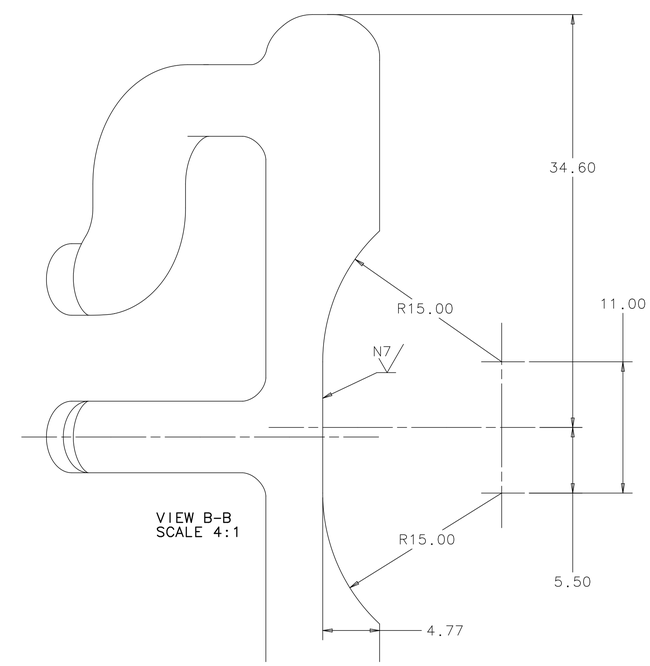

VIEW B-B
SCALE 4:1

UNLESS OTHERWISE SPECIFIED			ORIGINATOR	DESY	
.X	.XX	ANGLE	DRAWN	E.PIRTLE	18-APR-2005
± - -	± 0.10	±0.5°	CHECKED	D.MITCHELL	16-SEP-2005
			APPROVED	M.FOLEY	16-SEP-2005

1. BREAK ALL SHARP EDGES 0.40 MAX.
2. DO NOT SCALE DRAWING.
3. DIMENSIONS BASED UPON ASME Y14.5M-1994
4. MAX. ALL MACH. SURFACES N8
5. DRAWING UNITS: METRIC, mm

USED ON: MD-439174

MATERIAL: RRR 300 NIOBIUM

FERMI NATIONAL ACCELERATOR LABORATORY
UNITED STATES DEPARTMENT OF ENERGY

DESY 1.3GHZ TESLA RF CAVITY LONG END HOM FORMTEIL

SCALE	DRAWING NUMBER	SHEET	REV
4:1	4904.010-MD-439154	1 OF 1	

CREATED WITH : Ideas11NXSeries | GROUP: ACCELERATOR MECH. SUPPT.

THIS DESIGN IS THE INTELLECTUAL PROPERTY OF DESY ACCORDING TO DIN 34 / ISO 16016. THIS DRAWING HAS BEEN REDRAWN WITH DESY'S PERMISSION FOR FABRICATION PURPOSES WITHIN THE USA AND IS TO BE USED EXCLUSIVELY WITHIN FERMILAB. USAGE OUTSIDE OF FERMILAB MUST BE APPROVED BY DESY.

FOR REFERENCE ONLY
NOT FOR FABRICATION
MAY NOT BE CURRENT

REV	DESCRIPTION	DRAWN	DATE
		APPROVED	DATE

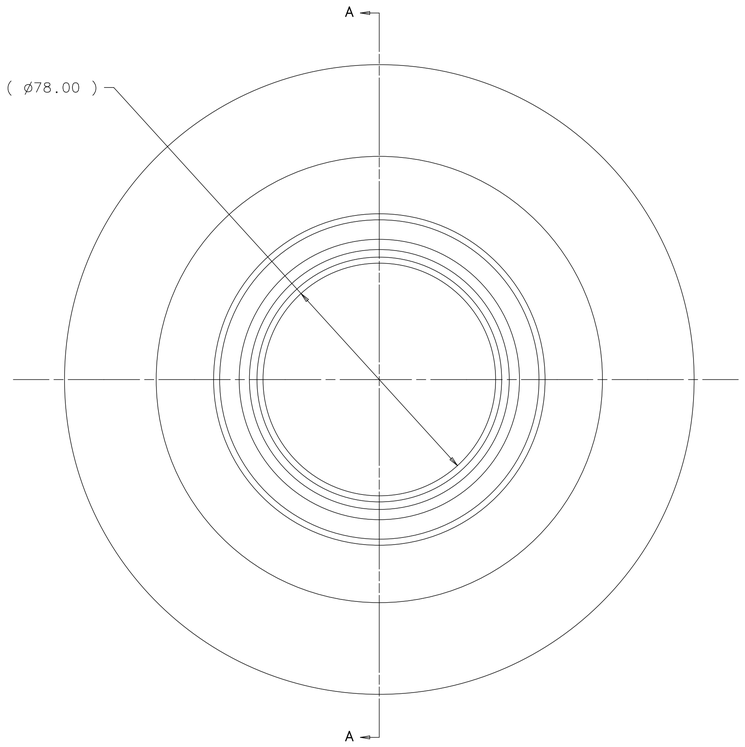

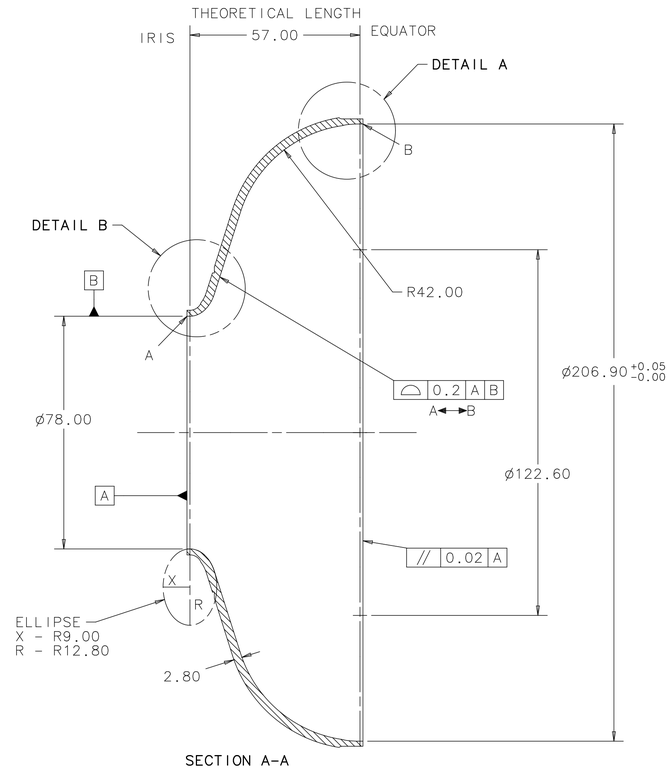

SECTION A-A

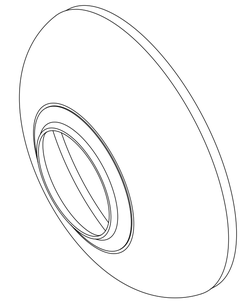

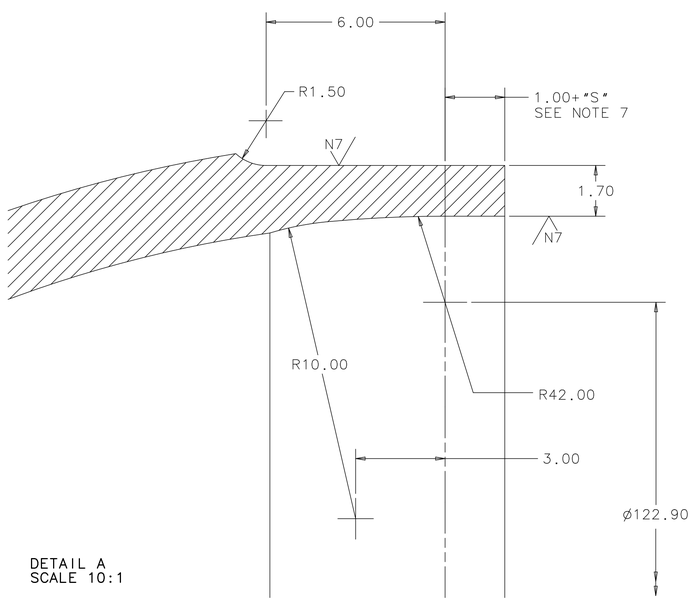

DETAIL A
SCALE 10:1

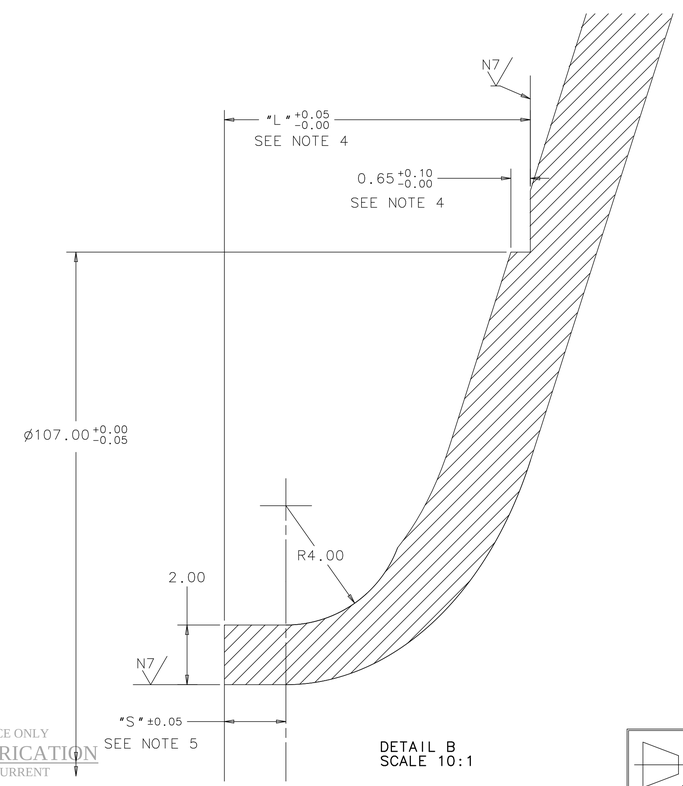

DETAIL B
SCALE 10:1

NOTES:

1) THE INTERNAL SURFACE MAY SHOW NO DAMAGE CAUSED BY FORMING
2) DIAMETER, FORM, AND POSITION TOLERANCES MEASURED IN HALF CELL'S STRAINED CONDITION
3) DO NOT BREAK EDGES ON END CELL
4) DIMENSION "L" DETERMINED BY THE MANUFACTURER SO THAT DIMENSION 0.65 IS KEPT
5) SUPPLEMENT FOR WELD SHRINKAGE TO BE DETERMINED BY EB-WELDERS
6) DUE TO THE MANUFACTURING PROCESS THE WALL THICKNESS BETWEEN IRIS AND EQUATOR IS NOT CONSTANT
7) ADDITIONAL MATERIAL NEEDED FOR CELL TUNING PLUS ALLOWANCE FOR E-BEAM WELD SHRINKAGE. FINAL SURFACE TO BE MACHINED UNTIL TUNED.

UNLESS OTHERWISE SPECIFIED			ORIGINATOR	DESY	
.X	.XX	ANGLE	DRAWN	E.PIRTLE	18-APR-2005
± - -	± 0.05	± 1°	CHECKED	D.MITCHELL	16-SEP-2005
1. BREAK ALL SHARP EDGES 0.40 MAX. 2. DO NOT SCALE DRAWING. 3. DIMENSIONS BASED UPON ASME Y14.5M-1994 4. MAX. ALL MACH. SURFACES N8 5. DRAWING UNITS: METRIC, mm			APPROVED	M.FOLEY	16-SEP-2005
			USED ON	MD-439178	
			MATERIAL	RRR 300 NIOBIUM	

FERMI NATIONAL ACCELERATOR LABORATORY
UNITED STATES DEPARTMENT OF ENERGY

DESY 1.3GHZ TESLA RF CAVITY LONG END HALF CELL

SCALE	DRAWING NUMBER	SHEET	REV
1:1	4904.010-MD-439155	1 OF 1	

CREATED WITH : Ideas11NXSeries | GROUP: ACCELERATOR MECH. SUPPT.

THIS DESIGN IS THE INTELLECTUAL PROPERTY OF DESY ACCORDING TO DIN 34 / ISO 16016. THIS DRAWING HAS BEEN REDRAWN WITH DESY'S PERMISSION FOR FABRICATION PURPOSES WITHIN THE USA AND IS TO BE USED EXCLUSIVELY WITHIN FERMILAB. USAGE OUTSIDE OF FERMILAB MUST BE APPROVED BY DESY.

FOR REFERENCE ONLY
NOT FOR FABRICATION
MAY NOT BE CURRENT

REV	DESCRIPTION	DRAWN	DATE
		APPROVED	DATE

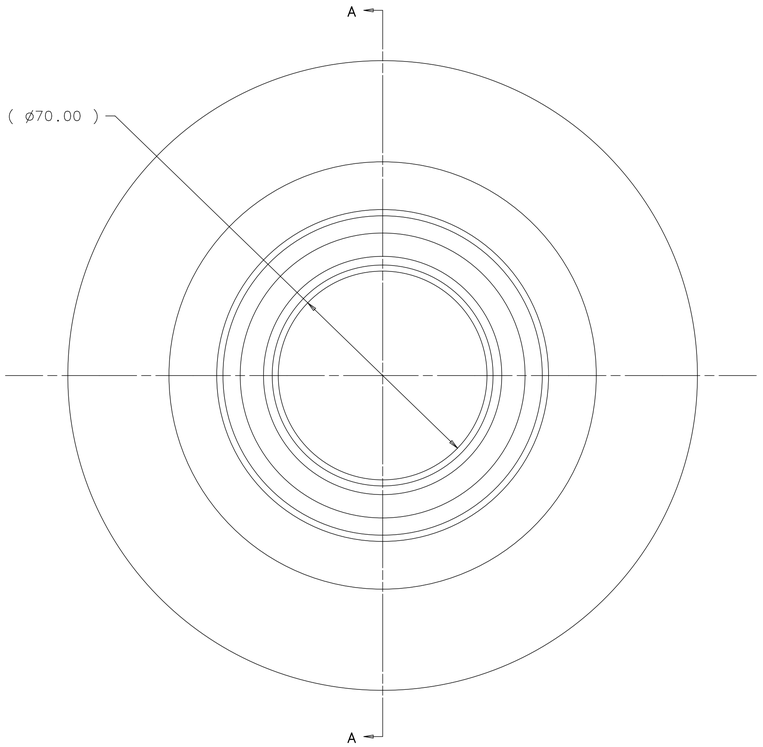

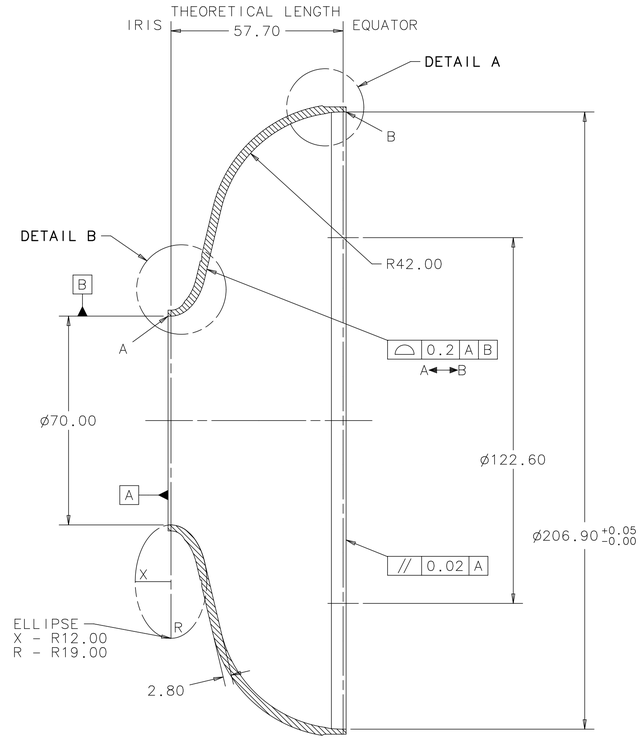

SECTION A-A

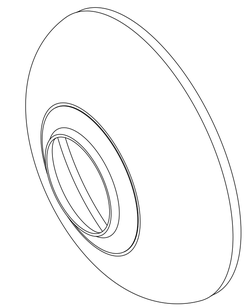

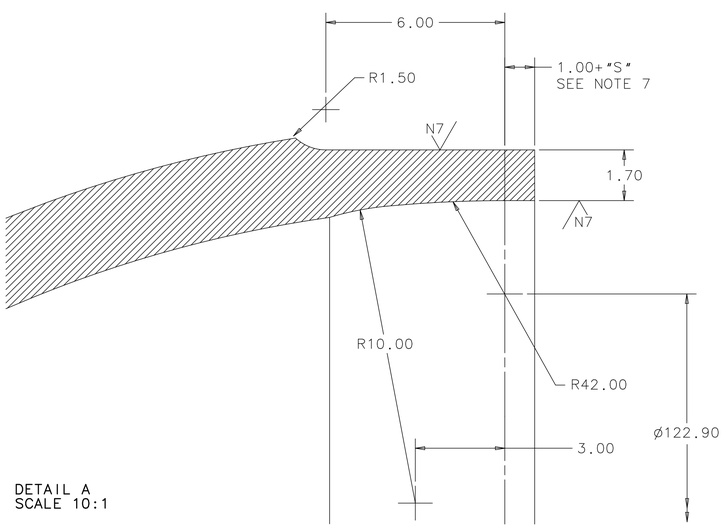

DETAIL A
SCALE 10:1

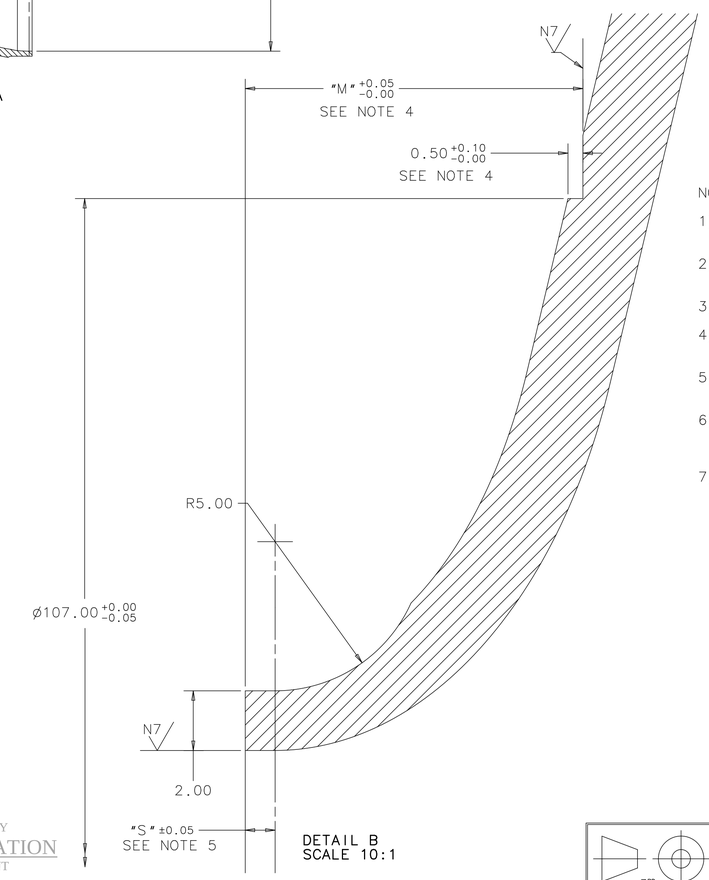

DETAIL B
SCALE 10:1

NOTES:

1) THE INTERNAL SURFACE MAY SHOW NO DAMAGE CAUSED BY FORMING
2) DIAMETER, FORM, AND POSITION TOLERANCES MEASURED IN HALF CELL'S STRAINED CONDITION
3) DO NOT BREAK EDGES ON END CELL
4) DIMENSION "M" DETERMINED BY THE MANUFACTURER SO THAT DIMENSION 0.50 IS KEPT
5) SUPPLEMENT FOR WELD SHRINKAGE TO BE DETERMINED BY EB-WELDERS
6) DUE TO THE MANUFACTURING PROCESS THE WALL THICKNESS BETWEEN IRIS AND EQUATOR IS NOT CONSTANT
7) ADDITIONAL MATERIAL NEEDED FOR CELL TUNING PLUS ALLOWANCE FOR E-BEAM WELD SHRINKAGE. FINAL SURFACE TO BE MACHINED UNTIL TUNED.

UNLESS OTHERWISE SPECIFIED			ORIGINATOR	DESY	
.X	.XX	ANGLE	DRAWN	E.PIRTLE	18-APR-2005
± - -	± 0.05	± 1°	CHECKED	D.MITCHELL	16-SEP-2005
1. BREAK ALL SHARP EDGES 0.40 MAX.			APPROVED	M.FOLEY	16-SEP-2005
2. DO NOT SCALE DRAWING.			USED ON	MC-439172	
3. DIMENSIONS BASED UPON ASME Y14.5M-1994					
4. MAX. ALL MACH. SURFACES N8			MATERIAL	RRR 300 NIOBIUM	
5. DRAWING UNITS: METRIC, mm					

FERMI NATIONAL ACCELERATOR LABORATORY
UNITED STATES DEPARTMENT OF ENERGY

DESY 1.3GHZ TESTLA
RF CAVITY
MID HALF CELL

SCALE	DRAWING NUMBER	SHEET	REV
1:1	4904.010-MD-439156	1 OF 1	

CREATED WITH : Ideas11NXSeries GROUP: ACCELERATOR MECH. SUPPT.

THIS DESIGN IS THE INTELLECTUAL PROPERTY OF DESY ACCORDING TO DIN 34 / ISO 16016. THIS DRAWING HAS BEEN REDRAWN WITH DESY'S PERMISSION FOR FABRICATION PURPOSES WITHIN THE USA AND IS TO BE USED EXCLUSIVELY WITHIN FERMILAB. USAGE OUTSIDE OF FERMILAB MUST BE APPROVED BY DESY.

FOR REFERENCE ONLY
NOT FOR FABRICATION
MAY NOT BE CURRENT

REV	DESCRIPTION	DRAWN	DATE
		APPROVED	DATE

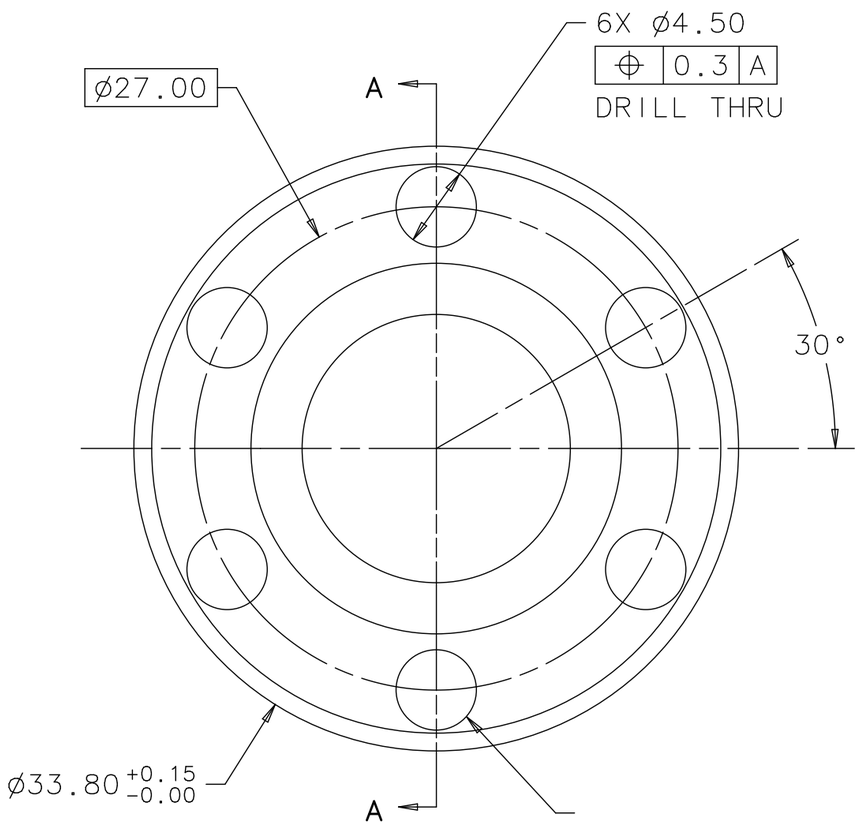

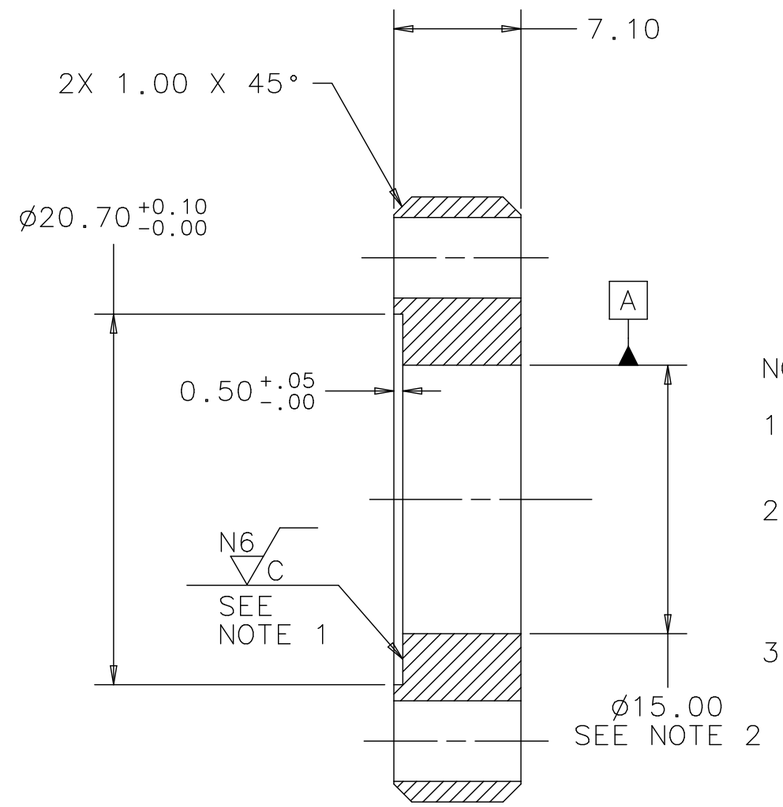

SECTION A-A

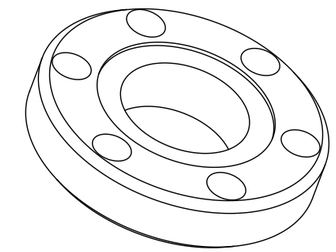

NOTE:

1) SEALING SURFACE MUST BE FREE OF SCRATCHES WITH NO RADIAL SCORING

2) DIMENSION COORESPONDS WITH PART NUMBER MB-439150. TOLERANCE IS TO BE COORDINATED BETWEEN MANUFACTURERS AND EB-WELDERS

3) USE PRIMARY MILLIMETER DIMENSIONS TO MAKE PART. [INCHES] SHOWN FOR REFERENCE

UNLESS OTHERWISE SPECIFIED			ORIGINATOR	DESY	
.X	.XX	ANGLE	DRAWN	E.PIRTLE	18-APR-2005
± - -	± 0.20	± 1°	CHECKED	D.MITCHELL	16-SEP-2005
1. BREAK ALL SHARP EDGES 0.40 MAX.			APPROVED	M.FOLEY	16-SEP-2005
2. DO NOT SCALE DRAWING. 3. DIMENSIONS BASED UPON ASME Y14.5M-1994 4. MAX. ALL MACH. SURFACES N7 5. DRAWING UNITS: METRIC			USED ON	MD-439179	
			MATERIAL	NIOBIUM-TITANIUM 55%	

FERMI NATIONAL ACCELERATOR LABORATORY
UNITED STATES DEPARTMENT OF ENERGY

DESY 1.3GHZ TESLA
RF CAVITY
NW 12 FLANGE

SCALE	DRAWING NUMBER	SHEET	REV
3:1	4904.010-MB-439157	1 OF 1	

3RD

CREATED WITH : Ideas11NXSeries | GROUP: ACCELERATOR MECH. SUPPT.

THIS DESIGN IS THE INTELLECTUAL PROPERTY OF DESY ACCORDING TO DIN 34 / ISO 16016. THIS DRAWING HAS BEEN REDRAWN WITH DESY'S PERMISSION FOR FABRICATION PURPOSES WITHIN THE USA AND IS TO BE USED EXCLUSIVELY WITHIN FERMILAB. USAGE OUTSIDE OF FERMILAB MUST BE APPROVED BY DESY.

FOR REFERENCE ONLY
NOT FOR FABRICATION
MAY NOT BE CURRENT

REV	DESCRIPTION	DRAWN	DATE
		APPROVED	DATE

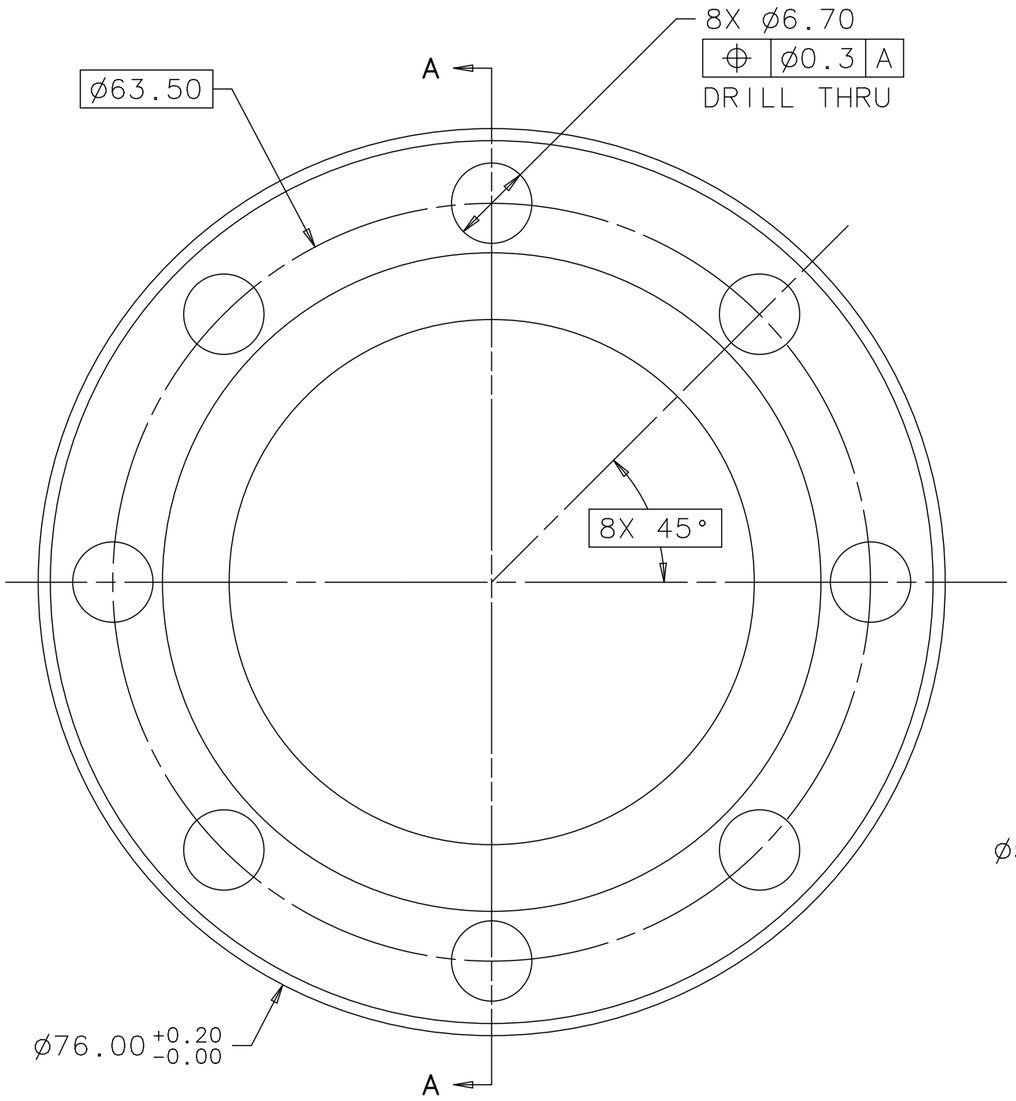

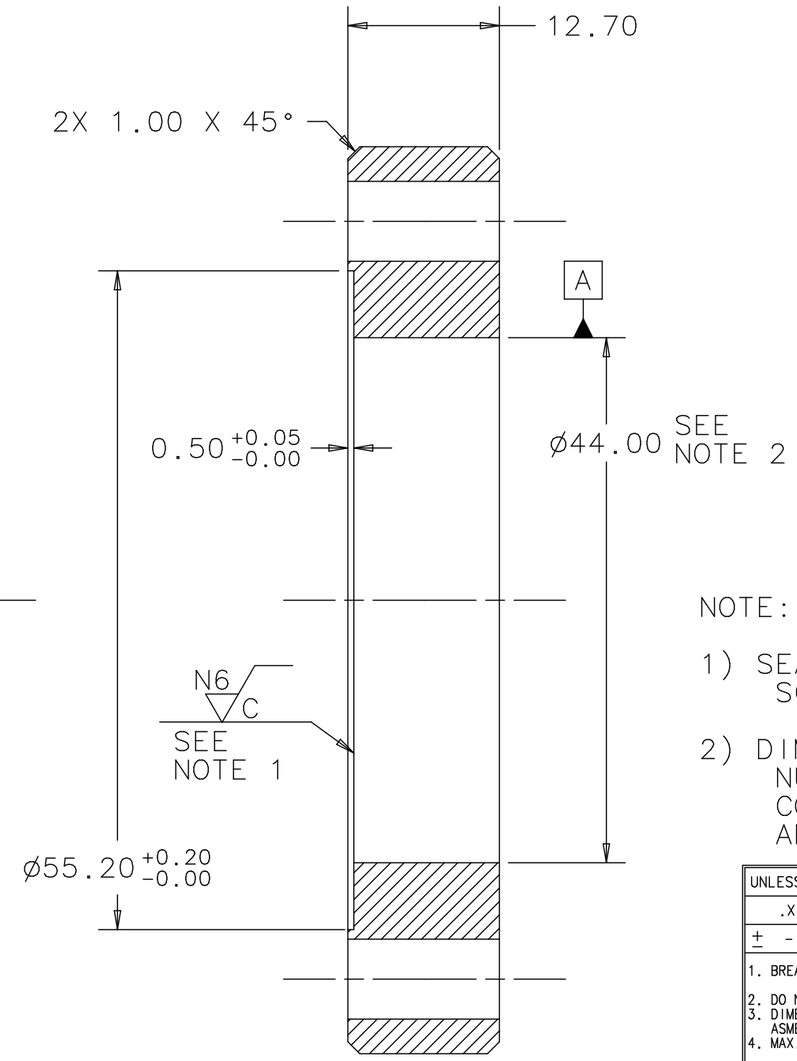

SECTION A-A

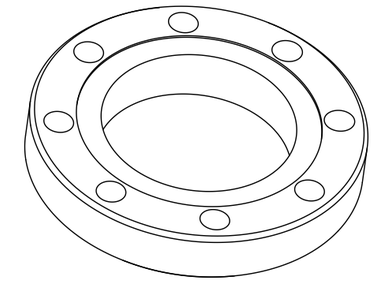

NOTE:

1) SEALING SURFACE MUST BE FREE OF SCRATCHES WITH NO RADIAL SCORING

2) DIMENSION COORESPONDS WITH PART NUMBER MB-439171. TOLERANCE IS TO BE COORDINATED BETWEEN MANUFACTURERS AND EB-WELDERS

UNLESS OTHERWISE SPECIFIED			ORIGINATOR	DESY	
.X	.XX	ANGLE	DRAWN	E.PIRTLE	18-APR-2005
± - -	± 0.20	± 1°	CHECKED	D.MITCHELL	16-SEP-2005
1. BREAK ALL SHARP EDGES 0.40 MAX. 2. DO NOT SCALE DRAWING. 3. DIMENSIONS BASED UPON ASME Y14.5M-1994 4. MAX. ALL MACH. SURFACES N7 5. DRAWING UNITS: METRIC, mm			APPROVED	M.FOLEY	16-SEP-2005
			USED ON	MD-439180	
			MATERIAL	NIOBIUM-TITANIUM 55%	

FERMI NATIONAL ACCELERATOR LABORATORY
UNITED STATES DEPARTMENT OF ENERGY

DESY 1.3GHZ TESLA
RF CAVITY
NW 40 FLANGE

SCALE	DRAWING NUMBER	SHEET	REV
2:1	4904.010-MB-439158	1 OF 1	

3RD

CREATED WITH : Ideas11NXSeries | GROUP: ACCELERATOR MECH. SUPPT.

THIS DESIGN IS THE INTELLECTUAL PROPERTY OF DESY ACCORDING TO DIN 34 / ISO 16016. THIS DRAWING HAS BEEN REDRAWN WITH DESY'S PERMISSION FOR FABRICATION PURPOSES WITHIN THE USA AND IS TO BE USED EXCLUSIVELY WITHIN FERMILAB. USAGE OUTSIDE OF FERMILAB MUST BE APPROVED BY DESY.

FOR REFERENCE ONLY
NOT FOR FABRICATION
MAY NOT BE CURRENT

REV	DESCRIPTION	DRAWN	DATE
		APPROVED	DATE

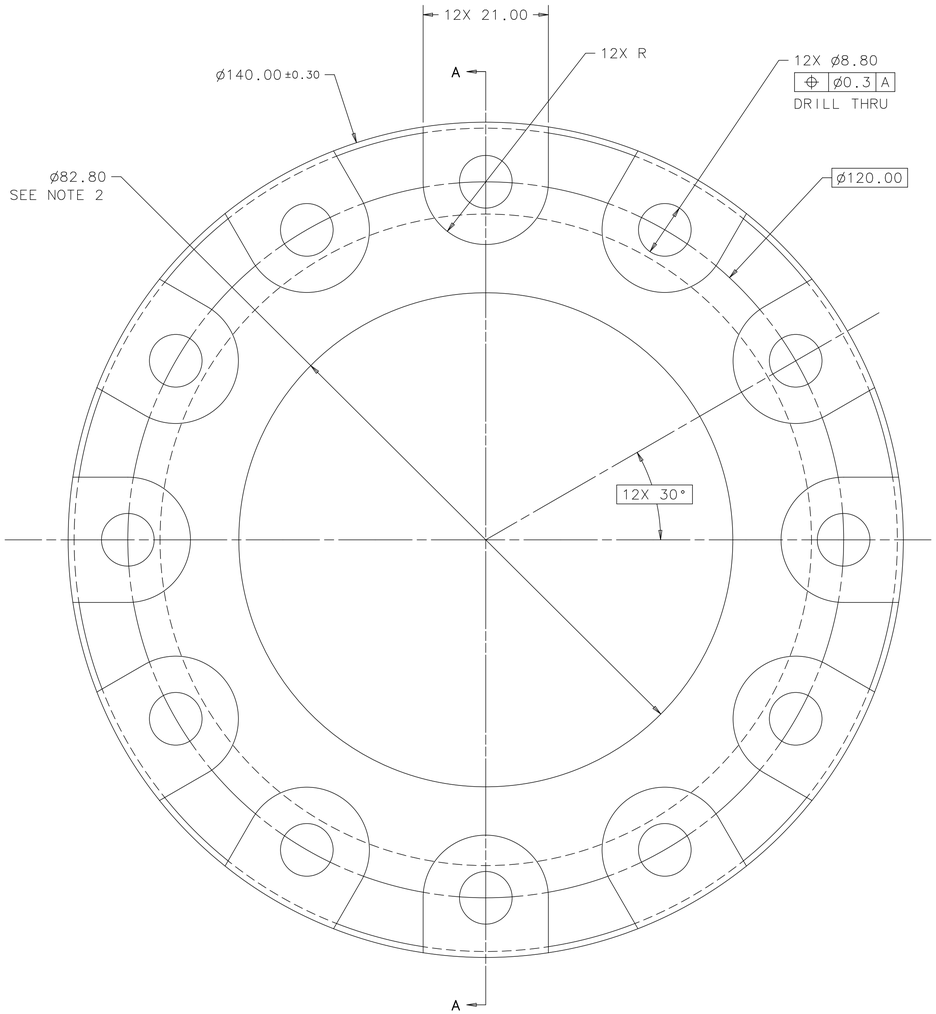

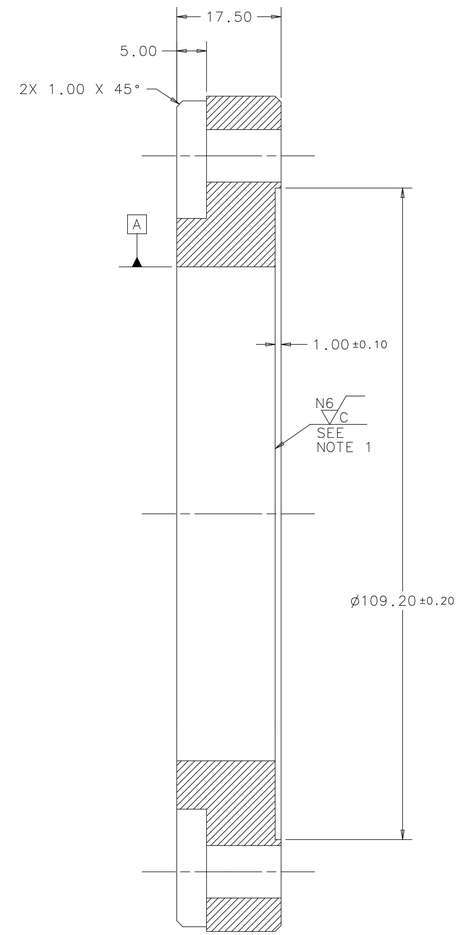

SECTION A-A

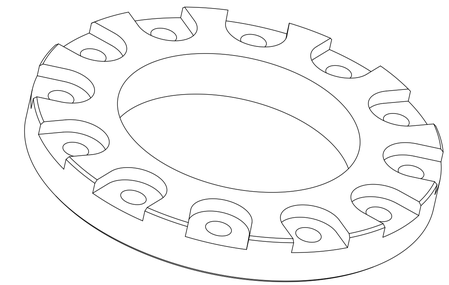

NOTE:

1) SEALING SURFACE MUST BE FREE OF SCRATCHES WITH NO RADIAL SCORING

2) DIMENSION COORESPONDS WITH PART NUMBER MD-439153 AND MD-439161. TOLERANCE IS TO BE COORDINATED BETWEEN MANUFACTURERS AND EB-WELDERS

UNLESS OTHERWISE SPECIFIED			ORIGINATOR	DESY	
.X	.XX	ANGLE	DRAWN	E.PIRTLE	18-APR-2005
± - -	± 0.30	± 1°	CHECKED	D.MITCHELL	16-SEP-2005
1. BREAK ALL SHARP EDGES 0.40 MAX. 2. DO NOT SCALE DRAWING. 3. DIMENSIONS BASED UPON ASME Y14.5M-1994 4. MAX. ALL MACH. SURFACES N7 5. DRAWING UNITS: METRIC, mm			APPROVED	M.FOLEY	20-SEP-2005
			USED ON	MD-439179 MD-439180	
			MATERIAL	NIOBIUM-TITANIUM 55%	

FERMI NATIONAL ACCELERATOR LABORATORY
UNITED STATES DEPARTMENT OF ENERGY

DESY 1.3GHZ TESLA RF CAVITY NW 78 END TUBE FLANGE

SCALE	DRAWING NUMBER	SHEET	REV
2:1	4904.010-MD-439159	1 OF 1	

CREATED WITH : Ideas11NXSeries GROUP: ACCELERATOR MECH. SUPPT.

THIS DESIGN IS THE INTELLECTUAL PROPERTY OF DESY ACCORDING TO DIN 34 / ISO 16016. THIS DRAWING HAS BEEN REDRAWN WITH DESY'S PERMISSION FOR FABRICATION PURPOSES WITHIN THE USA AND IS TO BE USED EXCLUSIVELY WITHIN FERMILAB. USAGE OUTSIDE OF FERMILAB MUST BE APPROVED BY DESY.

FOR REFERENCE ONLY
NOT FOR FABRICATION
MAY NOT BE CURRENT

REV	DESCRIPTION	DRAWN	DATE
		APPROVED	DATE

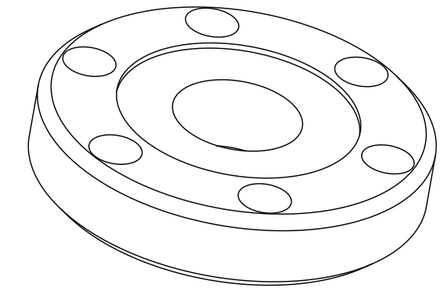

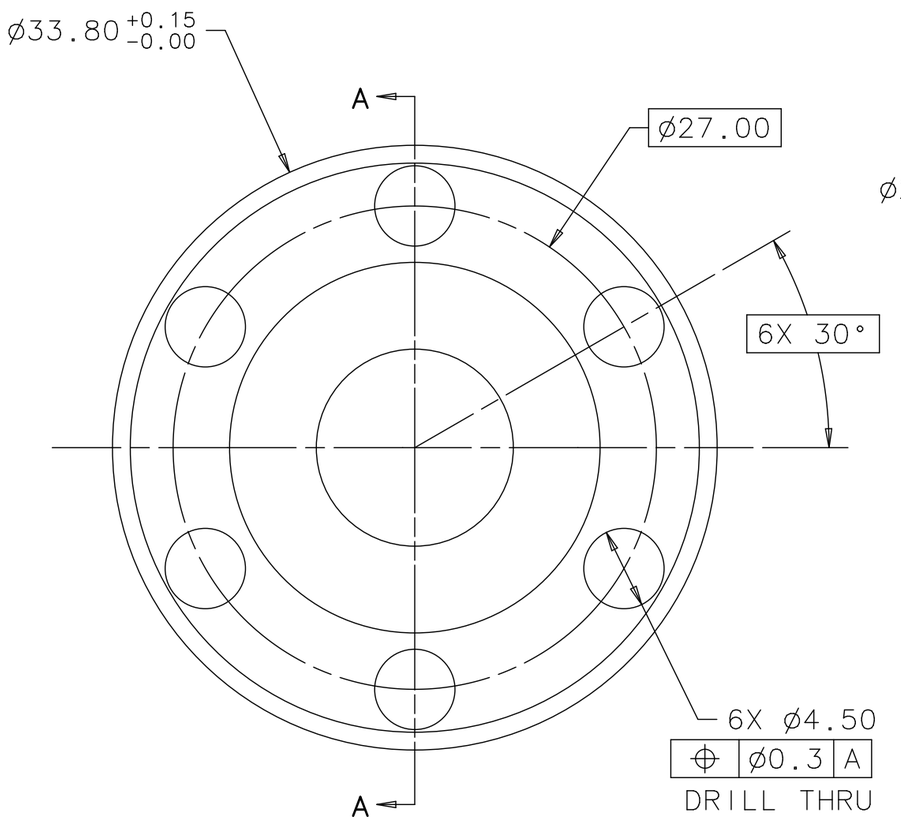

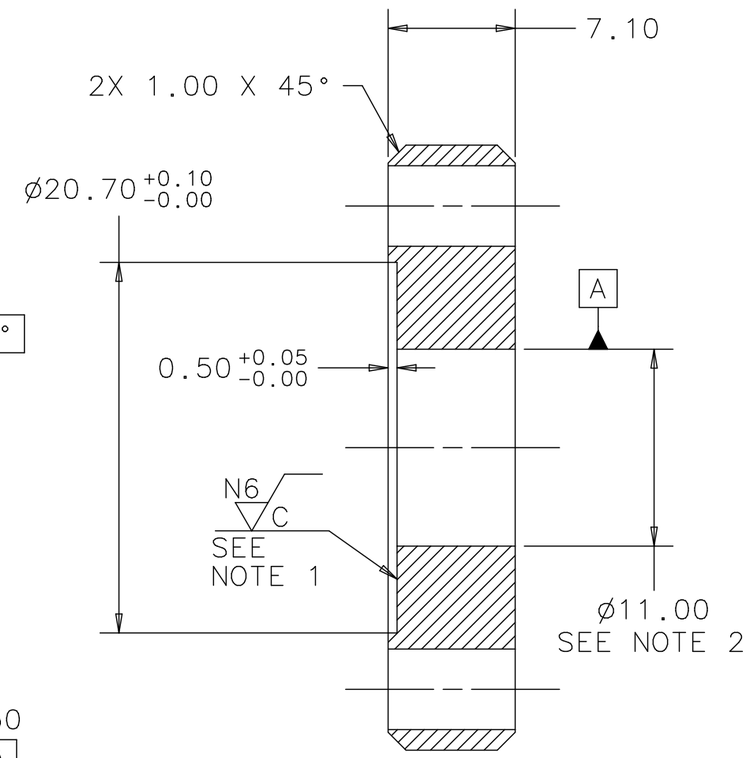

SECTION A-A

NOTE:

1) SEALING SURFACE MUST BE FREE OF SCRATCHES WITH NO RADIAL SCORING

2) DIMENSION COORESPONDS WITH PART NUMBER MB-439170. TOLERANCE IS TO BE COORDINATED BETWEEN MANUFACTURERS AND EB-WELDERS

UNLESS OTHERWISE SPECIFIED			ORIGINATOR	DESY	
.X	.XX	ANGLE	DRAWN	E.PIRTLE	18-APR-2005
± - -	± 0.20	± 1°	CHECKED	D.MITCHELL	16-SEP-2005
			APPROVED	M.FOLEY	16-SEP-2005

1. BREAK ALL SHARP EDGES 0.40 MAX.
2. DO NOT SCALE DRAWING.
3. DIMENSIONS BASED UPON ASME Y14.5M-1994
4. MAX. ALL MACH. SURFACES N7
5. DRAWING UNITS: METRIC, mm

USED ON: MD-439179

MATERIAL: NIOBIUM-TITANIUM 55%

FERMI NATIONAL ACCELERATOR LABORATORY
UNITED STATES DEPARTMENT OF ENERGY

DESY 1.3GHZ TESLA RF CAVITY NW 8 FLANGE

SCALE	DRAWING NUMBER	SHEET	REV
3:1	4904.010-MB-439160	1 OF 1	

3RD

CREATED WITH : Ideas11NXSeries | GROUP: ACCELERATOR MECH. SUPPT.

THIS DESIGN IS THE INTELLECTUAL PROPERTY OF DESY ACCORDING TO DIN 34 / ISO 16016. THIS DRAWING HAS BEEN REDRAWN WITH DESY'S PERMISSION FOR FABRICATION PURPOSES WITHIN THE USA AND IS TO BE USED EXCLUSIVELY WITHIN FERMILAB. USAGE OUTSIDE OF FERMILAB MUST BE APPROVED BY DESY.

FOR REFERENCE ONLY
NOT FOR FABRICATION
MAY NOT BE CURRENT

REV	DESCRIPTION	DRAWN	DATE
		APPROVED	DATE

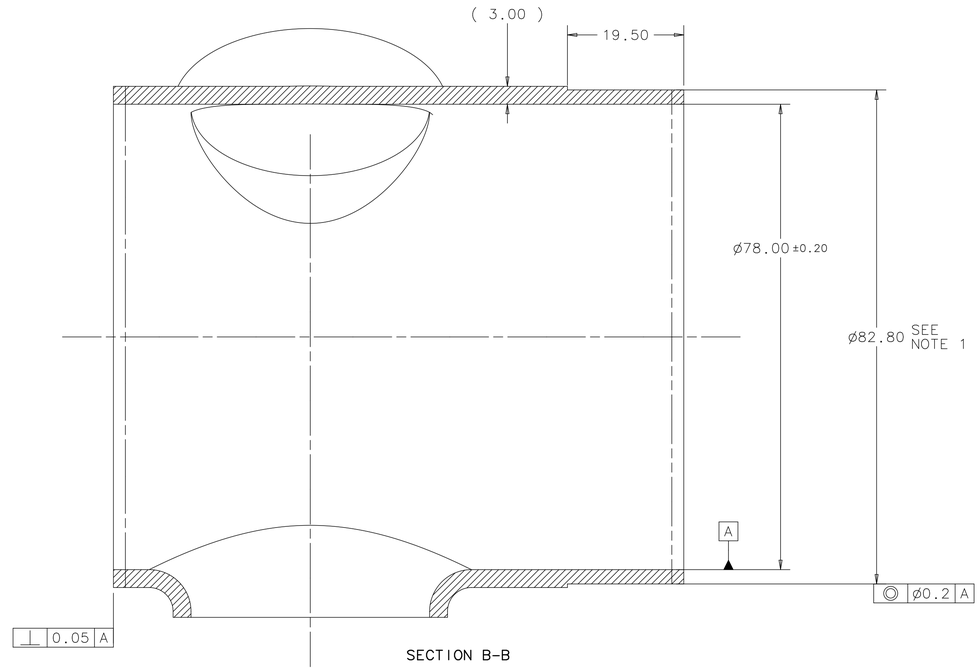

SECTION B-B

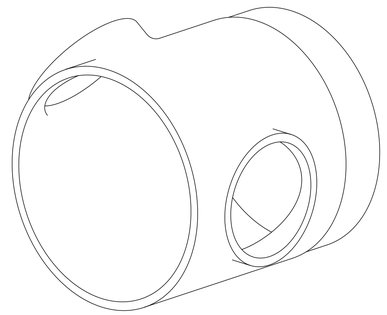

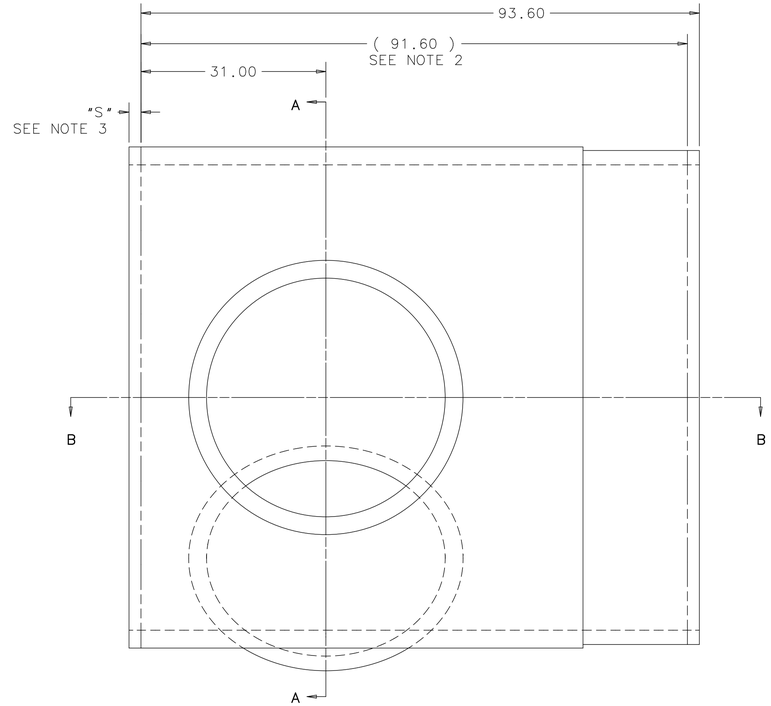

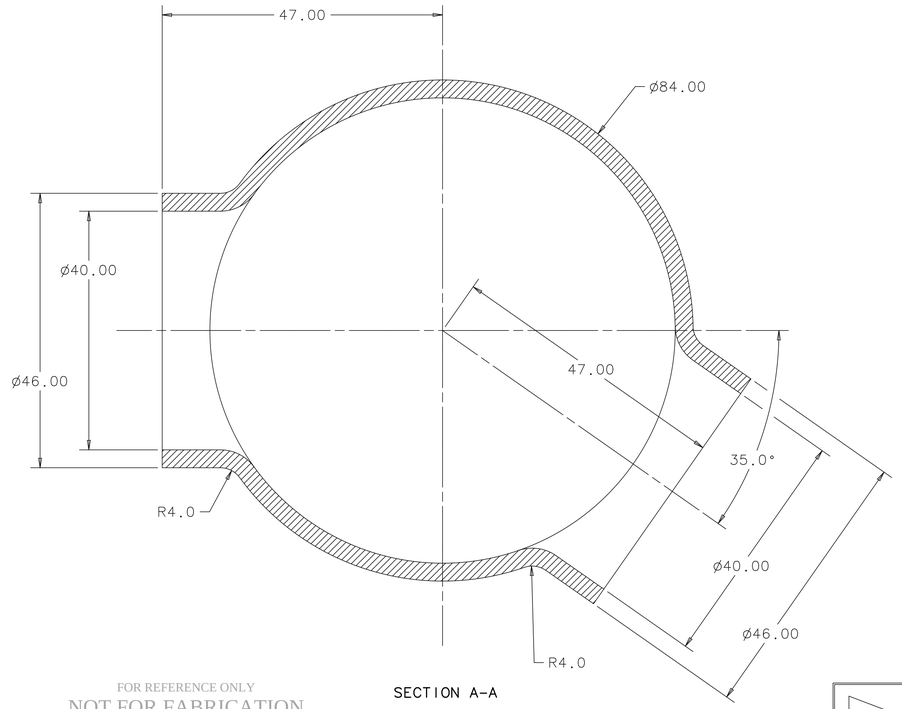

SECTION A-A

NOTES:

1) DIMENSION COORESPONDS WITH PART NUMBER MD-439159. TOLERANCE IS TO BE COORDINATED BETWEEN MANUFACTURERS AND EB-WELDERS

2) FINAL LENGTH AFTER MACHINING OPERATION DETAILED IN FUTURE STEP

3) SUPPLEMENT FOR WELD SHRINKAGE TO BE DETERMINED BY EB-WELDERS

UNLESS OTHERWISE SPECIFIED			ORIGINATOR	DESY	
.X	.XX	ANGLE	DRAWN	E.PIRTLE	18-APR-2005
± 0.2	± 0.10	±0.5°	CHECKED	D.MITCHELL	16-SEP-2005
1. BREAK ALL SHARP EDGES 0.40 MAX. 2. DO NOT SCALE DRAWING. 3. DIMENSIONS BASED UPON ASME Y14.5M-1994 4. MAX. ALL MACH. SURFACES N7 5. DRAWING UNITS: METRIC, mm			APPROVED	M.FOLEY	16-SEP-2005
			USED ON	MD-439177	
			MATERIAL	RRR 300 NIOBIUM	

FERMI NATIONAL ACCELERATOR LABORATORY
UNITED STATES DEPARTMENT OF ENERGY

DESY 1.3GHZ TESLA
RF CAVITY
SHORT END TUBE

SCALE	DRAWING NUMBER	SHEET	REV
2:1	4904.010-MD-439161	1 OF 1	

CREATED WITH : Ideas11NXSeries GROUP: ACCELERATOR MECH. SUPPT.

3RD

THIS DESIGN IS THE INTELLECTUAL PROPERTY OF DESY ACCORDING TO DIN 34 / ISO 16016. THIS DRAWING HAS BEEN REDRAWN WITH DESY'S PERMISSION FOR FABRICATION PURPOSES WITHIN THE USA AND IS TO BE USED EXCLUSIVELY WITHIN FERMILAB. USAGE OUTSIDE OF FERMILAB MUST BE APPROVED BY DESY.

FOR REFERENCE ONLY
NOT FOR FABRICATION
MAY NOT BE CURRENT

REV	DESCRIPTION	DRAWN	DATE
		APPROVED	DATE

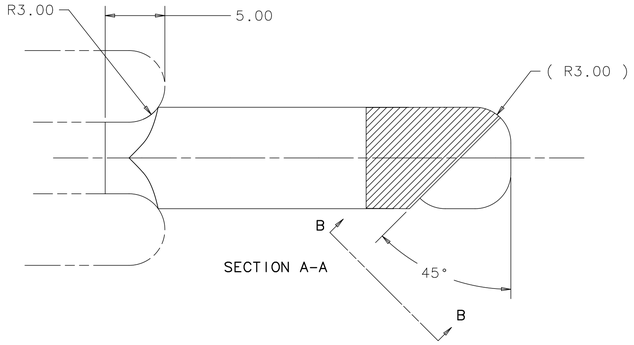

SECTION A-A

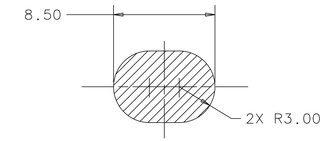

SECTION C-C
SCALE 4:1

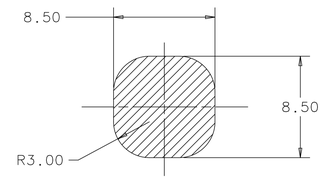

SECTION D-D
SCALE 4:1

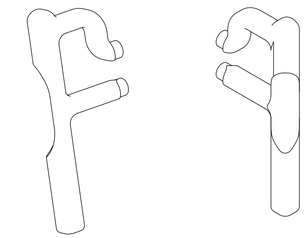

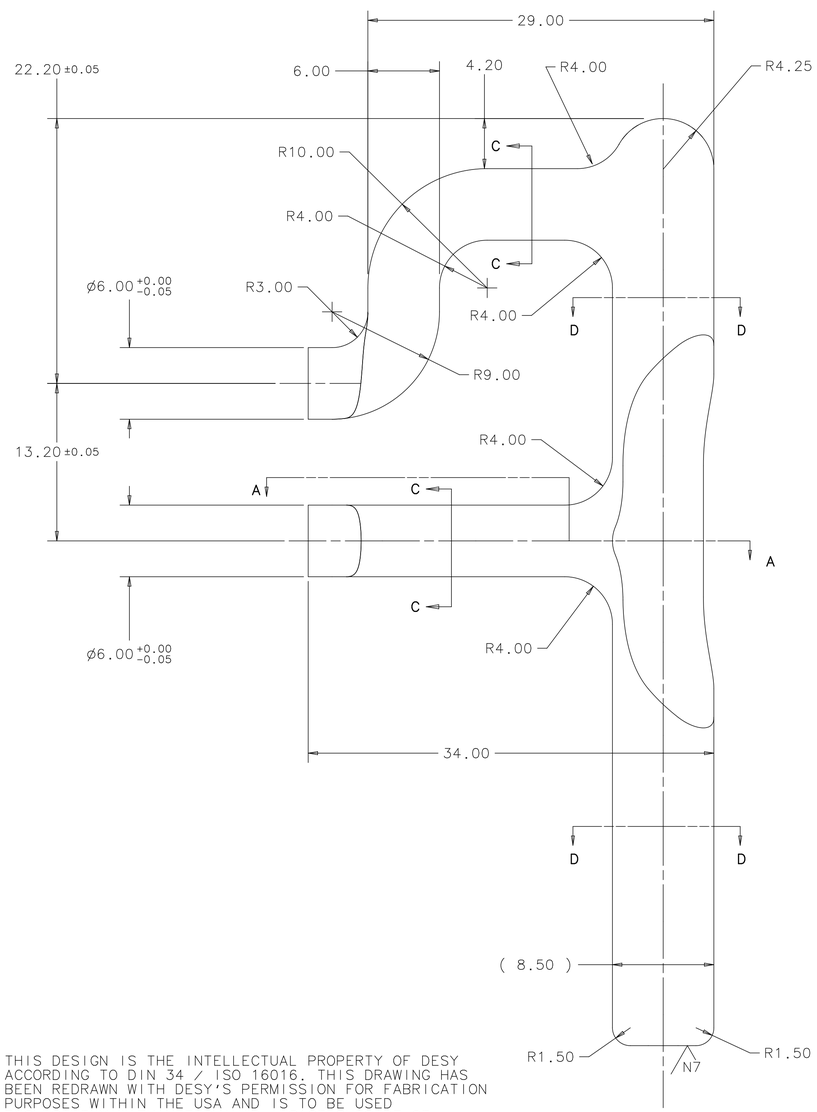

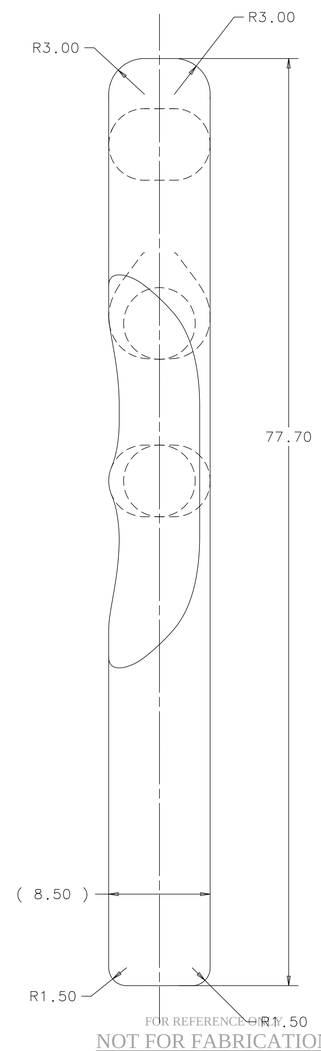

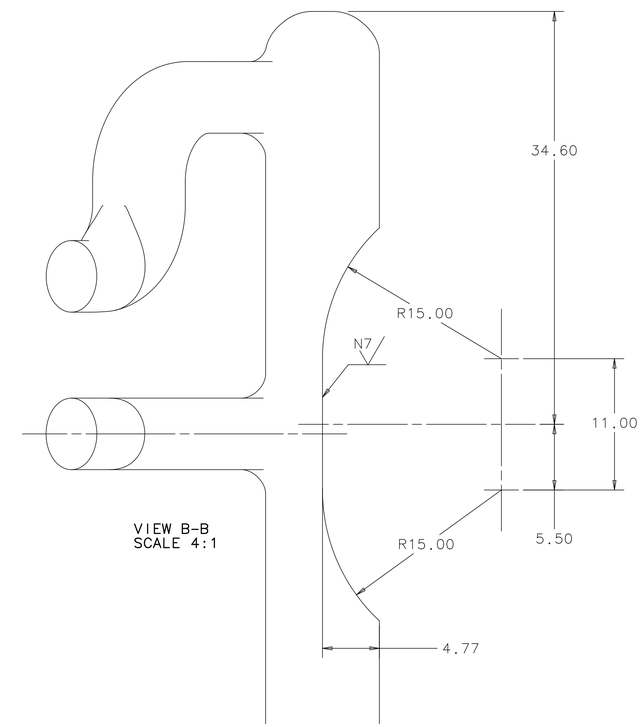

VIEW B-B
SCALE 4:1

THIS DESIGN IS THE INTELLECTUAL PROPERTY OF DESY ACCORDING TO DIN 34 / ISO 16016. THIS DRAWING HAS BEEN REDRAWN WITH DESY'S PERMISSION FOR FABRICATION PURPOSES WITHIN THE USA AND IS TO BE USED EXCLUSIVELY WITHIN FERMILAB. USAGE OUTSIDE OF FERMILAB MUST BE APPROVED BY DESY.

FOR REFERENCE ONLY
NOT FOR FABRICATION
MAY NOT BE CURRENT

UNLESS OTHERWISE SPECIFIED			ORIGINATOR	DESY	
.X	.XX	ANGLE	DRAWN	E.PIRTLE	18-APR-2005
± - -	± 0.10	±0.5°	CHECKED	D.MITCHELL	16-SEP-2005
			APPROVED	M.FOLEY	16-SEP-2005

1. BREAK ALL SHARP EDGES 0.40 MAX.
2. DO NOT SCALE DRAWING.
3. DIMENSIONS BASED UPON ASME Y14.5M-1994
4. MAX. ALL MACH. SURFACES N8
5. DRAWING UNITS: METRIC, mm

USED ON: MD-439175

MATERIAL: RRR 300 NIOBIUM

FERMI NATIONAL ACCELERATOR LABORATORY
UNITED STATES DEPARTMENT OF ENERGY

DESY 1.3GHZ TESLA RF CAVITY SHORT END HOM FORMTEIL

SCALE	DRAWING NUMBER	SHEET	REV
4:1	4904.010-MD-439162	1 OF 1	

CREATED WITH : Ideas11NXSeries | GROUP: ACCELERATOR MECH. SUPPT.

Created: 09:57:13 on 09-05-07 (D-M-Y) By: dmitchel State: 3-RELEASED

REV	DESCRIPTION	DRAWN	DATE
		APPROVED	DATE

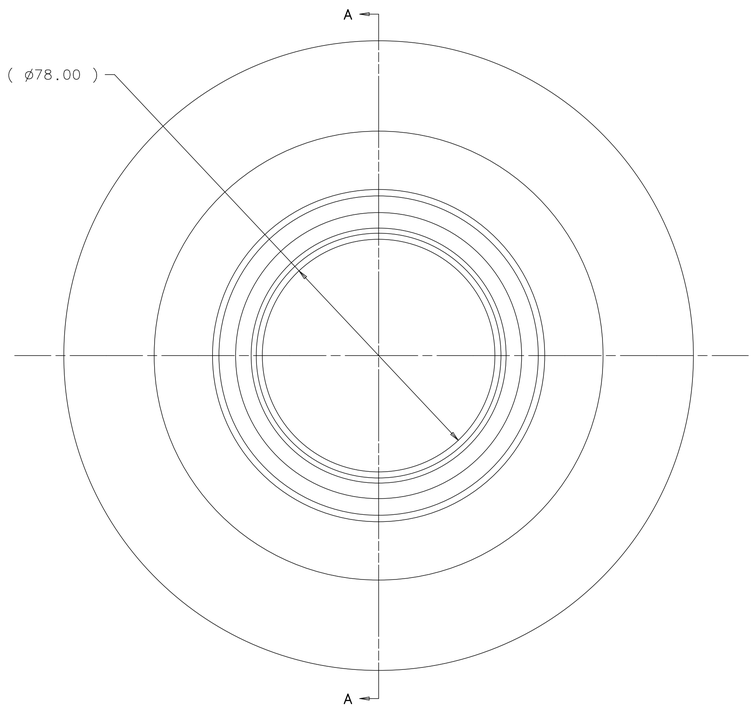

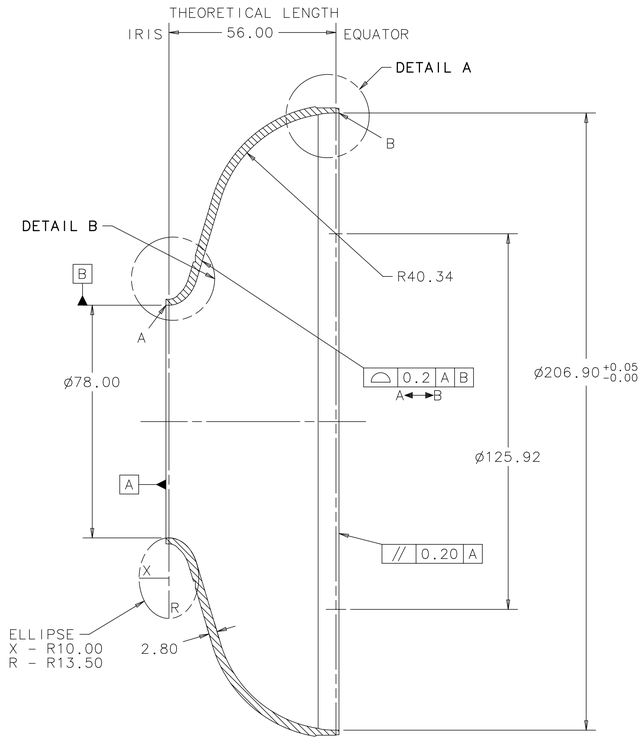

SECTION A-A

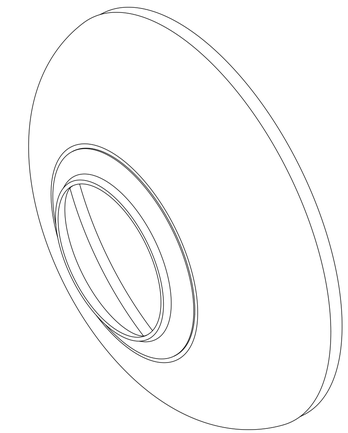

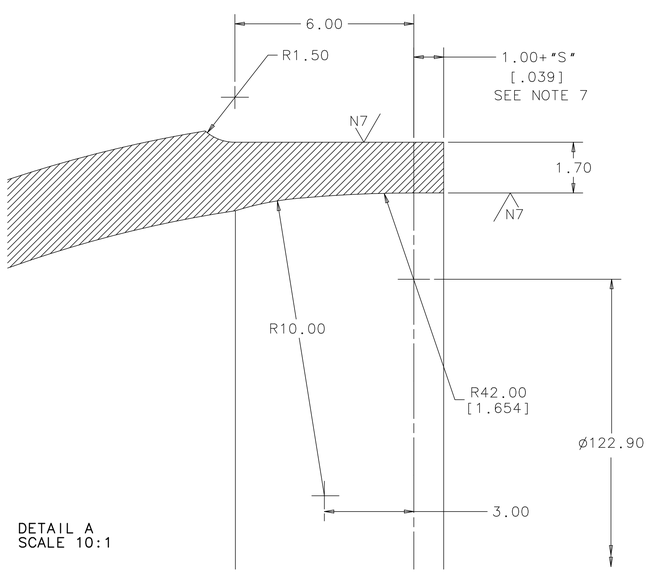

DETAIL A
SCALE 10:1

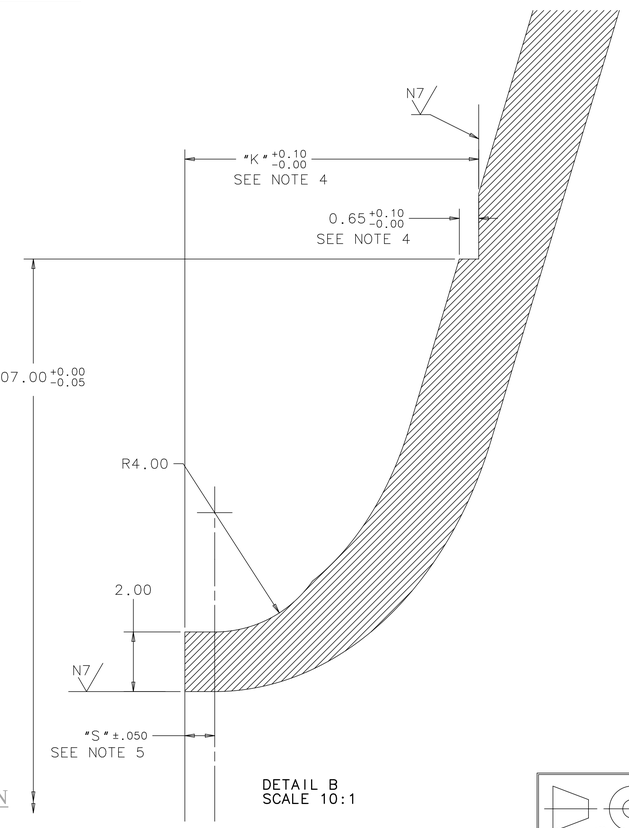

DETAIL B
SCALE 10:1

NOTES:

1) THE INTERNAL SURFACE MUST SHOW NO DAMAGE CAUSED BY FORMING.
2) DIAMETER, FORM, AND POSITION TOLERANCES MEASURED IN THE HALF CELL'S STRAINED CONDITION
3) DO NOT BREAK EDGES ON END CELL
4) DIMENSION "K" DETERMINED BY THE MANUFACTURER SO THAT DIMENSION 0.65 IS KEPT
5) SUPPLEMENT FOR WELD SHRINKAGE TO BE DETERMINED BY EB-WELDERS
6) DUE TO THE MANUFACTURING PROCESS THE WALL THICKNESS BETWEEN THE IRIS AND EQUATOR IS NOT CONSTANT
7) ADDITIONAL MATERIAL NEEDED FOR CELL TUNING PLUS ALLOWANCE FOR E-BEAM WELD SHRINKAGE. FINAL SURFACE TO BE MACHINED UNTIL TUNED.

UNLESS OTHERWISE SPECIFIED			ORIGINATOR	DESY	
.X	.XX	ANGLE	DRAWN	E.PIRTLE	18-APR-2005
± - -	± 0.05	± 1°	CHECKED	D.MITCHELL	16-SEP-2005
1. BREAK ALL SHARP EDGES 0.40 MAX. 2. DO NOT SCALE DRAWING. 3. DIMENSIONS BASED UPON ASME Y14.5M-1994 4. MAX. ALL MACH. SURFACES N8 5. DRAWING UNITS: METRIC, mm			APPROVED	M.FOLEY	16-SEP-2005
			USED ON	MD-439178	
			MATERIAL	RRR 300 NIOBIUM	

FERMI NATIONAL ACCELERATOR LABORATORY
UNITED STATES DEPARTMENT OF ENERGY

DESY 1.3GHZ TESLA RF CAVITY SHORT END HALF CELL

SCALE	DRAWING NUMBER	SHEET	REV
1:1	4904.010-MD-439163	1 OF 1	

CREATED WITH : Ideas11NXSeries | GROUP: ACCELERATOR MECH. SUPPT.

THIS DESIGN IS THE INTELLECTUAL PROPERTY OF DESY ACCORDING TO DIN 34 / ISO 16016. THIS DRAWING HAS BEEN REDRAWN WITH DESY'S PERMISSION FOR FABRICATION PURPOSES WITHIN THE USA AND IS TO BE USED EXCLUSIVELY WITHIN FERMILAB. USAGE OUTSIDE OF FERMILAB MUST BE APPROVED BY DESY.

FOR REFERENCE ONLY
NOT FOR FABRICATION
MAY NOT BE CURRENT

REV	DESCRIPTION	DRAWN	DATE
		APPROVED	DATE
A	CHANGED TOLERANCE FROM 0.02 TO 0.2	E.PIRTLE	26-OCT-2006
		M.FOLEY	26-OCT-2006

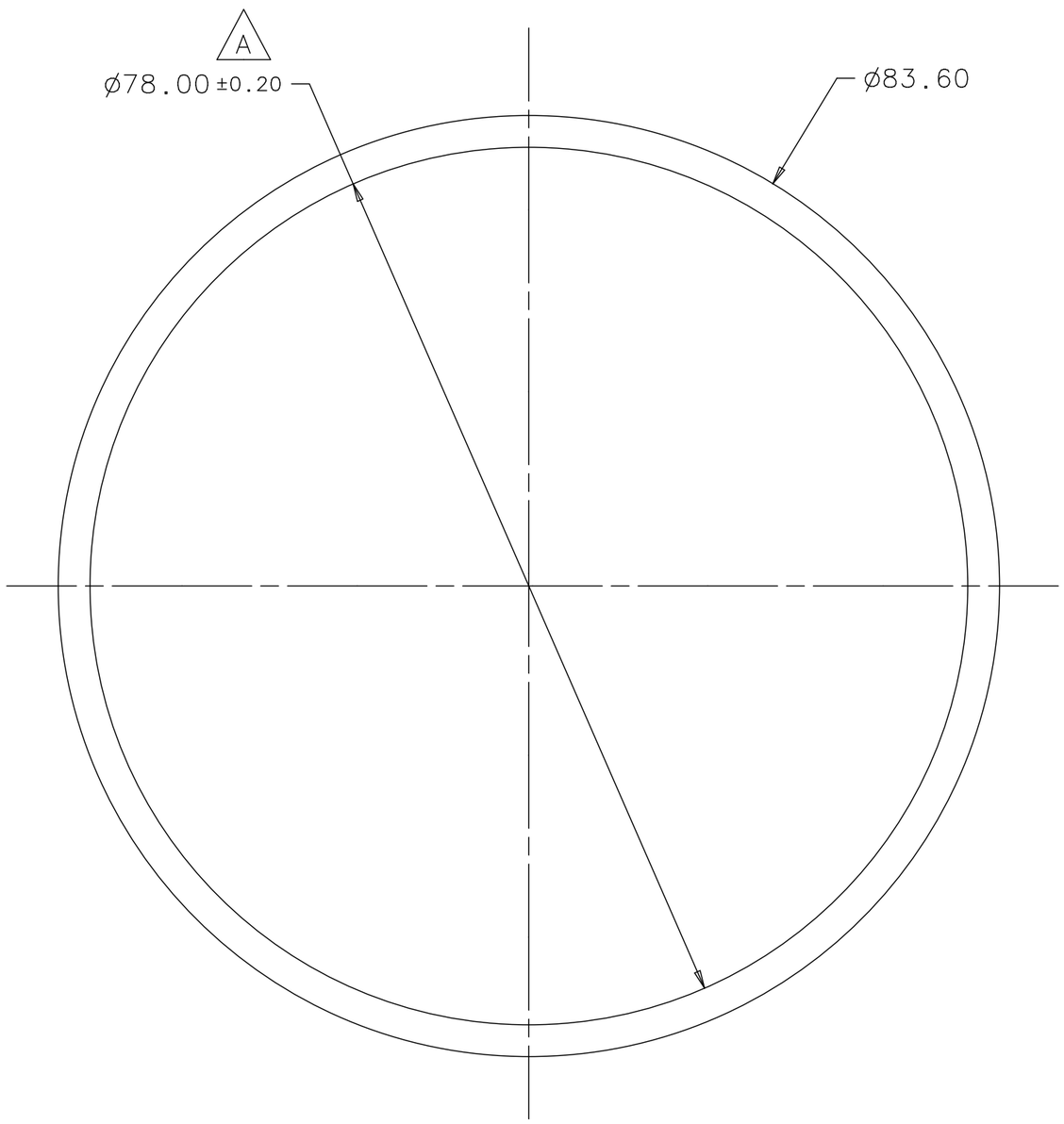

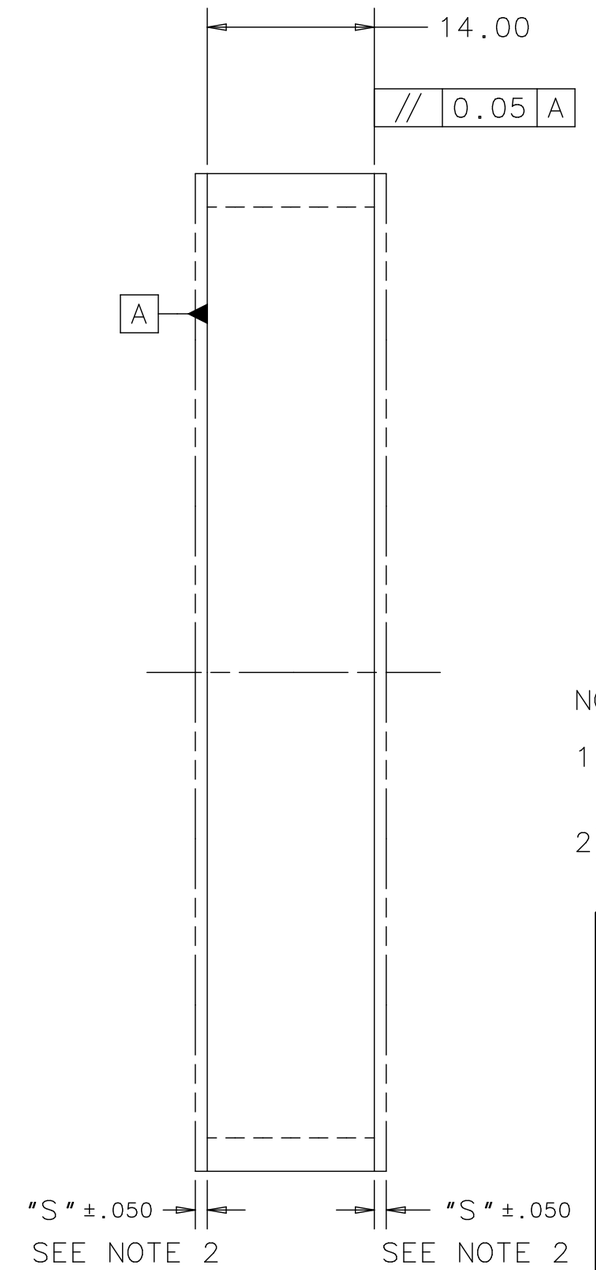

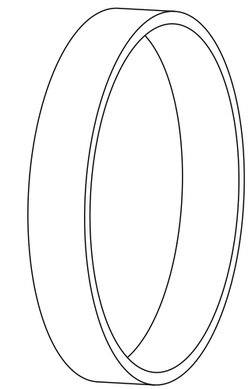

NOTE:

1) SEALING SURFACE MUST BE FREE OF SCRATCHES WITH NO RADIAL SCORING

2) SUPPLEMENT FOR WELD SHRINKAGE TO BE DETERMINED BY E-BEAM WELDERS

UNLESS OTHERWISE SPECIFIED			ORIGINATOR	DESY	
.X	.XX	ANGLE	DRAWN	E.PIRTLE	18-APR-2005
± --	± 0.20	± 1°	CHECKED	D.MITCHELL	16-SEP-2005
			APPROVED	M.FOLEY	16-SEP-2005

1. BREAK ALL SHARP EDGES 0.40 MAX.
2. DO NOT SCALE DRAWING.
3. DIMENSIONS BASED UPON ASME Y14.5M-1994
4. MAX. ALL MACH. SURFACES N8
5. DRAWING UNITS: U.S. INCH

USED ON: MD-439178

MATERIAL: RRR 300 NIOBIUM

FERMI NATIONAL ACCELERATOR LABORATORY
UNITED STATES DEPARTMENT OF ENERGY

DESY 1.3GHZ TESLA RF CAVITY END TUBE SPOOL PIECE

SCALE	DRAWING NUMBER	SHEET	REV
2:1	4904.010-MB-439164	1 OF 1	A

CREATED WITH : Ideas12NXSeries | GROUP: ACCELERATOR MECH. SUPPT.

THIS DESIGN IS THE INTELLECTUAL PROPERTY OF DESY ACCORDING TO DIN 34 / ISO 16016. THIS DRAWING HAS BEEN REDRAWN WITH DESY'S PERMISSION FOR FABRICATION PURPOSES WITHIN THE USA AND IS TO BE USED EXCLUSIVELY WITHIN FERMILAB. USAGE OUTSIDE OF FERMILAB MUST BE APPROVED BY DESY.

FOR REFERENCE ONLY
NOT FOR FABRICATION
MAY NOT BE CURRENT

3RD

REV	DESCRIPTION	DRAWN	DATE
		APPROVED	DATE

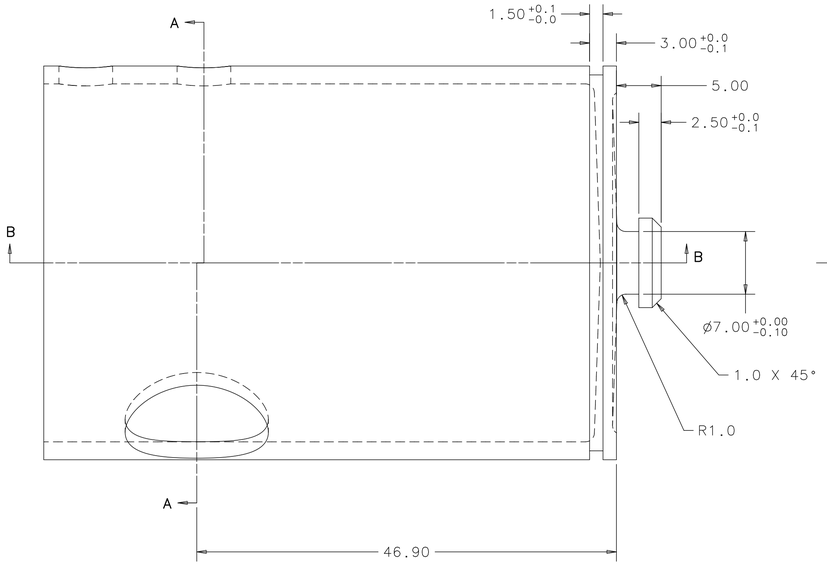

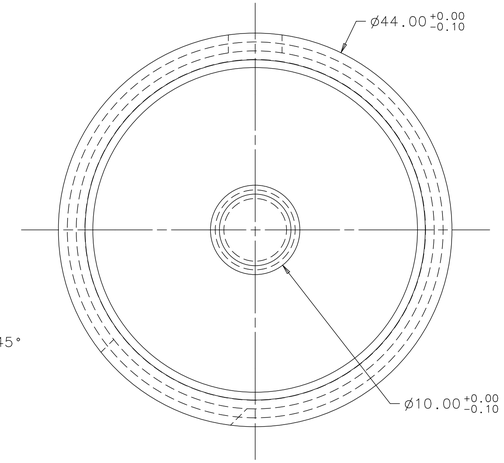

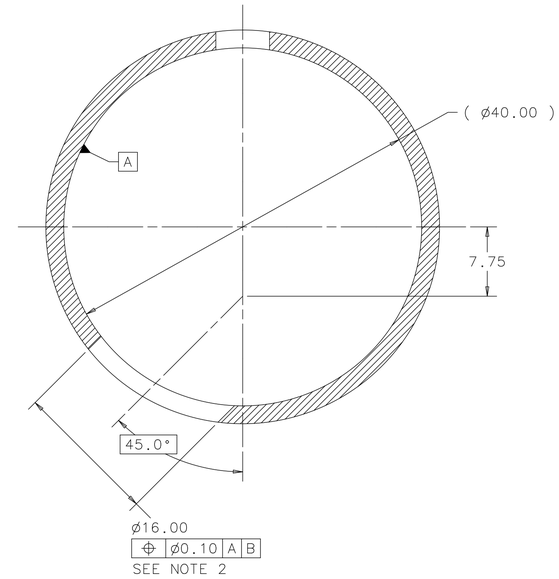

SECTION A-A

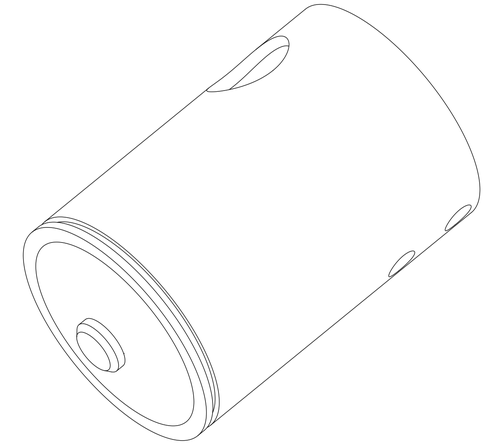

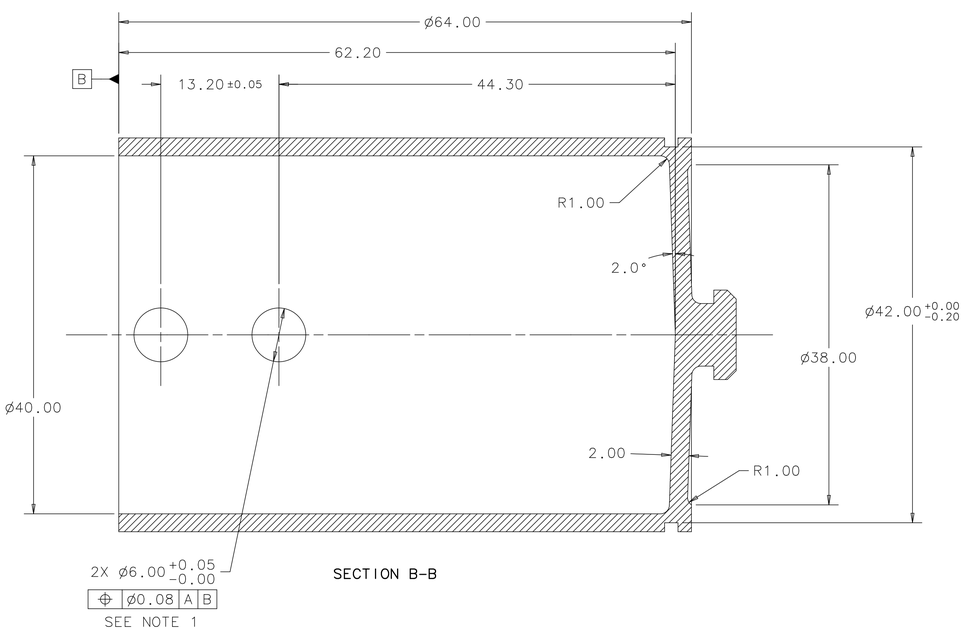

SECTION B-B

NOTES:

1) DIMENSION COORESPONDS WITH PART NUMBER MD-439154. TOLERANCE IS TO BE COORDINATED BETWEEN MANUFACTURERS AND EB-WELDERS

2) DIMENSION COORESPONDS WITH PART NUMBER MB-439157. TOLERANCE IS TO BE COORDINATED BETWEEN MANUFACTURERS AND EB-WELDERS

UNLESS OTHERWISE SPECIFIED			ORIGINATOR	DESY	
.X	.XX	ANGLE	DRAWN	E.PIRTLE	18-APR-2005
± 0.2	± 0.10	±0.5°	CHECKED	D.MITCHELL	16-SEP-2005
1. BREAK ALL SHARP EDGES 0.40 MAX. 2. DO NOT SCALE DRAWING. 3. DIMENSIONS BASED UPON ASME Y14.5M-1994 4. MAX. ALL MACH. SURFACES N7 5. DRAWING UNITS: METRIC, mm			APPROVED	M.FOLEY	20-SEP-2005
			USED ON	MD-439174	
			MATERIAL	RRR 300 NIOBIUM	

FERMI NATIONAL ACCELERATOR LABORATORY
UNITED STATES DEPARTMENT OF ENERGY

DESY 1.3GHZ TESLA RF CAVITY LONG END HOM FORMTEIL HOUSING

SCALE	DRAWING NUMBER	SHEET	REV
3:1	4904.010-MD-439165	1 OF 1	

CREATED WITH : Ideas11NXSeries | GROUP: ACCELERATOR MECH. SUPPT.

THIS DESIGN IS THE INTELLECTUAL PROPERTY OF DESY ACCORDING TO DIN 34 / ISO 16016. THIS DRAWING HAS BEEN REDRAWN WITH DESY'S PERMISSION FOR FABRICATION PURPOSES WITHIN THE USA AND IS TO BE USED EXCLUSIVELY WITHIN FERMILAB. USAGE OUTSIDE OF FERMILAB MUST BE APPROVED BY DESY.

FOR REFERENCE ONLY
NOT FOR FABRICATION
MAY NOT BE CURRENT

REV	DESCRIPTION	DRAWN	DATE
		APPROVED	DATE

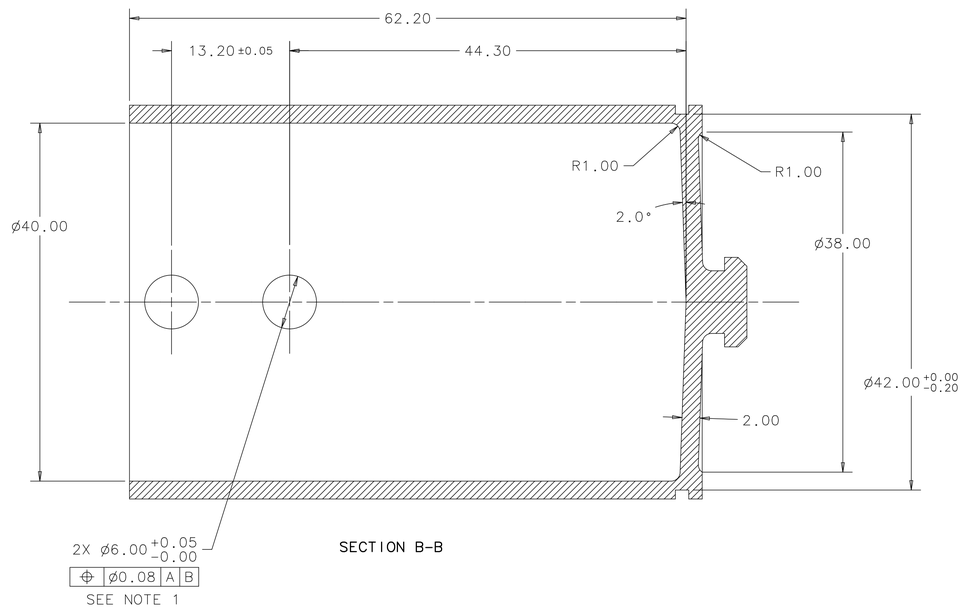

SECTION B-B

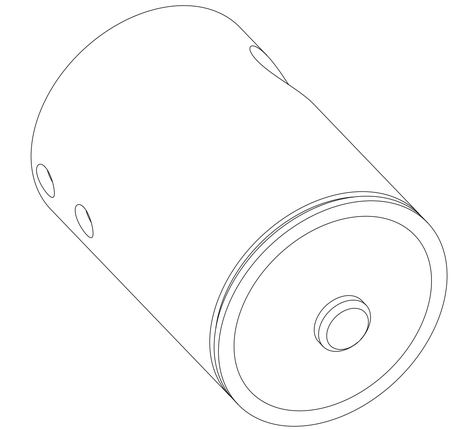

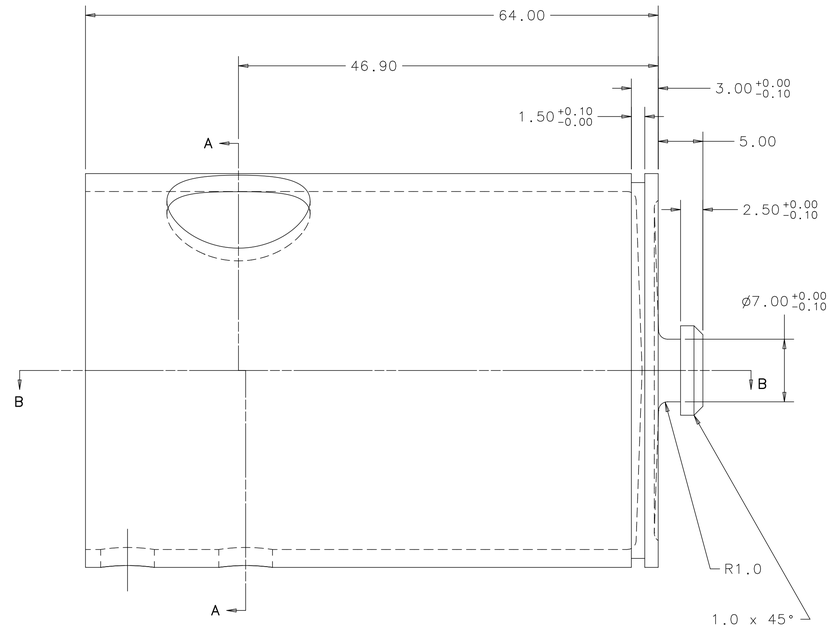

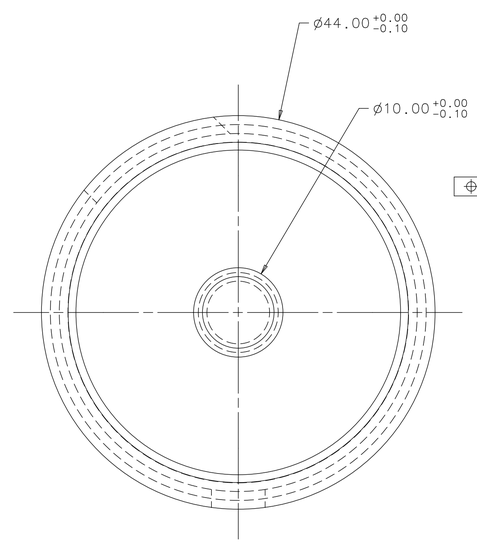

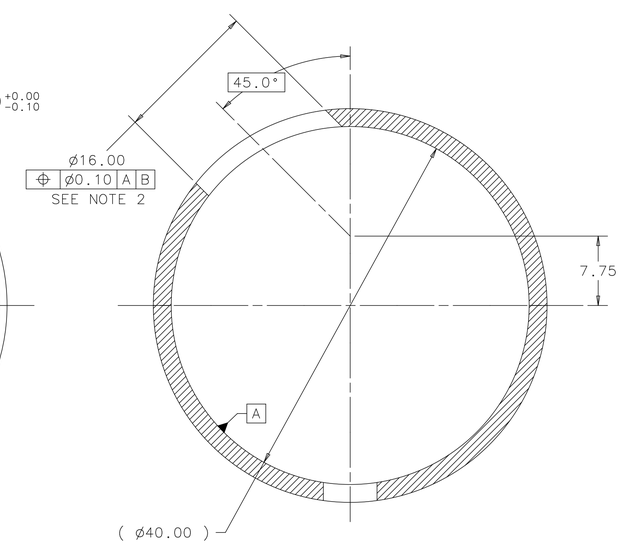

SECTION A-A

NOTES:

1) DIMENSION COORESPONDS WITH PART NUMBER MD-439162. TOLERANCE IS TO BE COORDINATED BETWEEN MANUFACTURERS AND EB-WELDERS

2) DIMENSION COORESPONDS WITH PART NUMBER MD-439175. TOLERANCE IS TO BE COORDINATED BETWEEN MANUFACTURERS AND EB-WELDERS

UNLESS OTHERWISE SPECIFIED			ORIGINATOR	DESY	
.X	.XX	ANGLE	DRAWN	E.PIRTLE	18-APR-2005
± 0.2	± 0.10	±0.5°	CHECKED	D.MITCHELL	16-SEP-2005
1. BREAK ALL SHARP EDGES 0.40 MAX. 2. DO NOT SCALE DRAWING. 3. DIMENSIONS BASED UPON ASME Y14.5M-1994 4. MAX. ALL MACH. SURFACES N7 5. DRAWING UNITS: METRIC, mm			APPROVED	M.FOLEY	20-SEP-2005
			USED ON	MD-439175	
			MATERIAL	RRR 300 NIOBIUM	

FERMI NATIONAL ACCELERATOR LABORATORY
UNITED STATES DEPARTMENT OF ENERGY

DESY 1.3GHZ TESLA RF CAVITY SHORT END HOM FORMTEIL HOUSING

SCALE	DRAWING NUMBER	SHEET	REV
3:1	4904.010-MD-439166	1 OF 1	

CREATED WITH : Ideas11NXSeries | GROUP: ACCELERATOR MECH. SUPPT.

THIS DESIGN IS THE INTELLECTUAL PROPERTY OF DESY ACCORDING TO DIN 34 / ISO 16016. THIS DRAWING HAS BEEN REDRAWN WITH DESY'S PERMISSION FOR FABRICATION PURPOSES WITHIN THE USA AND IS TO BE USED EXCLUSIVELY WITHIN FERMILAB. USAGE OUTSIDE OF FERMILAB MUST BE APPROVED BY DESY.

FOR REFERENCE ONLY
NOT FOR FABRICATION
MAY NOT BE CURRENT

REV	DESCRIPTION	DRAWN	DATE
		APPROVED	DATE

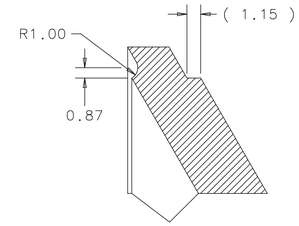

DETAIL A
SCALE 4:1

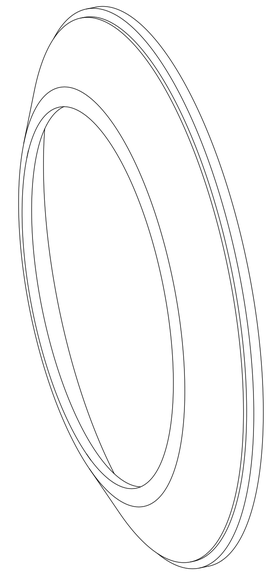

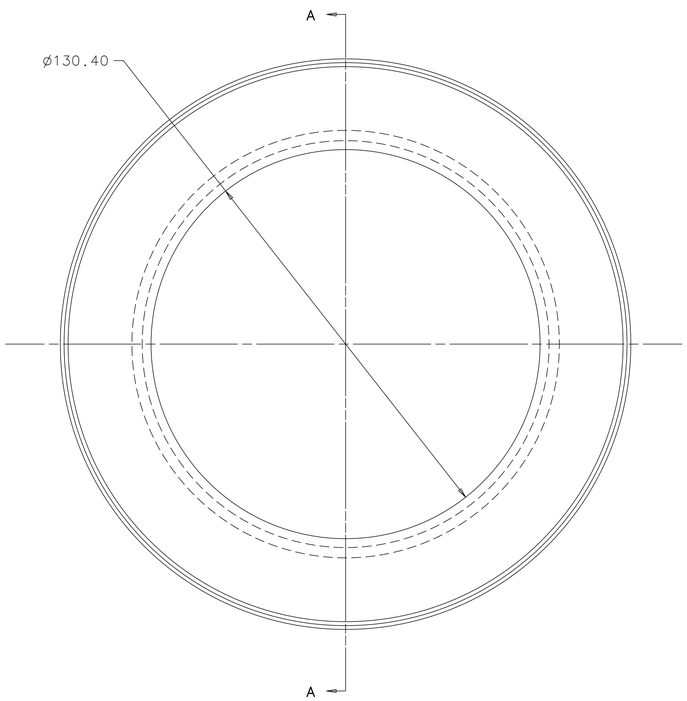

CONTOUR BEFORE THE MACHINING
OPERATION IN DRAWING NUMBER MD-439178

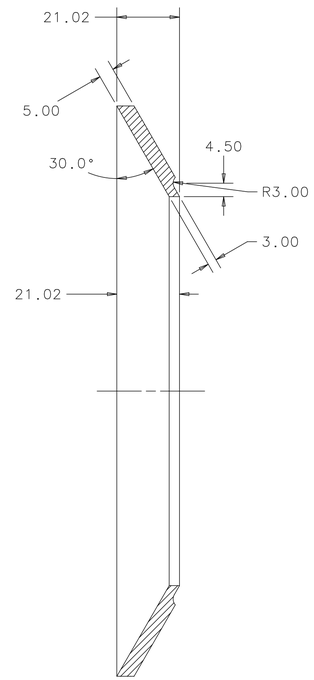

SECTION A-A

CONTOUR AFTER THE MACHINING
OPERATION IN DRAWING NUMBER MD-439178

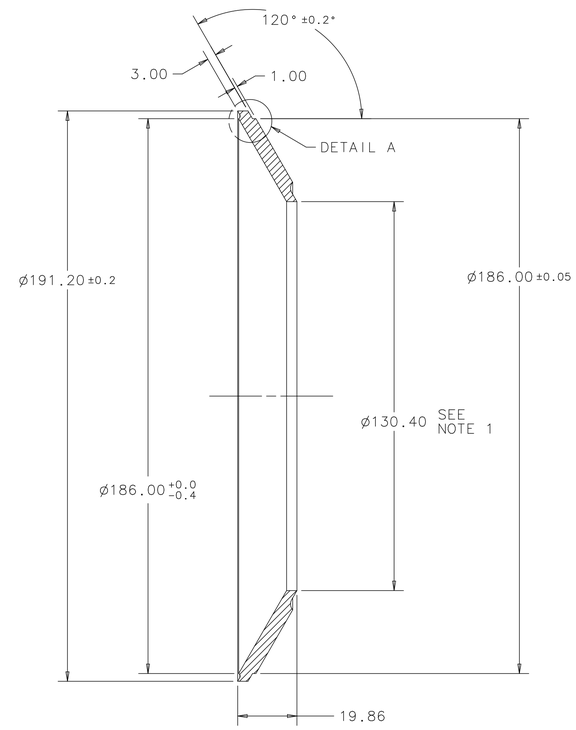

SECTION A-A

NOTE:

1) DIMENSION COORESPONDS WITH PART NUMBER MD-439152. TOLERANCE IS TO BE COORDINATED BETWEEN MANUFACTURERS AND EB-WELDERS

UNLESS OTHERWISE SPECIFIED			ORIGINATOR	DESY	
.X	.XX	ANGLE	DRAWN	E.PIRTLE	18-APR-2005
± - -	± 0.10	±0.5°	CHECKED	D.MITCHELL	16-SEP-2005
1. BREAK ALL SHARP EDGES 0.40 MAX. 2. DO NOT SCALE DRAWING. 3. DIMENSIONS BASED UPON ASME Y14.5M-1994 4. MAX. ALL MACH. SURFACES N7 5. DRAWING UNITS: METRIC, mm			APPROVED	M.FOLEY	16-SEP-2005
			USED ON	MD-439178	
			MATERIAL	NIOBIUM-TITANIUM 55%	

FERMI NATIONAL ACCELERATOR LABORATORY
UNITED STATES DEPARTMENT OF ENERGY

DESY 1.3GHZ TESLA
RF CAVITY
LONG ENDCAP DISK

SCALE	DRAWING NUMBER	SHEET	REV
1:1	4904.010-MD-439167	1 OF 1	

CREATED WITH : Ideas11NXSeries GROUP: ACCELERATOR MECH. SUPPT.

THIS DESIGN IS THE INTELLECTUAL PROPERTY OF DESY ACCORDING TO DIN 34 / ISO 16016. THIS DRAWING HAS BEEN REDRAWN WITH DESY'S PERMISSION FOR FABRICATION PURPOSES WITHIN THE USA AND IS TO BE USED EXCLUSIVELY WITHIN FERMILAB. USAGE OUTSIDE OF FERMILAB MUST BE APPROVED BY DESY.

FOR REFERENCE ONLY
NOT FOR FABRICATION
MAY NOT BE CURRENT

REV	DESCRIPTION	DRAWN	DATE
		APPROVED	DATE

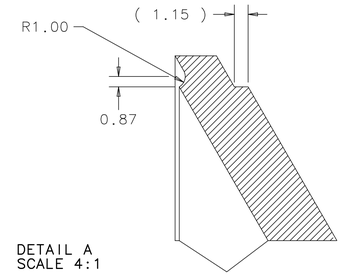

DETAIL A
SCALE 4:1

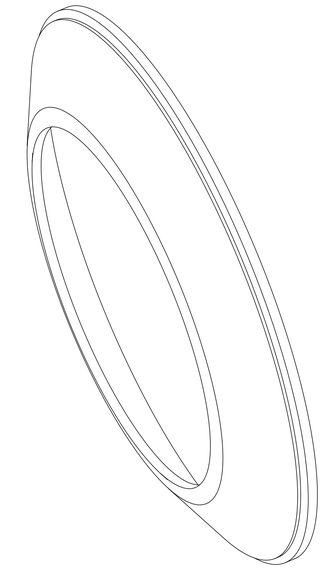

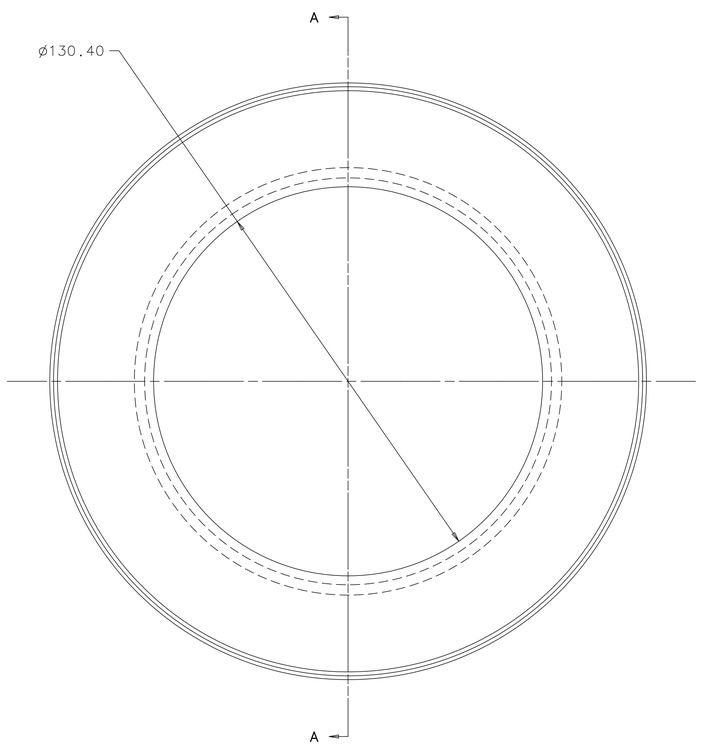

CONTOUR BEFORE THE MACHINING
OPERATION IN DRAWING NUMBER MD-439178

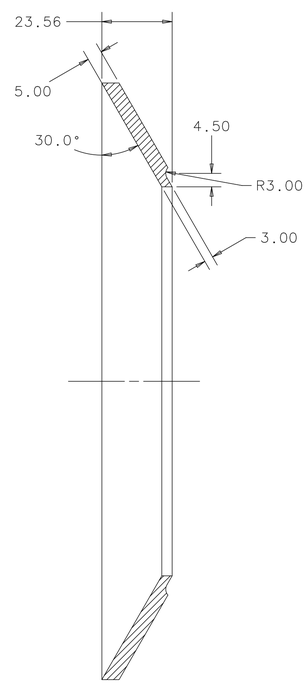

SECTION A-A

CONTOUR AFTER THE MACHINING
OPERATION IN DRAWING NUMBER MD-439178

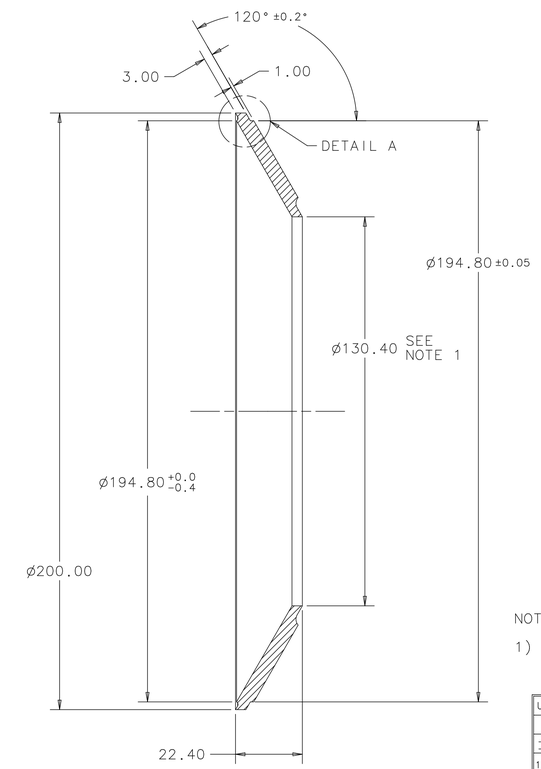

SECTION A-A

NOTE:

1) DIMENSION COORESPONDS WITH PART NUMBER MD-439152. TOLERANCE IS TO BE COORDINATED BETWEEN MANUFACTURERS AND EB-WELDERS

UNLESS OTHERWISE SPECIFIED			ORIGINATOR	DESY	
.X	.XX	ANGLE	DRAWN	E.PIRTLE	18-APR-2005
± - -	± 0.20	± 1°	CHECKED	D.MITCHELL	16-SEP-2005
1. BREAK ALL SHARP EDGES 0.40 MAX. 2. DO NOT SCALE DRAWING. 3. DIMENSIONS BASED UPON ASME Y14.5M-1994 4. MAX. ALL MACH. SURFACES N7 5. DRAWING UNITS: METRIC, mm			APPROVED	M.FOLEY	16-SEP-2005
			USED ON	MD-439178	
			MATERIAL	NIOBIUM-TITANIUM 55%	

FERMI NATIONAL ACCELERATOR LABORATORY
UNITED STATES DEPARTMENT OF ENERGY

DESY 1.3GHZ TESLA
RF CAVITY
SHORT ENDCAP DISK

SCALE	DRAWING NUMBER	SHEET	REV
1:1	4904.010-MD-439168	1 OF 1	

CREATED WITH : Ideas11NXSeries | GROUP: ACCELERATOR MECH. SUPPT.

THIS DESIGN IS THE INTELLECTUAL PROPERTY OF DESY ACCORDING TO DIN 34 / ISO 16016. THIS DRAWING HAS BEEN REDRAWN WITH DESY'S PERMISSION FOR FABRICATION PURPOSES WITHIN THE USA AND IS TO BE USED EXCLUSIVELY WITHIN FERMILAB. USAGE OUTSIDE OF FERMILAB MUST BE APPROVED BY DESY.

FOR REFERENCE ONLY
NOT FOR FABRICATION
MAY NOT BE CURRENT

REV	DESCRIPTION	DRAWN	DATE
		APPROVED	DATE
A	CHANGED MATERIAL FROM RRR 40 TO RRR 300	E.PIRTLE	26-OCT-2006
		M.FOLEY	26-OCT-2006

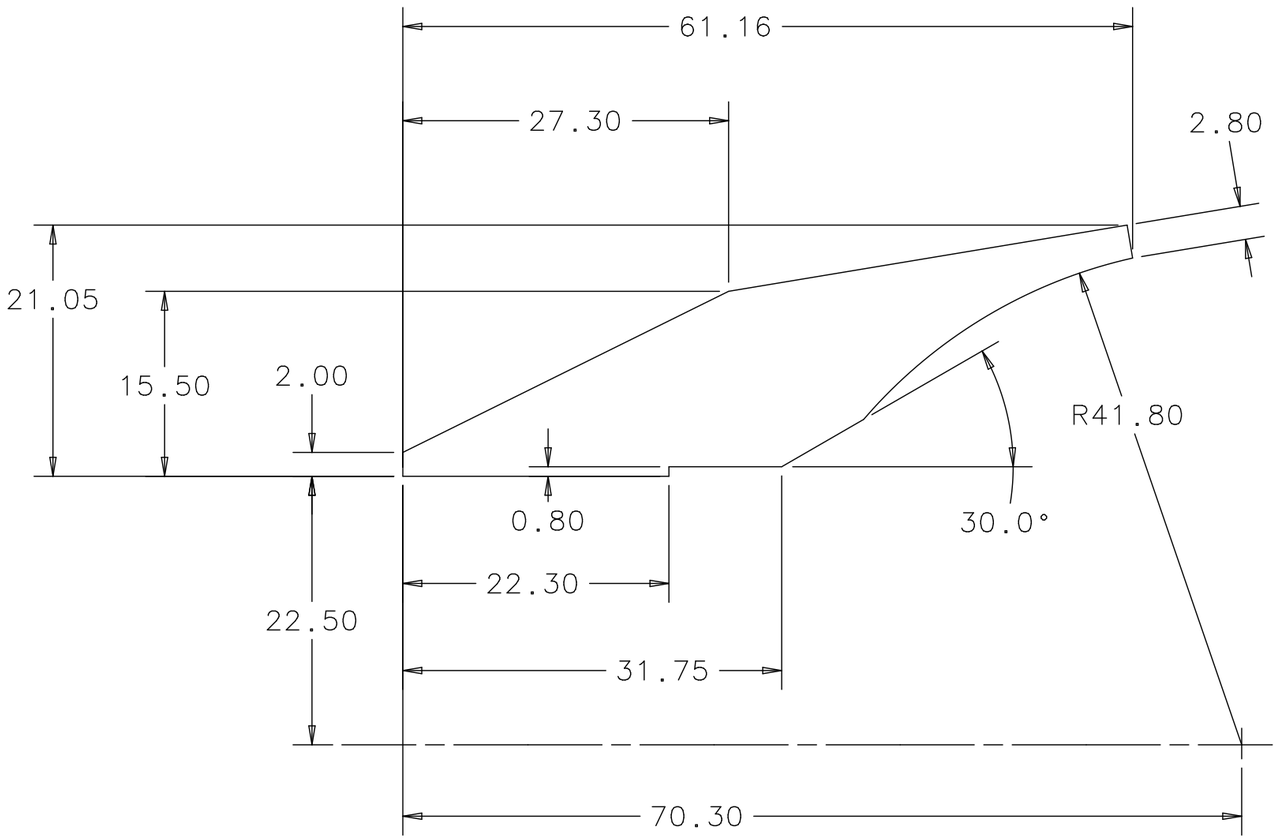

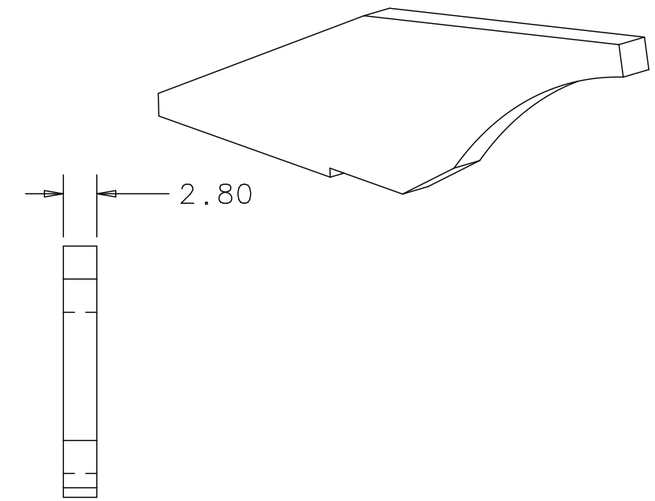

UNLESS OTHERWISE SPECIFIED			ORIGINATOR	DESY	
.X	.XX	ANGLE	DRAWN	E.PIRTLE	18-APR-2005
± - -	± 0.20	± 1°	CHECKED	D.MITCHELL	16-SEP-2005
			APPROVED	M.FOLEY	16-SEP-2005

1. BREAK ALL SHARP EDGES 0.40 MAX.
2. DO NOT SCALE DRAWING.
3. DIMENSIONS BASED UPON ASME Y14.5M-1994
4. MAX. ALL MACH. SURFACES N8
5. DRAWING UNITS: U.S. INCH

USED ON: MD-439177

MATERIAL: RRR 300 NIOBIUM

FERMI NATIONAL ACCELERATOR LABORATORY
UNITED STATES DEPARTMENT OF ENERGY

DESY 1.3GHZ TESLA RF CAVITY SHORT END TUBE RIB

SCALE	DRAWING NUMBER	SHEET	REV
2:1	4904.010-MB-439169	1 OF 1	A

CREATED WITH : Ideas12NXSeries | GROUP: ACCELERATOR MECH. SUPPT.

THIS DESIGN IS THE INTELLECTUAL PROPERTY OF DESY ACCORDING TO DIN 34 / ISO 16016. THIS DRAWING HAS BEEN REDRAWN WITH DESY'S PERMISSION FOR FABRICATION PURPOSES WITHIN THE USA AND IS TO BE USED EXCLUSIVELY WITHIN FERMILAB. USAGE OUTSIDE OF FERMILAB MUST BE APPROVED BY DESY.

FOR REFERENCE ONLY
NOT FOR FABRICATION
MAY NOT BE CURRENT

3RD

REV	DESCRIPTION	DRAWN	DATE
		APPROVED	DATE
A	CHANGED MATERIAL FROM RRR 30 TO RRR 300	E.PIRTLE	26-OCT-2006
		M.FOLEY	26-OCT-2006

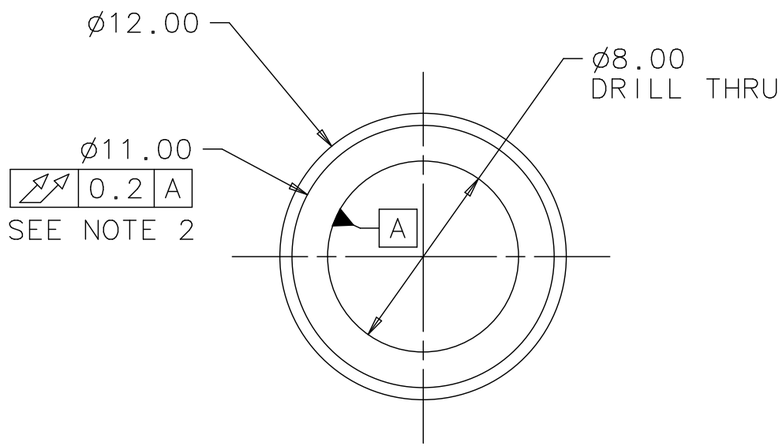

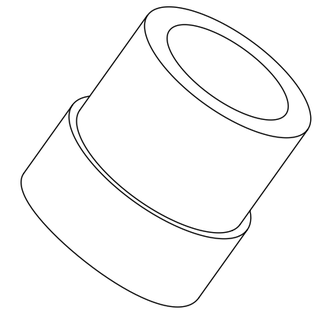

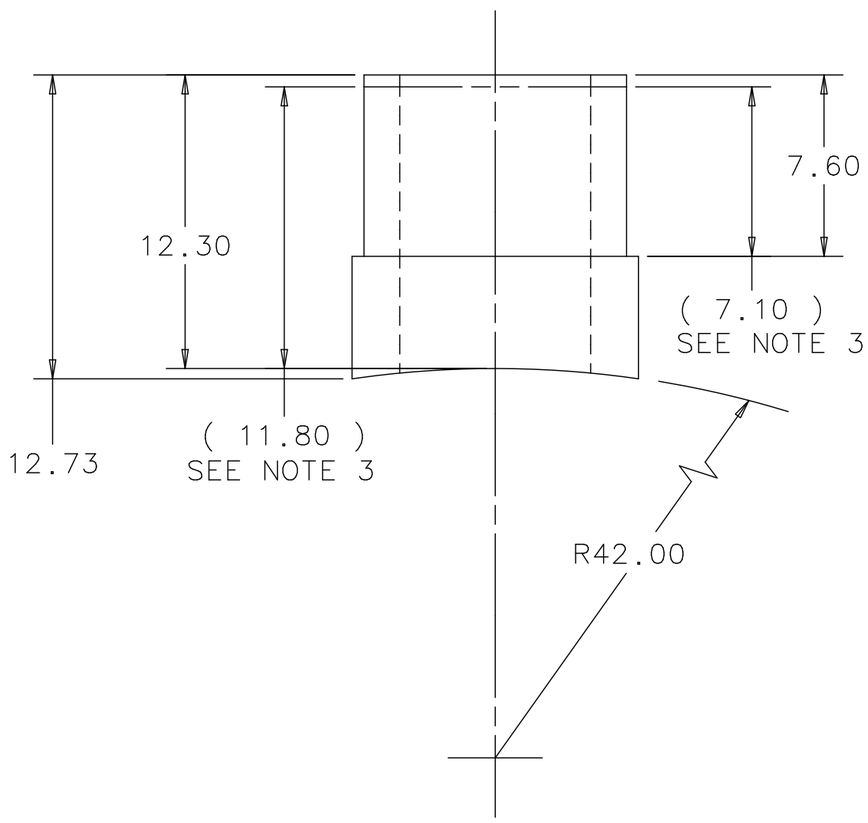

NOTE:

1) SURFACE FREE OF DAMAGE

2) DIMENSION COORESPONDS WITH PART NUMBER MB-439160. TOLERANCE IS TO BE COORDINATED BETWEEN MANUFACTURERS AND EB-WELDERS

3) FINAL LENGTH AFTER MACHINING OPERATION DETAILED ON DRAWING NUMBER MD-439179

UNLESS OTHERWISE SPECIFIED			ORIGINATOR	DESY	
.X	.XX	ANGLE	DRAWN	E.PIRTLE	18-APR-2005
± --	± 0.20	± 1°	CHECKED	D.MITCHELL	16-SEP-2005
1. BREAK ALL SHARP EDGES 0.40 MAX. 2. DO NOT SCALE DRAWING. 3. DIMENSIONS BASED UPON ASME Y14.5M-1994 4. MAX. ALL MACH. SURFACES N8 5. DRAWING UNITS: U.S. INCH			APPROVED	M.FOLEY	20-SEP-2005
			USED ON	MD-439176	
			MATERIAL	RRR 300 NIOBIUM	

FERMI NATIONAL ACCELERATOR LABORATORY
UNITED STATES DEPARTMENT OF ENERGY

DESY 1.3GHZ TESLA RF CAVITY LONG END ANTENNA SPOOL PIECE

SCALE	DRAWING NUMBER	SHEET	REV
4:1	4904.010-MB-439170	1 OF 1	A

CREATED WITH : Ideas12NXSeries | GROUP: ACCELERATOR MECH. SUPPT.

3RD

THIS DESIGN IS THE INTELLECTUAL PROPERTY OF DESY ACCORDING TO DIN 34 / ISO 16016. THIS DRAWING HAS BEEN REDRAWN WITH DESY'S PERMISSION FOR FABRICATION PURPOSES WITHIN THE USA AND IS TO BE USED EXCLUSIVELY WITHIN FERMILAB. USAGE OUTSIDE OF FERMILAB MUST BE APPROVED BY DESY.

FOR REFERENCE ONLY
NOT FOR FABRICATION
MAY NOT BE CURRENT

REV	DESCRIPTION	DRAWN	DATE
		APPROVED	DATE

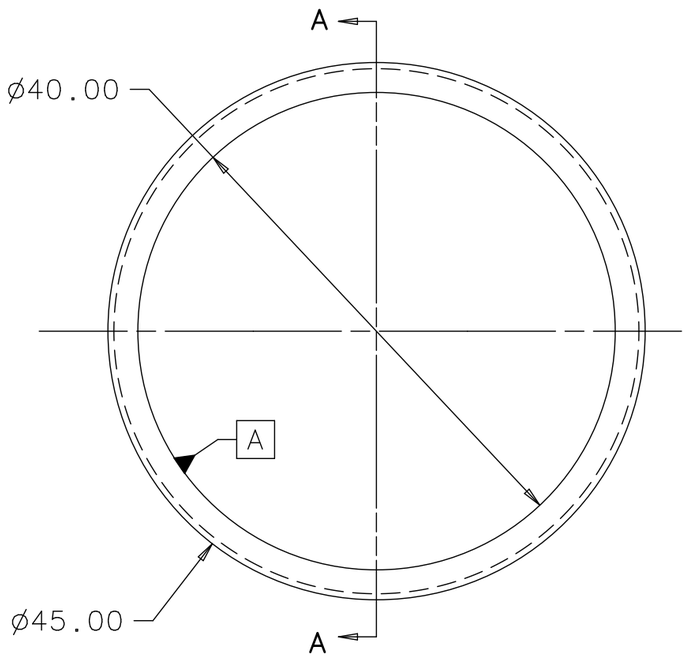

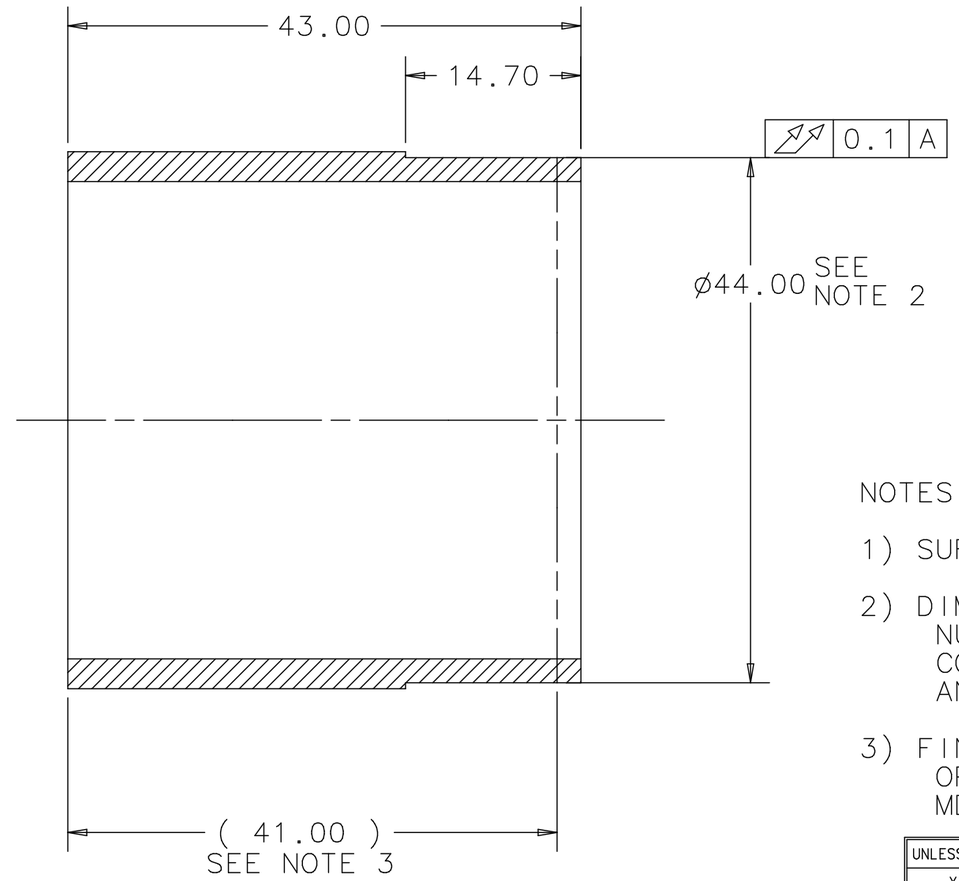

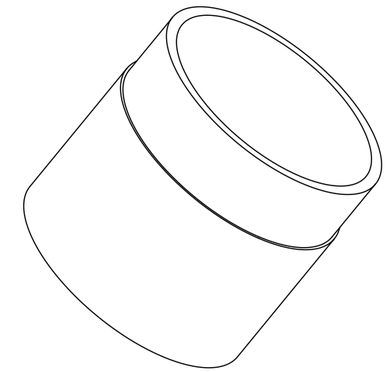

SECTION A-A

NOTES:

1) SURFACE FREE OF DAMAGE

2) DIMENSION COORESPONDS WITH PART NUMBER MB-439158. TOLERANCE IS TO BE COORDINATED BETWEEN MANUFACTURERS AND EB-WELDERS

3) FINAL LENGTH AFTER MACHINING OPERATION DETAILED ON DRAWING NUMBER MD-439180

UNLESS OTHERWISE SPECIFIED			ORIGINATOR	DESY	
.X	.XX	ANGLE	DRAWN	E.PIRTLE	18-APR-2005
± - -	± 0.20	± 1°	CHECKED	D.MITCHELL	16-SEP-2005
1. BREAK ALL SHARP EDGES 0.40 MAX. 2. DO NOT SCALE DRAWING. 3. DIMENSIONS BASED UPON ASME Y14.5M-1994 4. MAX. ALL MACH. SURFACES N8 5. DRAWING UNITS: METRIC, mm			APPROVED	M.FOLEY	20-SEP-2005
			USED ON	MD-439177	
			MATERIAL	RRR 300 NIOBIUM	

FERMI NATIONAL ACCELERATOR LABORATORY
UNITED STATES DEPARTMENT OF ENERGY

DESY 1.3GHZ TESLA
RF CAVITY
COUPLER SPOOL PIECE

SCALE	DRAWING NUMBER	SHEET	REV
2:1	4904.010-MB-439171	1 OF 1	

3RD

CREATED WITH : Ideas11NXSeries GROUP: ACCELERATOR MECH. SUPPT.

THIS DESIGN IS THE INTELLECTUAL PROPERTY OF DESY ACCORDING TO DIN 34 / ISO 16016. THIS DRAWING HAS BEEN REDRAWN WITH DESY'S PERMISSION FOR FABRICATION PURPOSES WITHIN THE USA AND IS TO BE USED EXCLUSIVELY WITHIN FERMILAB. USAGE OUTSIDE OF FERMILAB MUST BE APPROVED BY DESY.

FOR REFERENCE ONLY
NOT FOR FABRICATION
MAY NOT BE CURRENT

REV	DESCRIPTION	DRAWN	DATE
		APPROVED	DATE

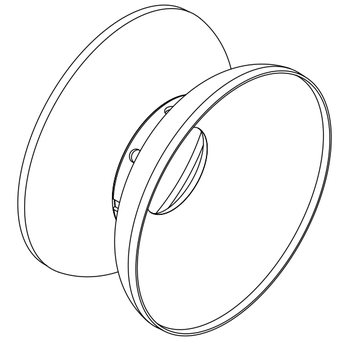

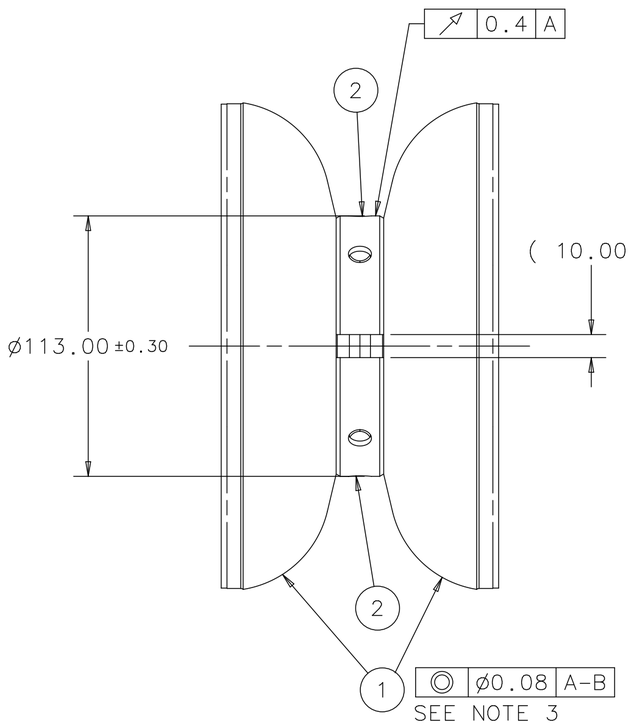

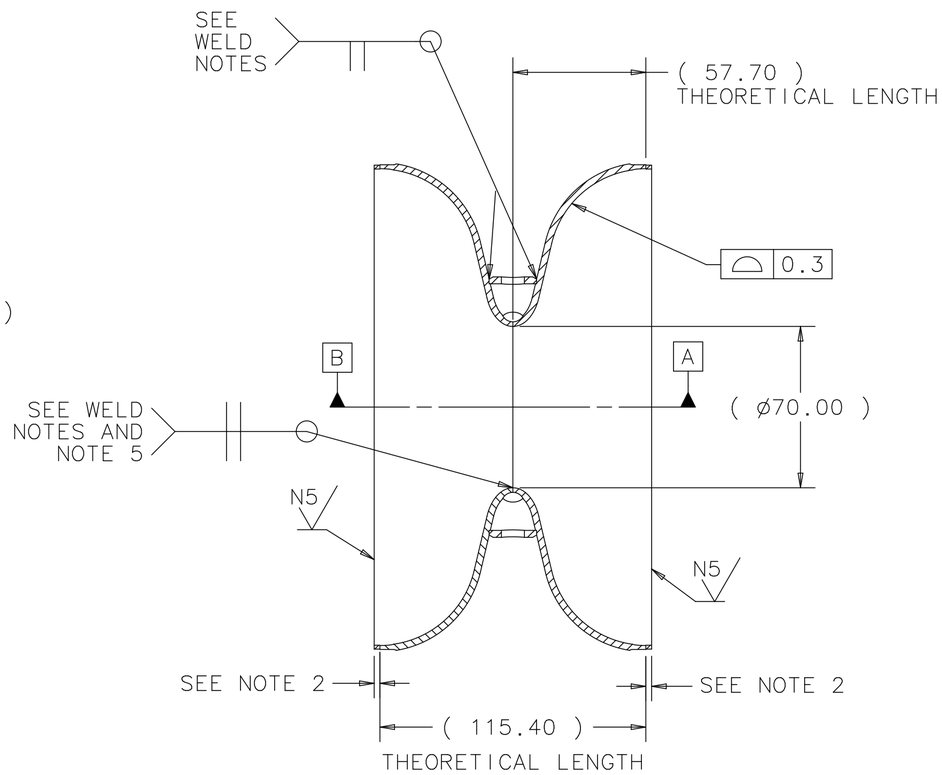

WELDING NOTES:

1) ASSEMBLY TO BE VACUUM TIGHT. NO LEAK SHALL BE DETECTABLE ON THE MOST SENSITIVE SCALE OF A HELIUM MASS SPECTROMETER LEAK DETECTOR WITH A MINIMUM SENSITIVITY OF 2×10^{-10} ATM-CC/SEC FOR HELIUM.
2) ASSEMBLY TO BE CLEANED, AND PACKAGED SO AS TO ASSURE NO CONTAMINATION FROM FOREIGN MATERIALS, METAL CHIPS OR OTHER CONTAMINATES. CLEANING PROCEDURE TO BE APPROVED BY FERMILAB.
3) ALL DESIGN, ASSEMBLY, AND HANDLING IS TO CONFORM TO STANDARD ULTRA HIGH VACUUM PRACTICES
4) ALL ELECTRON BEAM WELDING, ACID ETCHING, CLEANLINESS, AND HANDLING PROCEDURES ARE DETAILED IN DESY SPECIFICATION MHF-SL 1-1999 AND MUST BE FOLLOWED.

NOTES:

1) RF SURFACES IS TO BE FREE OF DAMAGE
2) ADDITIONAL MATERIAL NEEDED FOR CELL TUNING PLUS ALLOWANCE FOR E-BEAM WELD SHRINKAGE. FINAL SURFACE TO BE MACHINED UNTIL TUNED.
3) ALL PARTS ARE TO BE CONCENTRIC WITHIN ø0.08mm ALONG DATUM A AND B
4) DO NOT BREAK EDGES ON END CELL
5) DUAL PASS WELD -- WELD BOTH SIDES TO ENSURE OVERLAP

ITEM	PART NO.	DESCRIPTION OR SIZE	QTY.
2	MB-439151	HALF CELL SUPPORT RING HALF	2
1	MD-439156	NORMAL HALF CELL	2

PARTS LIST

UNLESS OTHERWISE SPECIFIED			ORIGINATOR	DESY	
.X	.XX	ANGLE	DRAWN	E.PIRTLE	18-APR-2005
± --	± 0.10	± 1°	CHECKED	D.MITCHELL	16-SEP-2005
			APPROVED	M.FOLEY	20-SEP-2005

1. BREAK ALL SHARP EDGES 0.40 MAX.
2. DO NOT SCALE DRAWING.
3. DIMENSIONS BASED UPON ASME Y14.5M-1994
4. MAX. ALL MACH. SURFACES N7
5. DRAWING UNITS: METRIC, mm

USED ON: MD-439173

MATERIAL: SEE PARTS LIST

FERMI NATIONAL ACCELERATOR LABORATORY
UNITED STATES DEPARTMENT OF ENERGY

DESY 1.3GHZ TESLA RF CAVITY DUMBELL

SCALE	DRAWING NUMBER	SHEET	REV
1:2	4904.010-MC-439172	1 OF 1	

CREATED WITH : Ideas11NXSeries GROUP: ACCELERATOR MECH. SUPPT.

THIS DESIGN IS THE INTELLECTUAL PROPERTY OF DESY ACCORDING TO DIN 34 / ISO 16016. THIS DRAWING HAS BEEN REDRAWN WITH DESY'S PERMISSION FOR FABRICATION PURPOSES WITHIN THE USA AND IS TO BE USED EXCLUSIVELY WITHIN FERMILAB. USAGE OUTSIDE OF FERMILAB MUST BE APPROVED BY DESY.

FOR REFERENCE ONLY
NOT FOR FABRICATION
MAY NOT BE CURRENT

3RD

REV	DESCRIPTION	DRAWN	DATE
		APPROVED	DATE

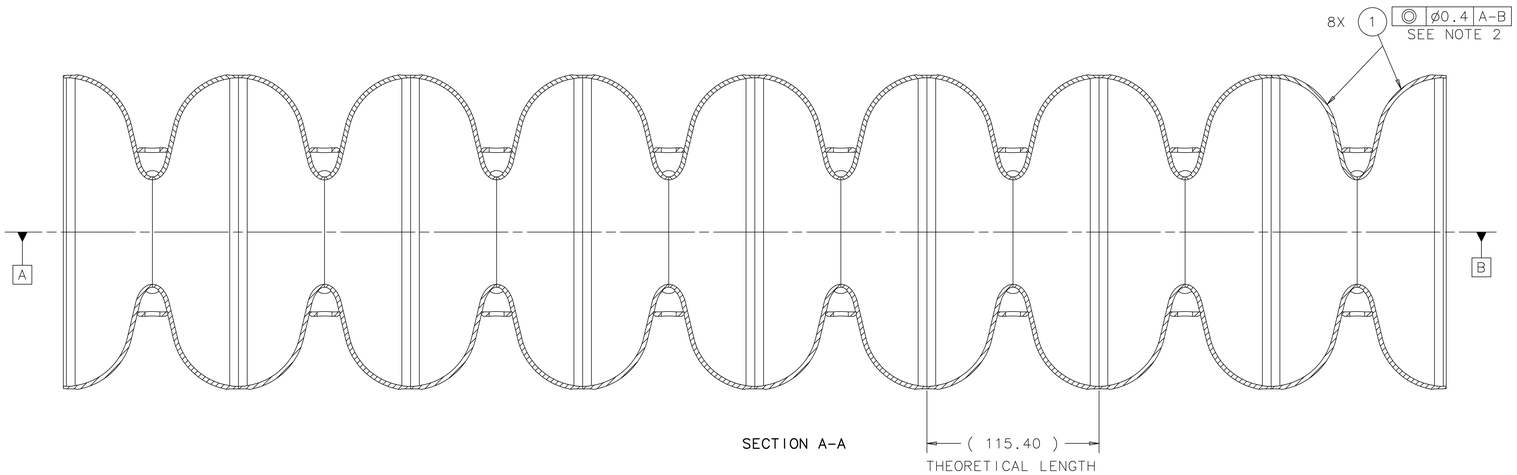

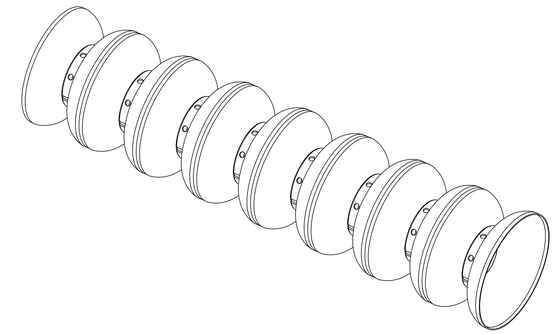

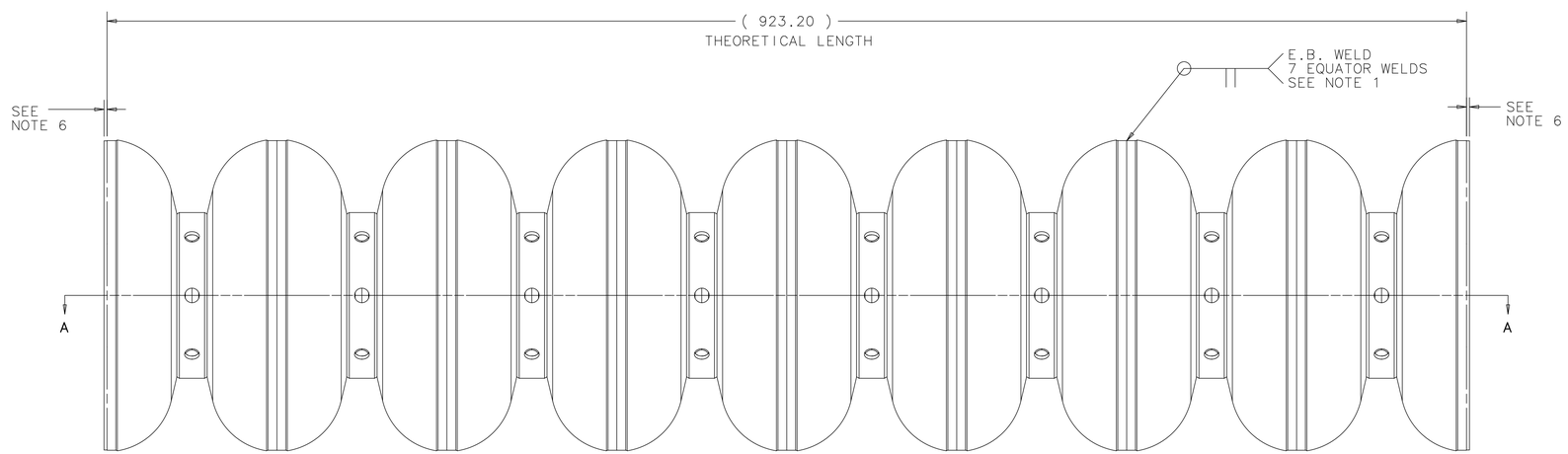

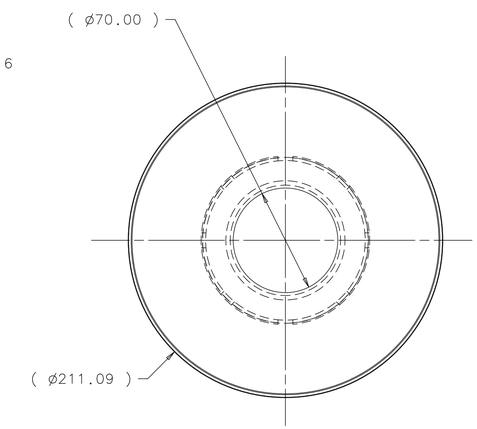

NOTES:

1) ENSURE THAT THE CLOCKING OF THE SUPPORT RINGS ON THE DUMBELL WELDMENTS ARE HELD TO ±.5°

2) ALL PARTS ARE TO BE CONCENTRIC WITHIN ø0.4mm ALONG DATUM A AND B

3) DEFINITION OF FORM AND TOLERANCES CONCERNING WELD JOINT PREPARATION AT THE IRIS AND THE EQUATOR TO BE COORDINATED BETWEEN MANUFACTURERS AND FNAL

4) INDIVIDUAL PART DIMENSIONS ARE FINAL LENGTH AFTER ACID ETCHING AND TUNING

5) THIS DEVICE IS EASILY DEFORMED. A FIXTURE IS REQUIRED FOR ALL HANDLING.

6) ADDITIONAL MATERIAL NEEDED FOR CELL TUNING PLUS ALLOWANCE FOR E-BEAM WELD SHRINKAGE. FINAL SURFACE TO BE MACHINED UNTIL TUNED.

7) DO NOT BREAK SHARP EDGES ON END CELL

WELDING NOTES:
1) ASSEMBLY TO BE VACUUM TIGHT. NO LEAK SHALL BE DETECTABLE ON THE MOST SENSITIVE SCALE OF A HELIUM MASS SPECTROMETER LEAK DETECTOR WITH A MINIMUM SENSITIVITY OF 2×10^{-10} ATM-CC/SEC FOR HELIUM.
2) ASSEMBLY TO BE CLEANED, AND PACKAGED SO AS TO ASSURE NO CONTAMINATION FROM FOREIGN MATERIALS, METAL CHIPS OR OTHER CONTAMINATES. CLEANING PROCEDURE TO BE APPROVED BY FERMILAB.
3) ALL DESIGN, ASSEMBLY, AND HANDLING IS TO CONFORM TO STANDARD ULTRA HIGH VACUUM PRACTICES
4) ALL ELECTRON BEAM WELDING, ACID ETCHING, CLEANLINESS, AND HANDLING PROCEDURES ARE DETAILED IN DESY SPECIFICATION MHF-SL 1-1999 AND MUST BE FOLLOWED.

ITEM	PART NO.	DESCRIPTION OR SIZE	QTY.
1	MC-439172	BARBELL WELDMENT AND SUPPORT RINGS ASSY	8

PARTS LIST

UNLESS OTHERWISE SPECIFIED			ORIGINATOR	DESY	
.XX mm	.XXX in	ANGLE	DRAWN	E.PIRTLE	18-APR-2005
± 0.05	± .002	± 1°	CHECKED	D.MITCHELL	16-SEP-2005
			APPROVED	M.FOLEY	16-SEP-2005

1. BREAK ALL SHARP EDGES 0.4mm/.015in MAX.
2. DO NOT SCALE DRAWING.
3. DIMENSIONS BASED UPON ASME Y14.5M-1994
4. MAX. ALL MACH. SURFACES N7
5. DRAWING UNITS: METRIC

USED ON

MATERIAL SEE PARTS LIST

FERMI NATIONAL ACCELERATOR LABORATORY
UNITED STATES DEPARTMENT OF ENERGY

DESY 1.3GHZ TESLA
RF CAVITY
DUMBBELL WELDMENT

SCALE	DRAWING NUMBER	SHEET	REV
1:2	4904.010-MD-439173	1 OF 1	

3RD

CREATED WITH : Ideas11NXSeries GROUP: ACCELERATOR MECH. SUPPT.

THIS DESIGN IS THE INTELLECTUAL PROPERTY OF DESY ACCORDING TO DIN 34 / ISO 16016. THIS DRAWING HAS BEEN REDRAWN WITH DESY'S PERMISSION FOR FABRICATION PURPOSES WITHIN THE USA AND IS TO BE USED EXCLUSIVELY WITHIN FERMILAB. USAGE OUTSIDE OF FERMILAB MUST BE APPROVED BY DESY.

FOR REFERENCE ONLY
NOT FOR FABRICATION
MAY NOT BE CURRENT

REV	DESCRIPTION	DRAWN	DATE
		APPROVED	DATE

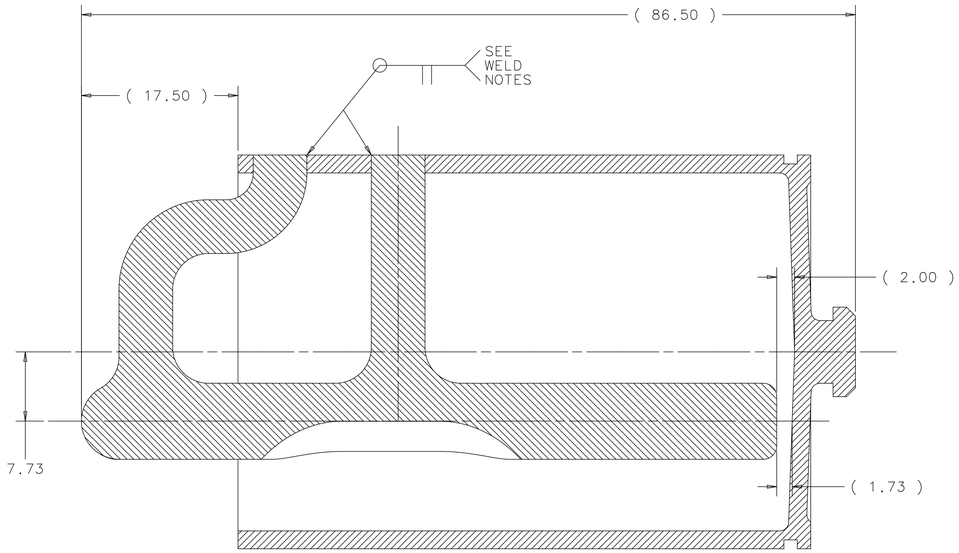

SECTION A-A

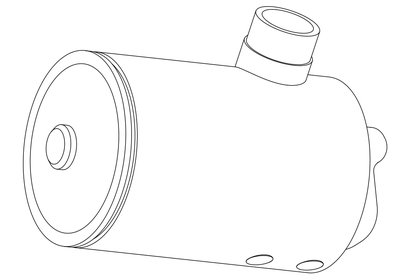

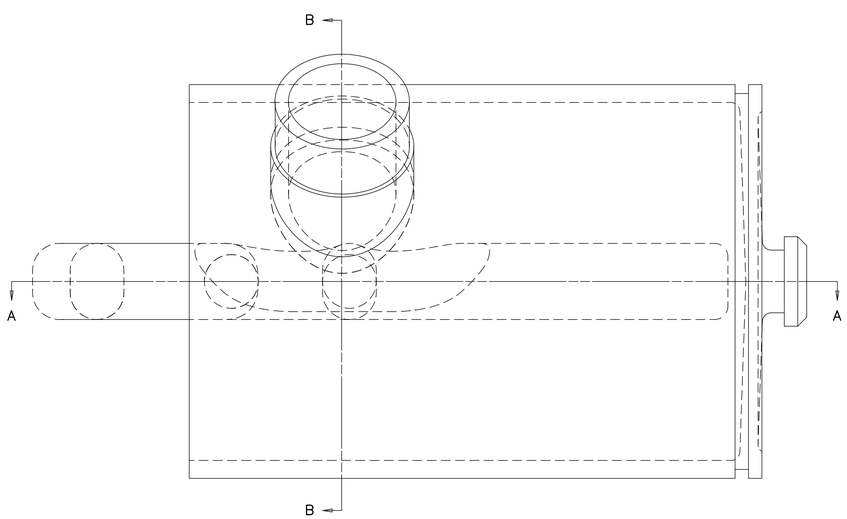

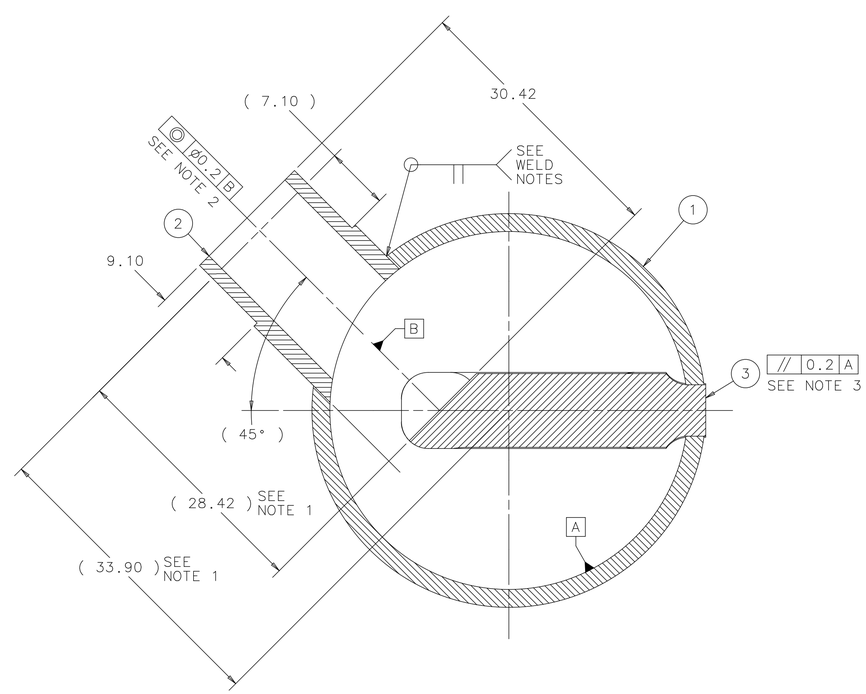

SECTION B-B

WELDING NOTES:
1) ASSEMBLY TO BE VACUUM TIGHT.
NO LEAK SHALL BE DETECTABLE ON THE MOST SENSITIVE SCALE OF A HELIUM MASS SPECTROMETER LEAK DETECTOR WITH A MINIMUM SENSITIVITY OF $2x10^{-10}$ ATM-CC/SEC FOR HELIUM.
2) ASSEMBLY TO BE CLEANED, AND PACKAGED SO AS TO ASSURE NO CONTAMINATION FROM FOREIGN MATERIALS, METAL CHIPS OR OTHER CONTAMINATES. CLEANING PROCEDURE TO BE APPROVED BY FERMILAB.
3) ALL DESIGN, ASSEMBLY, AND HANDLING IS TO CONFORM TO STANDARD ULTRA HIGH VACUUM PRACTICES
4) ALL ELECTRON BEAM WELDING, ACID ETCHING, CLEANLINESS, AND HANDLING PROCEDURES ARE DETAILED IN DESY SPECIFICATION MHF-SL 1-1999 AND MUST BE FOLLOWED.
5) WELD PREP TO MATCH WALL THICKNESS AT DISCRETION OF MANUFACTURER

NOTES:

1) FINAL LENGTH AFTER MACHINING OPERATION DETAILED ON DRAWING NUMBER MD-439179

2) ITEM #2 MUST BE CONCENTRIC TO ITEM #1 TO WITHIN Ø0.2

3) ITEM #3 MUST BE CONCENTRIC TO ITEM #1 TO WITHIN 0.2

ITEM	PART NO.	DESCRIPTION OR SIZE	QTY.
3	MD-439154	LONG VERSION FORMTEIL	1
2	MB-439150	HOM SPOOL PIECE	1
1	MD-439165	HOM LONG VERSION FORMTEIL HOUSING	1

PARTS LIST

UNLESS OTHERWISE SPECIFIED			ORIGINATOR	DESY	
.X	.XX	ANGLE	DRAWN	E.PIRTLE	18-APR-2005
± - -	± 0.10	± 1°	CHECKED	D.MITCHELL	16-SEP-2005
			APPROVED	M.FOLEY	16-SEP-2005

1. BREAK ALL SHARP EDGES 0.4mm/.015in MAX.
2. DO NOT SCALE DRAWING.
3. DIMENSIONS BASED UPON ASME Y14.5M-1994
4. MAX. ALL MACH. SURFACES N6
5. DRAWING UNITS: METRIC

USED ON: MD-439176

MATERIAL: SEE PARTS LIST

FERMI NATIONAL ACCELERATOR LABORATORY
UNITED STATES DEPARTMENT OF ENERGY

DESY 1.3GHZ TESLA RF CAVITY LONG END HOM ASSEMBLY

SCALE	DRAWING NUMBER	SHEET	REV
3:1	4904.010-MD-439174	1 OF 1	

CREATED WITH : Ideas11NXSeries | GROUP: ACCELERATOR MECH. SUPPT.

THIS DESIGN IS THE INTELLECTUAL PROPERTY OF DESY ACCORDING TO DIN 34 / ISO 16016. THIS DRAWING HAS BEEN REDRAWN WITH DESY'S PERMISSION FOR FABRICATION PURPOSES WITHIN THE USA AND IS TO BE USED EXCLUSIVELY WITHIN FERMILAB. USAGE OUTSIDE OF FERMILAB MUST BE APPROVED BY DESY.

FOR REFERENCE ONLY
NOT FOR FABRICATION
MAY NOT BE CURRENT

REV	DESCRIPTION	DRAWN	DATE
		APPROVED	DATE

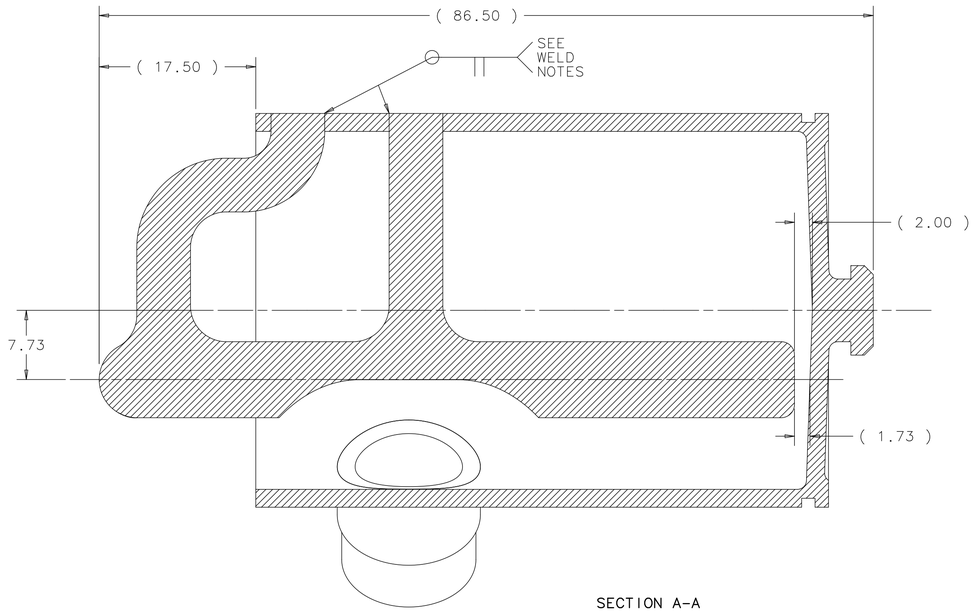

SECTION A-A

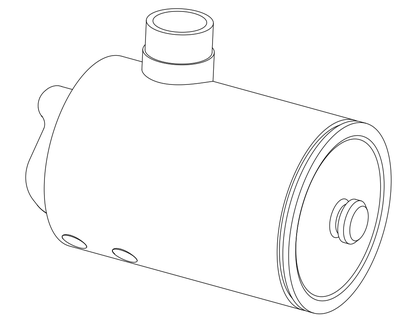

WELDING NOTES:
1) ASSEMBLY TO BE VACUUM TIGHT.
NO LEAK SHALL BE DETECTABLE ON THE MOST SENSITIVE SCALE OF A HELIUM MASS SPECTROMETER LEAK DETECTOR WITH A MINIMUM SENSITIVITY OF $2x10^{-10}$ ATM-CC/SEC FOR HELIUM.
2) ASSEMBLY TO BE CLEANED, AND PACKAGED SO AS TO ASSURE NO CONTAMINATION FROM FOREIGN MATERIALS, METAL CHIPS OR OTHER CONTAMINATES. CLEANING PROCEDURE TO BE APPROVED BY FERMILAB.
3) ALL DESIGN, ASSEMBLY, AND HANDLING IS TO CONFORM TO STANDARD ULTRA HIGH VACUUM PRACTICES
4) ALL ELECTRON BEAM WELDING, ACID ETCHING, CLEANLINESS, AND HANDLING PROCEDURES ARE DETAILED IN DESY SPECIFICATION MHF-SL 1-1999 AND MUST BE FOLLOWED.
5) WELD PREP TO MATCH WALL THICKNESS AT DISCRETION OF MANUFACTURER

NOTES:

1) FINAL LENGTH AFTER MACHINING OPERATION DETAILED ON DRAWING NUMBER MD-439180

2) ITEM #2 MUST BE CONCENTRIC TO ITEM #1 TO WITHIN ⌀0.2

3) ITEM #3 MUST BE CONCENTRIC TO ITEM #1 TO WITHIN 0.2

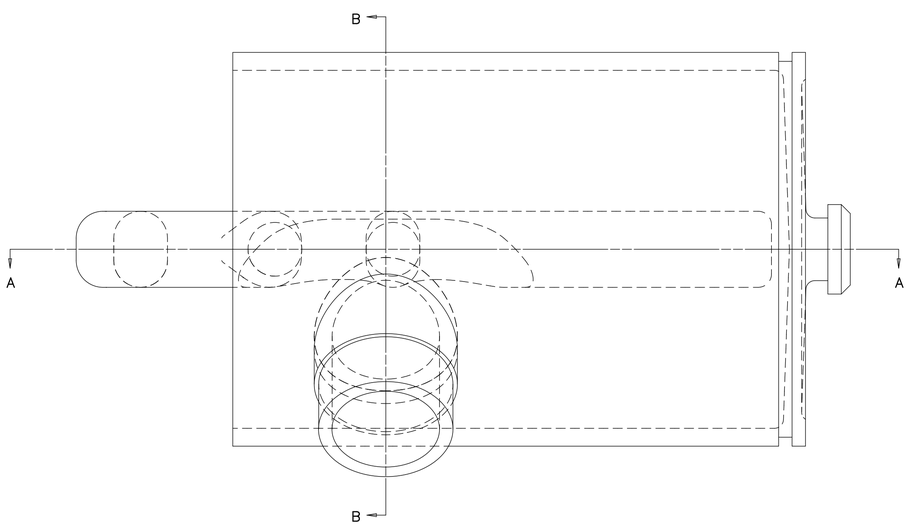

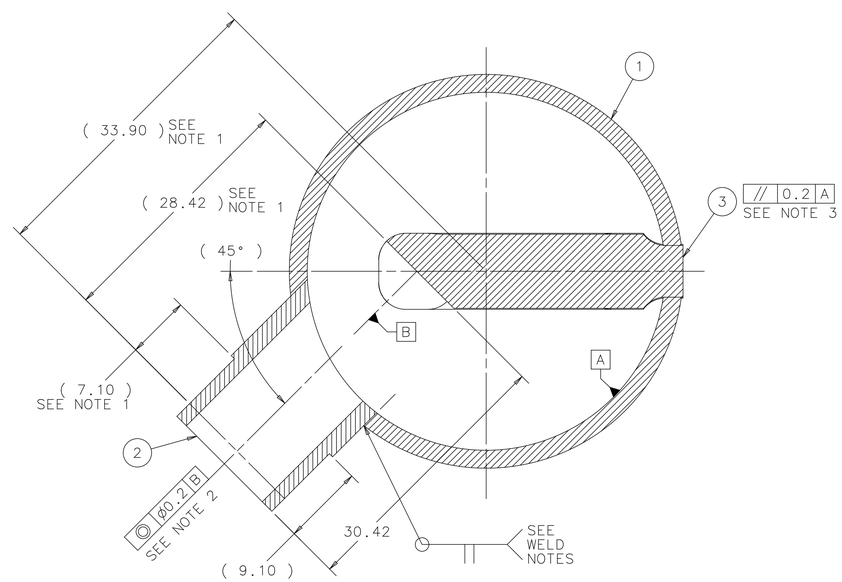

SECTION B-B

ITEM	PART NO.	DESCRIPTION OR SIZE	QTY.
3	MD-439162	SHORT VERSION FORMTEIL	1
2	MB-439150	HOM SPOOL PIECE	1
1	MD-439166	SHORT VERSION HOM FORMTEIL HOUSING	1

PARTS LIST

UNLESS OTHERWISE SPECIFIED			ORIGINATOR	DESY	
.X	.XX	ANGLE	DRAWN	E.PIRTLE	18-APR-2005
± - -	± 0.10	± 1°	CHECKED	D.MITCHELL	16-SEP-2005
			APPROVED	M.FOLEY	20-SEP-2005

1. BREAK ALL SHARP EDGES 0.40 MAX.
2. DO NOT SCALE DRAWING.
3. DIMENSIONS BASED UPON ASME Y14.5M-1994
4. MAX. ALL MACH. SURFACES N6
5. DRAWING UNITS: METRIC, mm

USED ON: MD-439177

MATERIAL: SEE PARTS LIST

FERMI NATIONAL ACCELERATOR LABORATORY
UNITED STATES DEPARTMENT OF ENERGY

DESY 1.3GHZ TESLA RF CAVITY SHORT END HOM ASSEMBLY

SCALE	DRAWING NUMBER	SHEET	REV
3:1	4904.010-MD-439175	1 OF 1	

CREATED WITH : Ideas11NXSeries | GROUP: ACCELERATOR MECH. SUPPT.

THIS DESIGN IS THE INTELLECTUAL PROPERTY OF DESY ACCORDING TO DIN 34 / ISO 16016. THIS DRAWING HAS BEEN REDRAWN WITH DESY'S PERMISSION FOR FABRICATION PURPOSES WITHIN THE USA AND IS TO BE USED EXCLUSIVELY WITHIN FERMILAB. USAGE OUTSIDE OF FERMILAB MUST BE APPROVED BY DESY.

FOR REFERENCE ONLY
NOT FOR FABRICATION
MAY NOT BE CURRENT

REV	DESCRIPTION	DRAWN	DATE
		APPROVED	DATE
A	CHANGED LENGTH	E.PIRTLE	13-APR-2006
		M.FOLEY	17-APR-2006

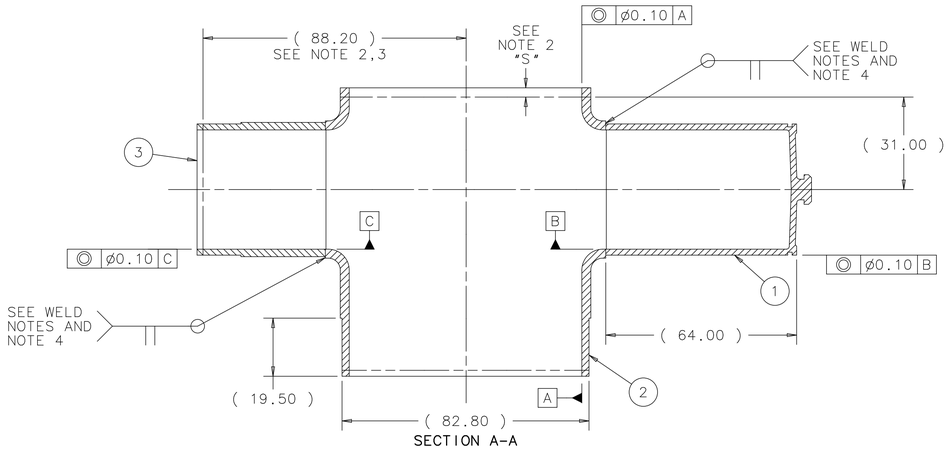

SECTION A-A

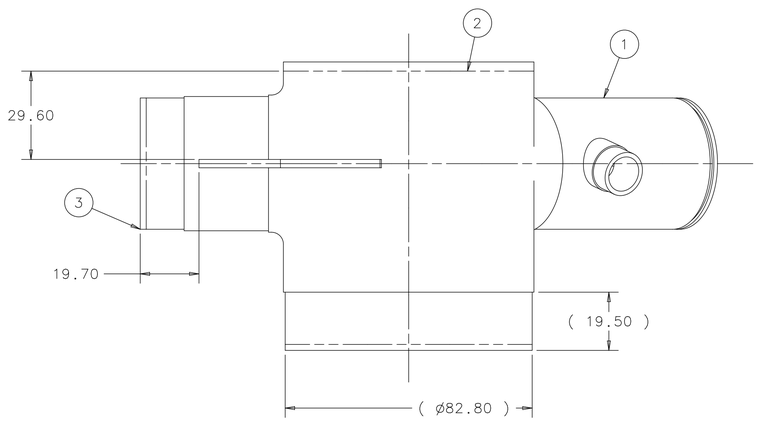

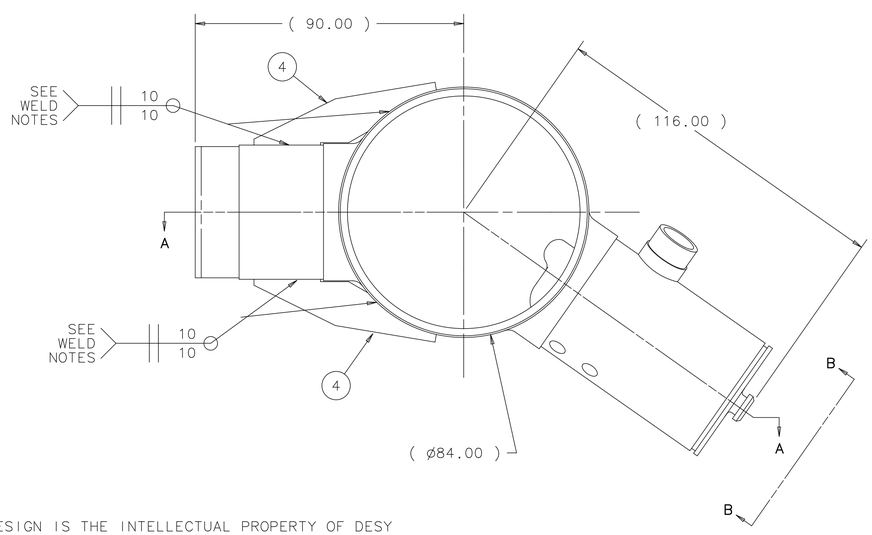

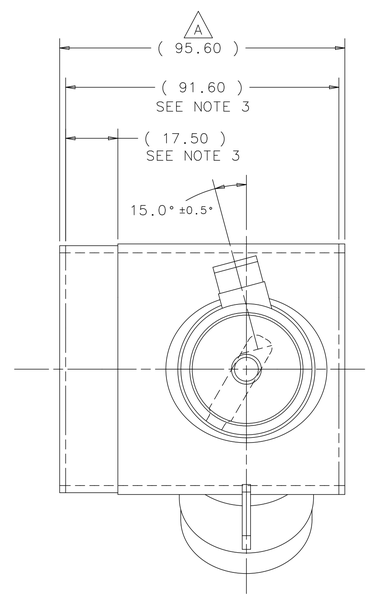

VIEW B-B

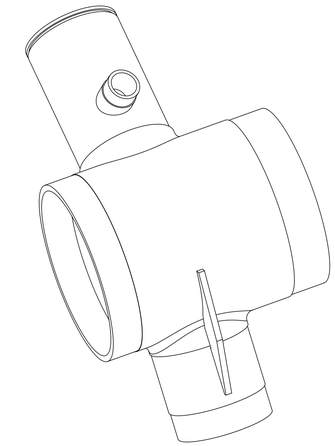

WELDING NOTES:

1) ASSEMBLY TO BE VACUUM TIGHT.
   NO LEAK SHALL BE DETECTABLE ON THE MOST SENSITIVE SCALE OF A HELIUM MASS SPECTROMETER LEAK DETECTOR WITH A MINIMUM SENSITIVITY OF 2×10^{-10} ATM-CC/SEC FOR HELIUM.
2) ASSEMBLY TO BE CLEANED, AND PACKAGED SO AS TO ASSURE NO CONTAMINATION FROM FOREIGN MATERIALS, METAL CHIPS OR OTHER CONTAMINATES. CLEANING PROCEDURE TO BE APPROVED BY FERMILAB.
3) ALL DESIGN, ASSEMBLY, AND HANDLING IS TO CONFORM TO STANDARD ULTRA HIGH VACUUM PRACTICES
4) ALL ELECTRON BEAM WELDING, ACID ETCHING, CLEANLINESS, AND HANDLING PROCEDURES ARE DETAILED IN DESY SPECIFICATION MHF-SL 1-1999 AND MUST BE FOLLOWED.

NOTES:

1) DEFINITION OF FORM AND TOLERANCES CONCERNING WELD JOINT PREPARATION AT THE IRIS AND THE EQUATOR TO BE COORDINATED BETWEEN MANUFACTURERS AND FNAL
2) SUPPLEMENT FOR WELD SHRINKAGE REFERRED TO IN PIECE PART DRAWINGS
3) FINAL LENGTH AFTER MACHINING OPERATION DETAILED ON DRAWING NUMBER MD-439180
4) WELD PREP JOINTS TO MATCH WALL THICKNESS AT DISCRETION OF MANUFACTURER

ITEM	PART NO.	DESCRIPTION OR SIZE	QTY.
4	MB-439169	COUPLER RIB	2
3	MB-439171	COUPLER SPOOL PIECE	1
2	MD-439161	SHORT VERSION END TUBE	1
1	MD-439175	SHORT VERSION HOM ASSEMBLY	1

PARTS LIST

UNLESS OTHERWISE SPECIFIED			ORIGINATOR	DESY	
.X	.XX	ANGLE	DRAWN	E.PIRTLE	18-APR-2005
± - -	± 0.20	± 1°	CHECKED	D.MITCHELL	20-SEP-2005
			APPROVED	M.FOLEY	16-SEP-2005

1. BREAK ALL SHARP EDGES 0.40 MAX.
2. DO NOT SCALE DRAWING.
3. DIMENSIONS BASED UPON ASME Y14.5M-1994
4. MAX. ALL MACH. SURFACES N7
5. DRAWING UNITS: METRIC, mm

USED ON: MD-439180

MATERIAL: SEE PARTS LIST

FERMI NATIONAL ACCELERATOR LABORATORY
UNITED STATES DEPARTMENT OF ENERGY

DESY 1.3GHZ TESLA RF CAVITY SHORT END TUBE WELDMENT

SCALE	DRAWING NUMBER	SHEET	REV
1:1	4904.010-MD-439177	1 OF 1	A

CREATED WITH : Ideas11NXSeries | GROUP: ACCELERATOR MECH. SUPPT.

THIS DESIGN IS THE INTELLECTUAL PROPERTY OF DESY ACCORDING TO DIN 34 / ISO 16016. THIS DRAWING HAS BEEN REDRAWN WITH DESY'S PERMISSION FOR FABRICATION PURPOSES WITHIN THE USA AND IS TO BE USED EXCLUSIVELY WITHIN FERMILAB. USAGE OUTSIDE OF FERMILAB MUST BE APPROVED BY DESY.

FOR REFERENCE ONLY
NOT FOR FABRICATION
MAY NOT BE CURRENT

REV	DESCRIPTION	DRAWN	DATE
		APPROVED	DATE
A	CHANGED VALUE FROM 71.00 TO 70.00 ADDED DIMENSION D	E.PIRTLE	24-MAR-2006
		M.FOLEY	06-APR-2006
B	ADDED DRAWING IN USED ON IN TITLE BLOCK	E.PIRTLE	28-APR-2006
		M.FOLEY	28-APR-2006

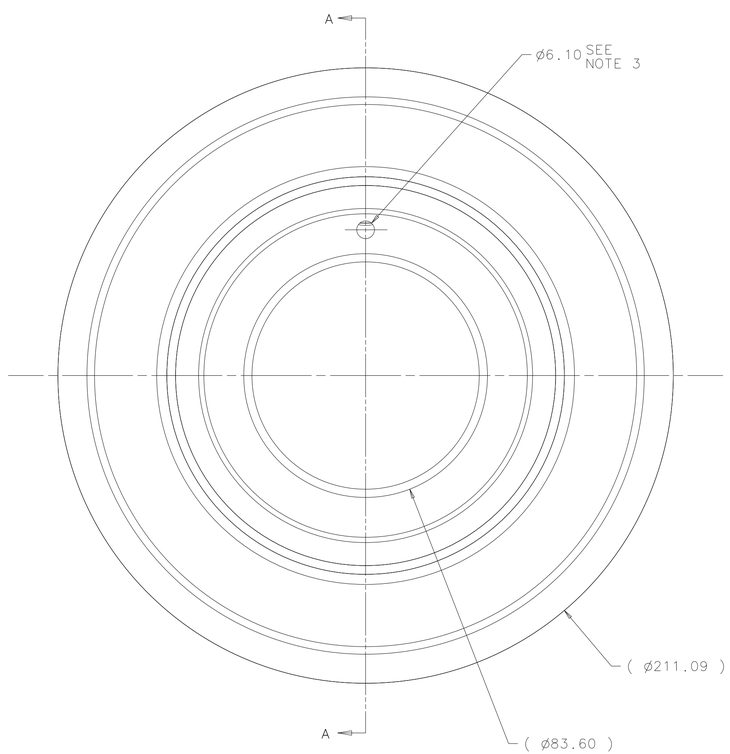

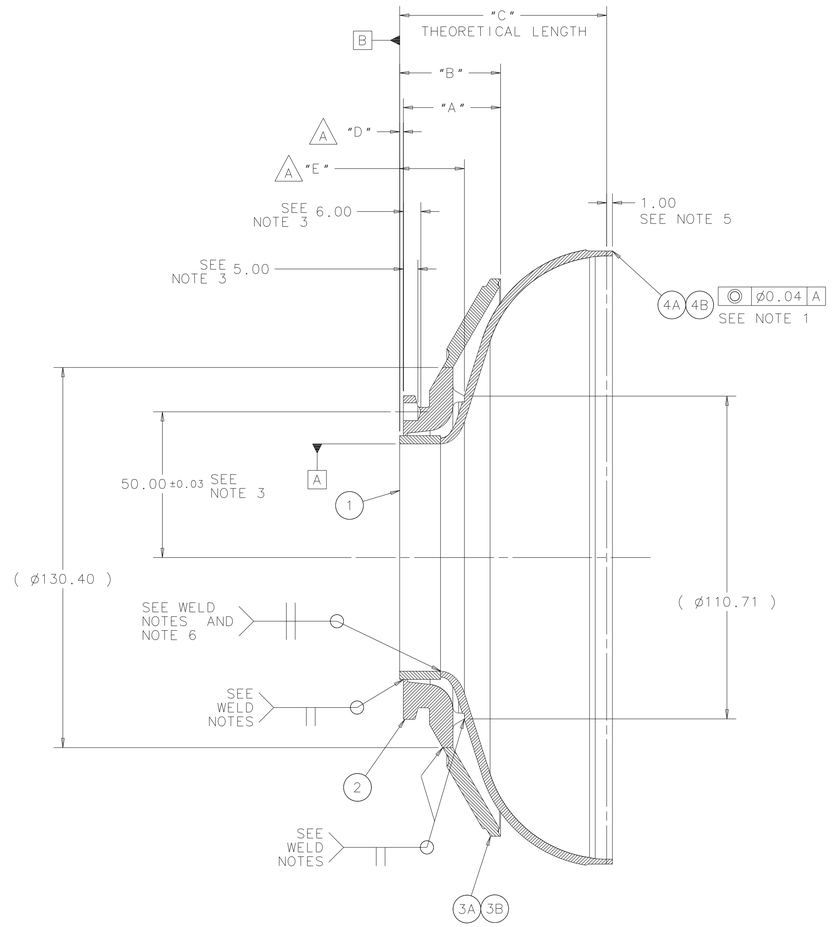

SECTION A-A

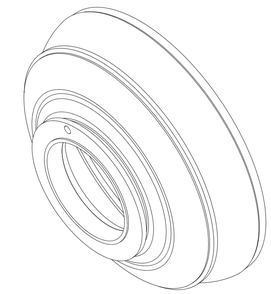

WELDING NOTES:
1) ASSEMBLY TO BE VACUUM TIGHT. NO LEAK SHALL BE DETECTABLE ON THE MOST SENSITIVE SCALE OF A HELIUM MASS SPECTROMETER LEAK DETECTOR WITH A MINIMUM SENSITIVITY OF 2×10^{-10} ATM-CC/SEC FOR HELIUM.
2) ASSEMBLY TO BE CLEANED, AND PACKAGED SO AS TO ASSURE NO CONTAMINATION FROM FOREIGN MATERIALS, METAL CHIPS OR OTHER CONTAMINATES. CLEANING PROCEDURE TO BE APPROVED BY FERMILAB.
3) ALL DESIGN, ASSEMBLY, AND HANDLING IS TO CONFORM TO STANDARD ULTRA HIGH VACUUM PRACTICES
4) ALL ELECTRON BEAM WELDING, ACID ETCHING, CLEANLINESS, AND HANDLING PROCEDURES ARE DETAILED IN DESY SPECIFICATION MHF-SL 1-1999 AND MUST BE FOLLOWED.

NOTES:

1) ALL PARTS TO BE CONCENTRIC WITHIN ±Ø0.04mm
2) AFTER EB-WELDING ALL SEAMS, MACHINE CONTOUR AS PER DRAWINGS MD-439167 AND MD-439152 FOR THE LONG ASSEMBLY AND DRAWINGS MD-439168 AND MD-439152 FOR THE SHORT ASSEMBLY
3) HOLE IS TO BE MADE IN LONG VERSION ONLY
4) DO NOT BREAK EDGES ON END CELL
5) ADDITIONAL MATERIAL NEEDED FOR CELL TUNING PLUS ALLOWANCE FOR E-BEAM WELD SHRINKAGE. FINAL SURFACE TO BE MACHINED UNTIL TUNED.
6) WELD PREP JOINT TO MATCH WALL THICKNESS AT THE DISCRETION OF THE MANUFACTURER -- DUAL PASS WELD -- ENSURE OVERLAP

LONG VERSION SHOWN IN THIS DRAWING

	LONG	SHORT
A	33.36	35.90
B	34.60	37.80
C	71.00	70.00
D	1.24	1.90
E	22.19	22.85

A
A

ITEM	PART NO.	DESCRIPTION OR SIZE	QTY.
4B	MD-439163	RF HALF CELL (SHORT VERSION)	1
4A	MD-439155	RF HALF CELL (LONG VERSION)	1
3B	MD-439168	END CAP DISK (SHORT VERSION)	1
3A	MD-439167	END CAP DISK (LONG VERSION)	1
2	MD-439152	END CAP FLANGE	1
1	MB-439164	END TUBE SPOOL PIECE	1

PARTS LIST

UNLESS OTHERWISE SPECIFIED			ORIGINATOR	DESY	
.X	.XX	ANGLE	DRAWN	E.PIRTLE	18-APR-2005
± - -	± 0.20	± 1°	CHECKED	D.MITCHELL	16-SEP-2005
1. BREAK ALL SHARP EDGES 0.40 MAX. 2. DO NOT SCALE DRAWING. 3. DIMENSIONS BASED UPON ASME Y14.5M-1994 4. MAX. ALL MACH. SURFACES N7 5. DRAWING UNITS: METRIC, mm			APPROVED	M.FOLEY	20-SEP-2005
			USED ON	MD-439179 & MD-439180 MD-440003 & MD-439180	
			MATERIAL	SEE PARTS LIST	

FERMI NATIONAL ACCELERATOR LABORATORY
UNITED STATES DEPARTMENT OF ENERGY

DESY 1.3GHZ TESLA
RF CAVITY
LONG AND SHORT END DISK WELDMENT

SCALE	DRAWING NUMBER	SHEET	REV
3:4	4904.010-MD-439178	1 OF 1	B

CREATED WITH : Ideas11NXSeries | GROUP: ACCELERATOR MECH. SUPPT.

NOTICE: IMAGE OBTAINED FROM FERMILAB WEB SITE

This information is provided for REFERENCE use only. Not for MANUFACTURE, or DESIGN INFORMATION. All information contained in this document represents work sponsored by an agency of the U.S. Government. Neither the U.S. Government nor any agency thereof, nor Universities Research Association, Inc., nor any of their employees or officers, makes any warranty, express or implied, or assumes any legal liability or responsibility for the accuracy, completeness, or usefulness of any information, apparatus, product, or process disclosed, or represents that its use would not infringe privately owned rights.

THIS DESIGN IS THE INTELLECTUAL PROPERTY OF DESY ACCORDING TO DIN 34 / ISO 16016. THIS DRAWING HAS BEEN REDRAWN WITH DESY'S PERMISSION FOR FABRICATION PURPOSES WITHIN THE USA AND IS TO BE USED EXCLUSIVELY WITHIN FERMILAB. USAGE OUTSIDE OF FERMILAB MUST BE APPROVED BY DESY.

REV	DESCRIPTION	DRAWN	DATE
		APPROVED	DATE
A	ADDED EB WELD DEPTH NOTE	E.PIRTLE	31-JAN-2006
		M.FOLEY	31-JAN-2006
B	CHANGED LENGTH	E.PIRTLE	05-APR-2006
		M.FOLEY	06-APR-2006
C	ADDED DRAWING IN USED ON IN TITLE BLOCK	E.PIRTLE	26-APR-2006
		M.FOLEY	26-APR-2006
D	ADDED PART 6	E.PIRTLE	19-DEC-2008
		M.FOLEY	06-JAN-2008

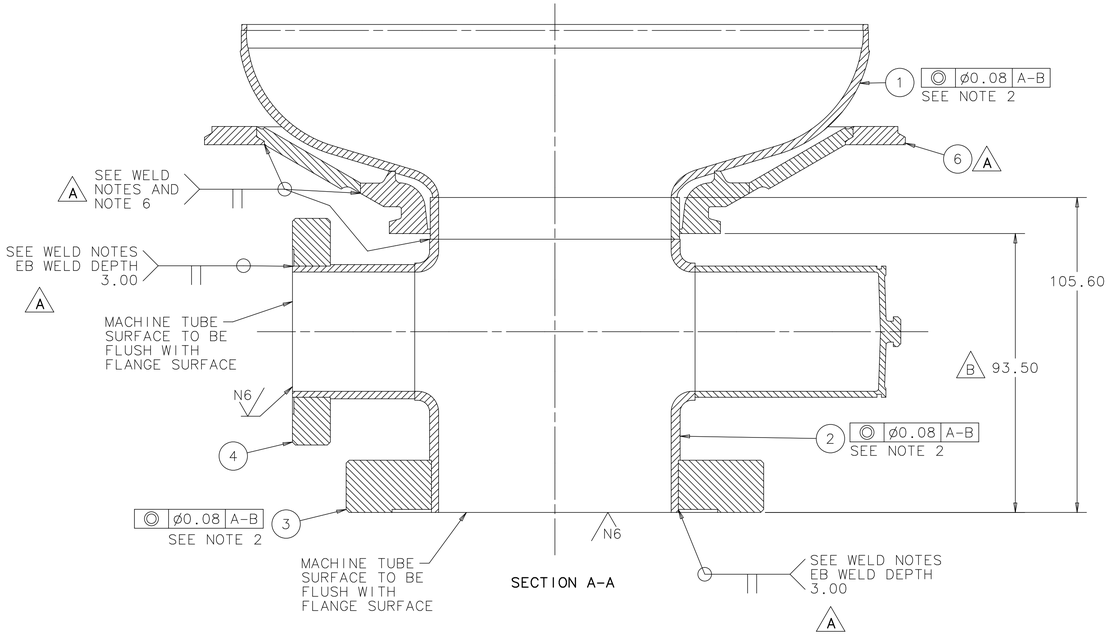

SECTION A-A

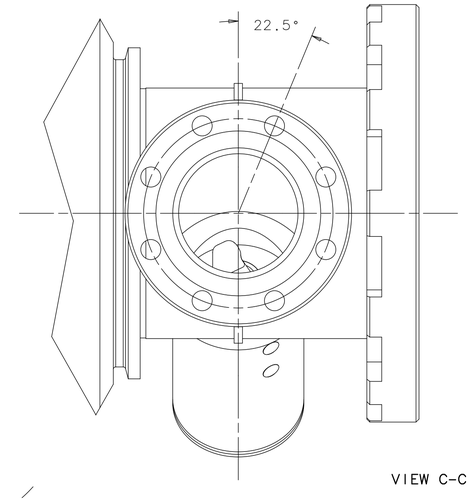

VIEW C-C

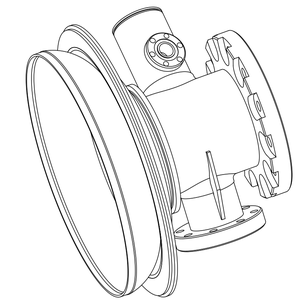

WELDING NOTES:
1) ASSEMBLY TO BE VACUUM TIGHT.
NO LEAK SHALL BE DETECTABLE ON THE MOST SENSITIVE SCALE OF A HELIUM MASS SPECTROMETER LEAK DETECTOR WITH A MINIMUM SENSITIVITY OF $2x10^{-10}$ ATM-CC/SEC FOR HELIUM.
2) ASSEMBLY TO BE CLEANED, AND PACKAGED SO AS TO ASSURE NO CONTAMINATION FROM FOREIGN MATERIALS, METAL CHIPS OR OTHER CONTAMINATES. CLEANING PROCEDURE TO BE APPROVED BY FERMILAB.
3) ALL DESIGN, ASSEMBLY, AND HANDLING IS TO CONFORM TO STANDARD ULTRA HIGH VACUUM PRACTICES
4) ALL ELECTRON BEAM WELDING, ACID ETCHING, CLEANLINESS, AND HANDLING PROCEDURES ARE DETAILED IN DESY SPECIFICATION MHF-SL 1-1999 AND MUST BE FOLLOWED.

NOTES:

1) DIMENSIONS L1 AND L2 ARE DEPENDENT ON A FREQUENCY MEASUREMENT. HALF CELL EQUATOR IS TO BE FINISHED TO FNAL SPECIFICATIONS RELATED TO SAID MEASUREMENT ALLOWING ADDITIONAL MATERIAL FOR WELD SHRINKAGE "S".

2) SEALING SURFACE MUST BE FREE OF SCRATCHES WITH NO RADIAL SCORING. SURFACE MUST BE FREE OF DAMAGES.

3) ADDITIONAL MATERIAL NEEDED FOR CELL TUNING PLUS ALLOWANCE FOR E-BEAM WELD SHRINKAGE. FINAL SURFACE TO BE MACHINED UNTIL TUNED.

4) ALL PARTS ARE TO BE CONCENTRIC WITHIN ø0.08mm ALONG DATUM A AND B

5) DO NOT BREAK EDGES ON END CELL

6) DUAL PASS WELD -- ENSURE OVERLAP

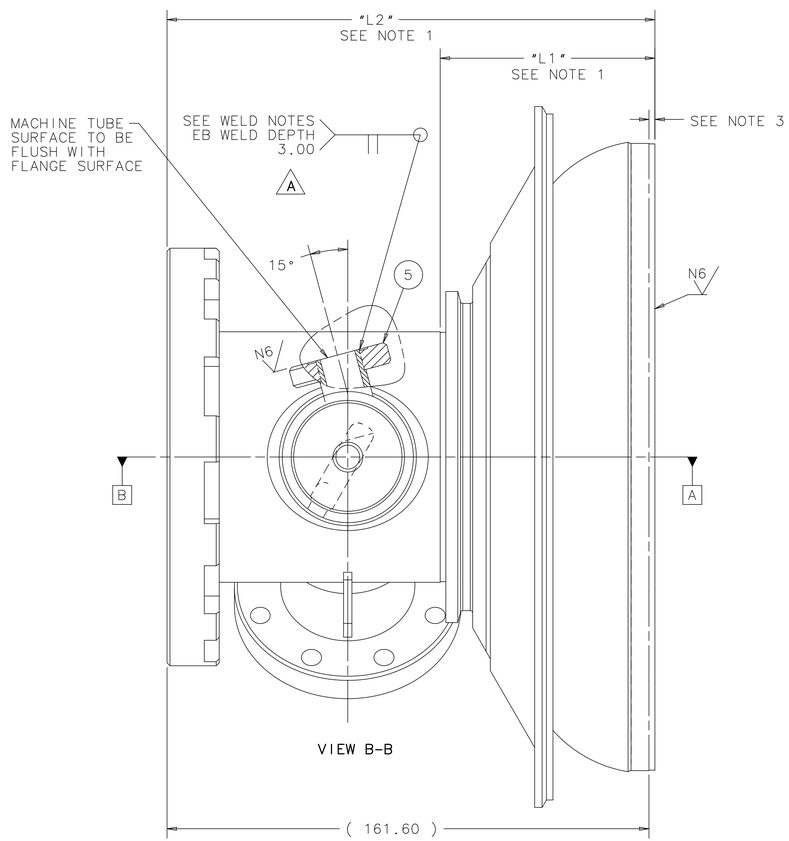

VIEW B-B

ITEM	PART NO.	DESCRIPTION OR SIZE	QTY.
6	MB-459457	TRANSITION RING MC END	1
5	MB-439157	NW12 HOM FLANGE	1
4	MB-439158	NW40 COUPLER FLANGE	1
3	MD-439159	NW78 BEAM FLANGE	1
2	MD-439177	END TUBE WELDMENT (SHORT VERSION)	1
1	MD-439178	END DISK WELDMENT (SHORT VERSION)	1

PARTS LIST

UNLESS OTHERWISE SPECIFIED			ORIGINATOR	DESY	
.X	.XX	ANGLE	DRAWN	E.PIRTLE	18-APR-2005
± - -	± 0.20	±0.5°	CHECKED	D.MITCHELL	16-SEP-2005
			APPROVED	M.FOLEY	20-SEP-2005

1. BREAK ALL SHARP EDGES 0.40 MAX.
2. DO NOT SCALE DRAWING.
3. DIMENSIONS BASED UPON ASME Y14.5M-1994
4. MAX. ALL MACH. SURFACES N8
5. DRAWING UNITS: METRIC

USED ON: MD-439181, MD-440004

MATERIAL: SEE PARTS LIST

FERMI NATIONAL ACCELERATOR LABORATORY
UNITED STATES DEPARTMENT OF ENERGY

DESY 1.3GHZ TESLA RF CAVITY SHORT END HALF CELL ASSEMBLY

SCALE	DRAWING NUMBER	SHEET	REV
1:1	4904.010-MD-439180	1 OF 1	D

CREATED WITH : Ideas12NXSeries GROUP: ACCELERATOR MECH. SUPPT.

THIS DESIGN IS THE INTELLECTUAL PROPERTY OF DESY ACCORDING TO DIN 34 / ISO 16016. THIS DRAWING HAS BEEN REDRAWN WITH DESY'S PERMISSION FOR FABRICATION PURPOSES WITHIN THE USA AND IS TO BE USED EXCLUSIVELY WITHIN FERMILAB. USAGE OUTSIDE OF FERMILAB MUST BE APPROVED BY DESY.

REV	DESCRIPTION	DRAWN	DATE
		APPROVED	DATE

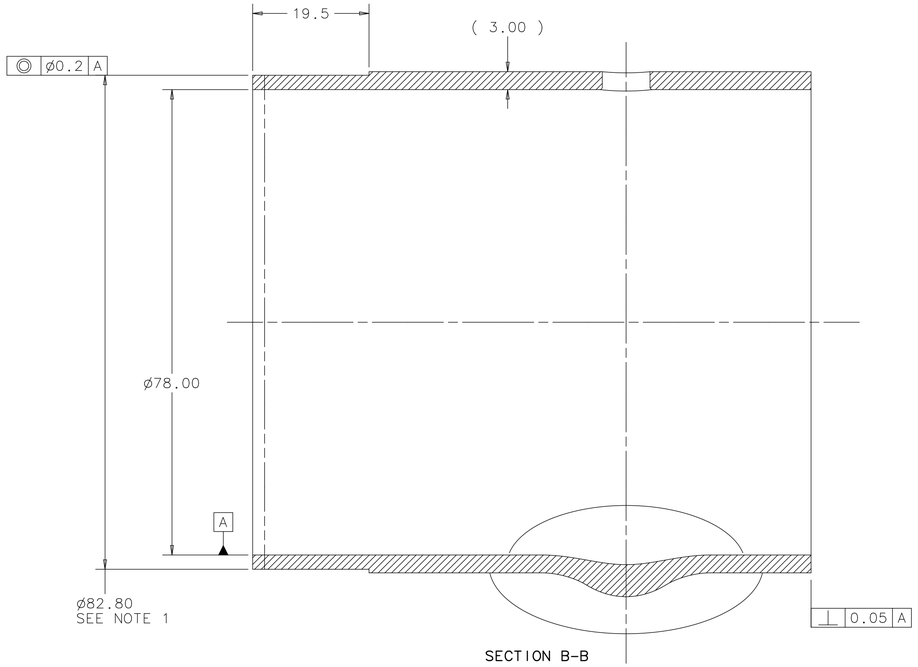

SECTION B-B

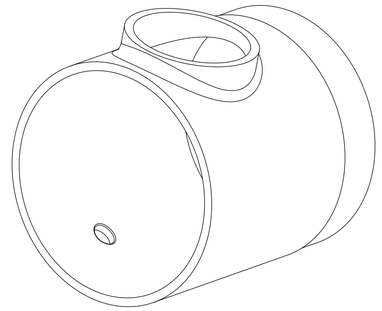

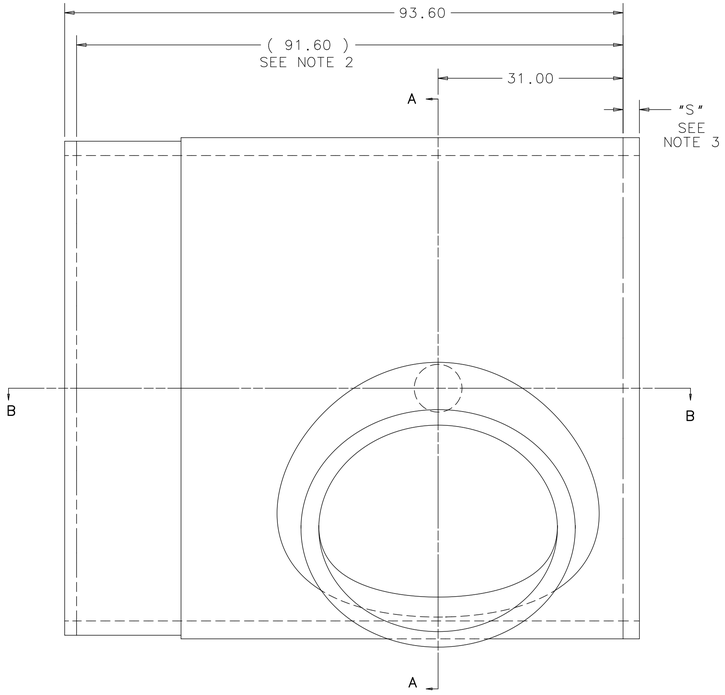

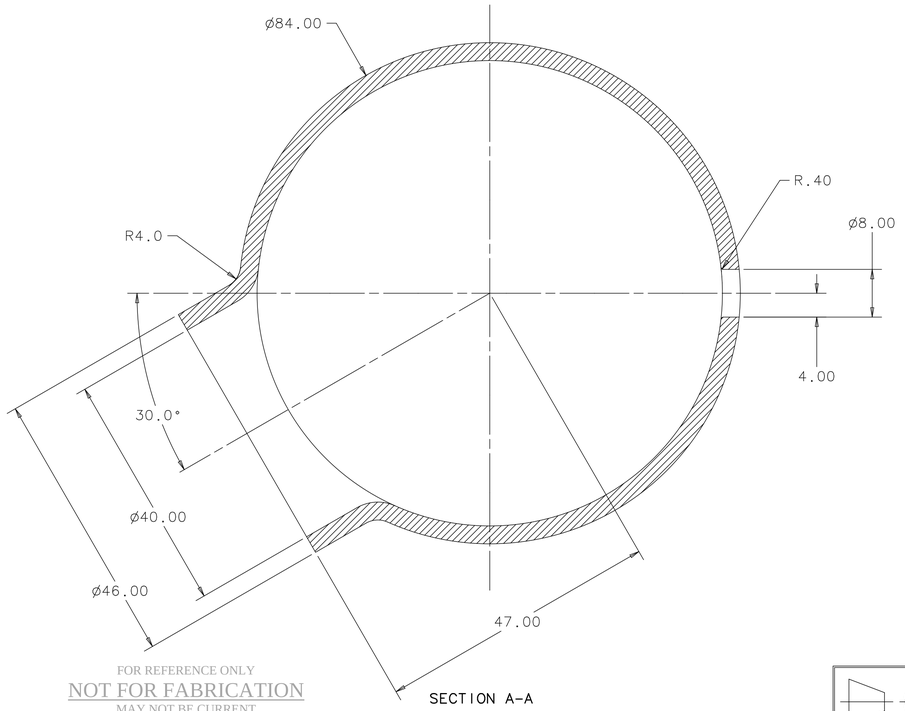

SECTION A-A

NOTES:

1) DIMENSION COORESPONDS WITH PART NUMBER MD-439159. TOLERANCE IS TO BE COORDINATED BETWEEN MANUFACTURERS AND EB-WELDERS

2) FINAL LENGTH AFTER MACHINING OPERATION DETAILED ON DRAWING NUMBER MD-440003

3) SUPPLEMENT FOR WELD SHRINKAGE TO BE DETERMINED BY EB-WELDERS

UNLESS OTHERWISE SPECIFIED			ORIGINATOR	M.FOLEY	17-OCT-2005
.X	.XX	ANGLE	DRAWN	E.PIRTLE	17-OCT-2005
± 0.2	± .010	±0.5°	CHECKED	M.FOLEY	25-OCT-2005
1. BREAK ALL SHARP EDGES 0.40 MAX. 2. DO NOT SCALE DRAWING. 3. DIMENSIONS BASED UPON ASME Y14.5M-1994 4. MAX. ALL MACH. SURFACES N7 5. DRAWING UNITS: METRIC, mm			APPROVED	M.FOLEY	25-OCT-2005
			USED ON	MD-440002	
			MATERIAL	RRR 300 NIOBIUM	

FERMI NATIONAL ACCELERATOR LABORATORY
UNITED STATES DEPARTMENT OF ENERGY

FNAL 1.3GHZ TESLA
RF CAVITY
LONG END TUBE

SCALE	DRAWING NUMBER	SHEET	REV
2:1	4904.010-MD-440001	1 OF 1	

CREATED WITH : Ideas11NXSeries | GROUP: ACCELERATOR MECH. SUPPT.

FOR REFERENCE ONLY
NOT FOR FABRICATION
MAY NOT BE CURRENT

Created: 09:54:58 on 09-05-07 (D-M-Y) By: dmitchel State: 3-RELEASED

REV	DESCRIPTION	DRAWN	DATE
		APPROVED	DATE
A	ADDED REFERENCE DIMENSION	E.PIRTLE	28-APR-2006
		M.FOLEY	28-APR-2006
A	CHANGED REFERANCE DIMENSION 30.80 TO 31.00	E.PIRTLE	17-MAY-2006
		M.FOLEY	18-MAY-2006

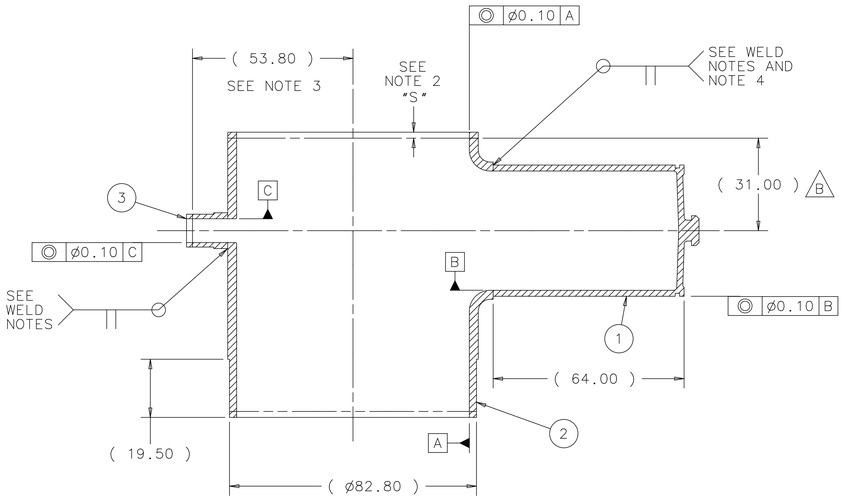

SECTION A-A

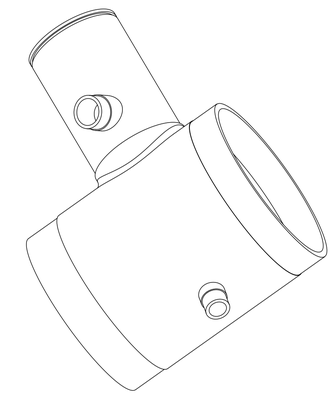

WELDING NOTES:
1) ASSEMBLY TO BE VACUUM TIGHT.
NO LEAK SHALL BE DETECTABLE ON THE MOST SENSITIVE SCALE OF A HELIUM MASS SPECTROMETER LEAK DETECTOR WITH A MINIMUM SENSITIVITY OF $2x10^{-10}$ ATM-CC/SEC FOR HELIUM.
2) ASSEMBLY TO BE CLEANED, AND PACKAGED SO AS TO ASSURE NO CONTAMINATION FROM FOREIGN MATERIALS, METAL CHIPS OR OTHER CONTAMINATES. CLEANING PROCEDURE TO BE APPROVED BY FERMILAB.
3) ALL DESIGN, ASSEMBLY, AND HANDLING IS TO CONFORM TO STANDARD ULTRA HIGH VACUUM PRACTICES
4) ALL ELECTRON BEAM WELDING, ACID ETCHING, CLEANLINESS, AND HANDLING PROCEDURES ARE DETAILED IN DESY SPECIFICATION MHF-SL 1-1999 AND MUST BE FOLLOWED.

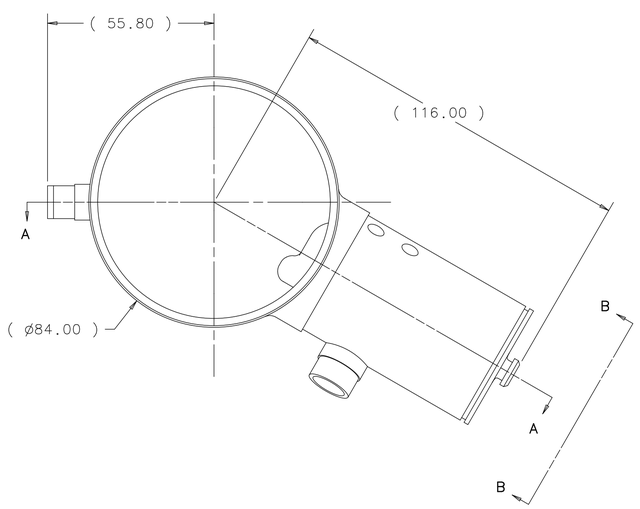

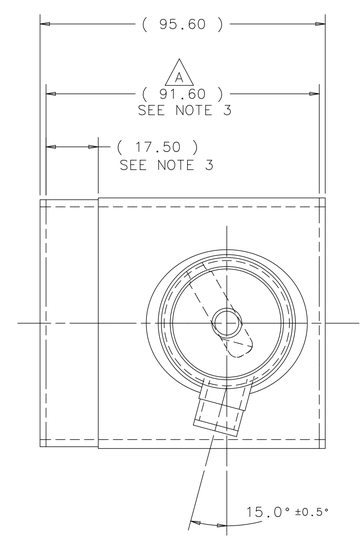

VIEW B-B

NOTES:

1) DEFINITION OF FORM AND TOLERANCES CONCERNING WELD JOINT PREPARATION AT THE IRIS AND THE EQUATOR TO BE COORDINATED BETWEEN MANUFACTURERS AND FNAL

2) SUPPLEMENT FOR WELD SHRINKAGE REFERRED TO IN PIECE PART DRAWINGS

3) FINAL LENGTH AFTER MACHINING OPERATION DETAILED ON DRAWING NUMBER MD-440003

4) WELD PREP JOINTS TO MATCH WALL THICKNESS AT DISCRETION OF MANUFACTURER

ITEM	PART NO.	DESCRIPTION OR SIZE	QTY.
3	MB-439170	DESY ANTENNA SPOOL PIECE	1
2	MD-440001	FNAL LONG VERSION END TUBE	1
1	MD-439174	DESY LONG VERSION HOM ASSEMBLY	1

PARTS LIST

UNLESS OTHERWISE SPECIFIED					
.X	.XX	ANGLE	ORIGINATOR	M.FOLEY	17-OCT-2005
± - -	± 0.20	± 1°	DRAWN	E.PIRTLE	17-OCT-2005
			CHECKED	M.FOLEY	25-OCT-2005
			APPROVED	M.FOLEY	25-OCT-2005

1. BREAK ALL SHARP EDGES 0.40 MAX.
2. DO NOT SCALE DRAWING.
3. DIMENSIONS BASED UPON ASME Y14.5M-1994
4. MAX. ALL MACH. SURFACES N7
5. DRAWING UNITS: METRIC, mm

USED ON: MD-440003

MATERIAL: SEE PARTS LIST

FERMI NATIONAL ACCELERATOR LABORATORY
UNITED STATES DEPARTMENT OF ENERGY

FNAL 1.3GHZ TESLA RF CAVITY LONG END TUBE WELDMENT

SCALE	DRAWING NUMBER	SHEET	REV
1:1	4904.010-MD-440002	1 OF 1	B

CREATED WITH : Ideas11NXSeries | GROUP: ACCELERATOR MECH. SUPPT.

PARTS OF THIS DESIGN ARE THE INTELLECTUAL PROPERTY OF DESY ACCORDING TO DIN 34 / ISO 16016. PARTS OF THIS DRAWING HAVE BEEN REDRAWN WITH DESY'S PERMISSION FOR FABRICATION PURPOSES WITHIN THE USA AND IS TO BE USED EXCLUSIVELY WITHIN FERMILAB. USAGE OUTSIDE OF FERMILAB MUST BE APPROVED BY DESY.

FOR REFERENCE ONLY
NOT FOR FABRICATION
MAY NOT BE CURRENT

REV	DESCRIPTION	DRAWN	DATE
		APPROVED	DATE
A	CHANGED LENGTH	E.PIRTLE	28-APR-2006
		M.FOLEY	28-APR-2006
B	ADDDED PART 6	E.PIRTLE	19-DEC-2008
		M.FOLEY	06-JAN-2008

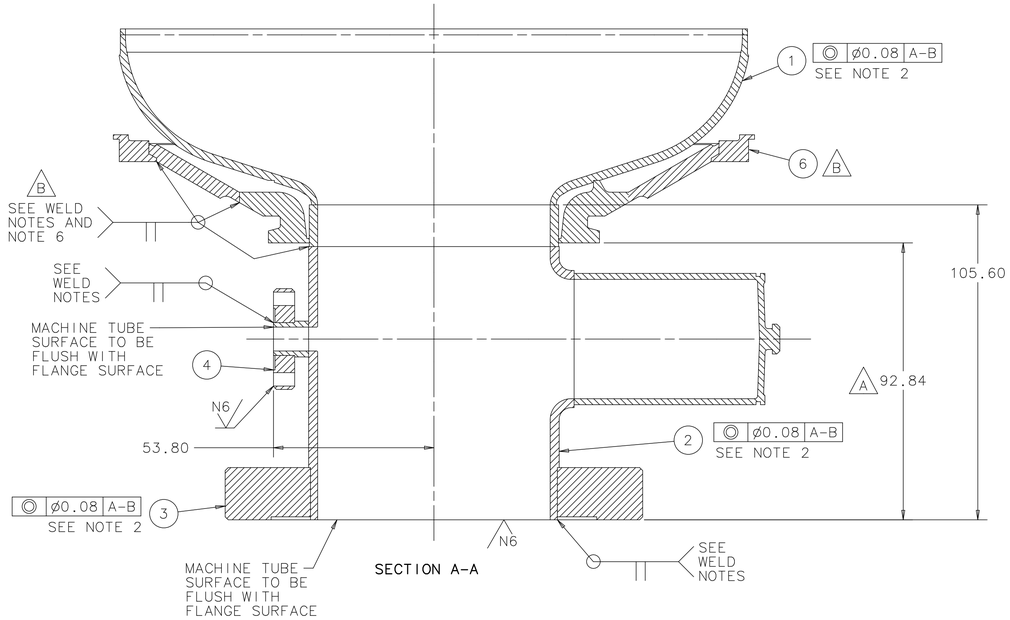

SECTION A-A

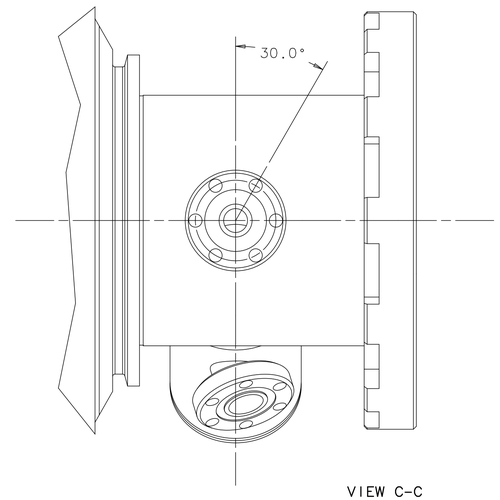

VIEW C-C

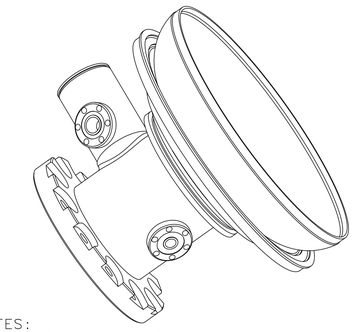

WELDING NOTES:
1) ASSEMBLY TO BE VACUUM TIGHT.
NO LEAK SHALL BE DETECTABLE ON THE MOST SENSITIVE SCALE OF A HELIUM MASS SPECTROMETER LEAK DETECTOR WITH A MINIMUM SENSITIVITY OF 2×10^{-10} ATM-CC/SEC FOR HELIUM.
2) ASSEMBLY TO BE CLEANED, AND PACKAGED SO AS TO ASSURE NO CONTAMINATION FROM FOREIGN MATERIALS, METAL CHIPS OR OTHER CONTAMINATES. CLEANING PROCEDURE TO BE APPROVED BY FERMILAB.
3) ALL DESIGN, ASSEMBLY, AND HANDLING IS TO CONFORM TO STANDARD ULTRA HIGH VACUUM PRACTICES
4) ALL ELECTRON BEAM WELDING, ACID ETCHING, CLEANLINESS, AND HANDLING PROCEDURES ARE DETAILED IN DESY SPECIFICATION MHF-SL 1-1999 AND MUST BE FOLLOWED.

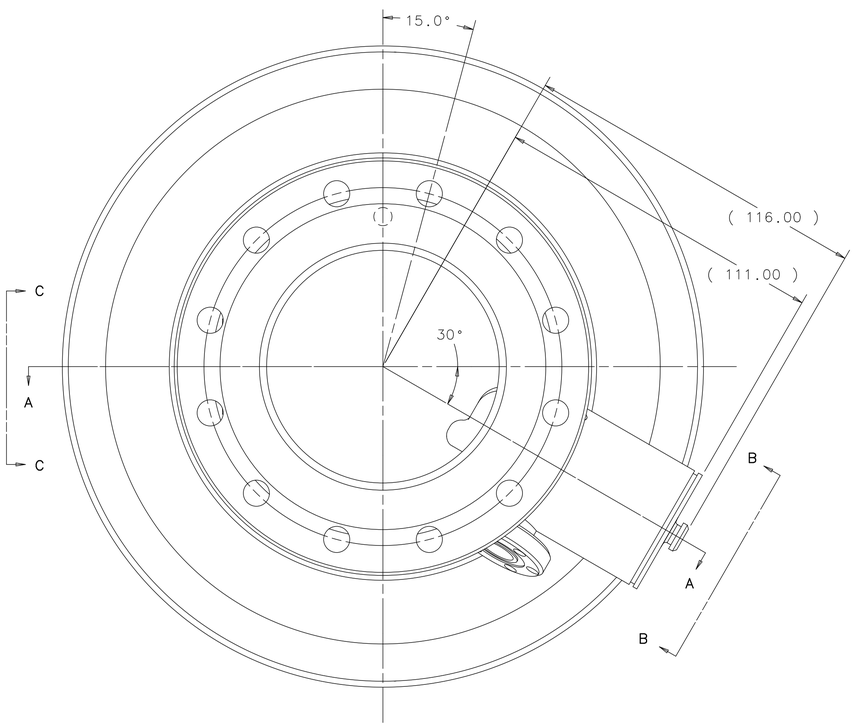

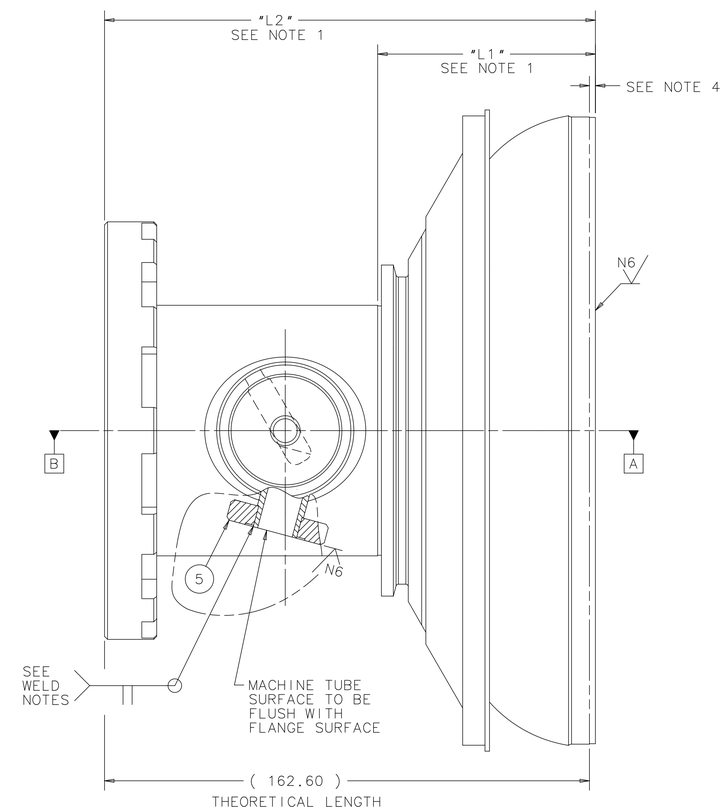

VIEW B-B

NOTES:

1) DIMENSIONS L1 AND L2 ARE DEPENDENT ON A FREQUENCY MEASUREMENT. HALF CELL EQUATOR IS TO BE FINISHED TO FNAL SPECIFICATIONS RELATED TO SAID MEASUREMENT ALLOWING ADDITIONAL MATERIAL FOR WELD SHRINKAGE "S".

2) ITEMS 1, 2, AND 3 ARE TO BE CONCENTRIC WITHIN ø0.08MM ALONG DATUM A AND B

3) SEALING SURFACE MUST BE FREE OF SCRATCHES WITH NO RADIAL SCORING. SURFACE MUST BE FREE OF DAMAGES.

4) ADDITIONAL MATERIAL NEEDED FOR CELL TUNING PLUS ALLOWANCE FOR E-BEAM WELD SHRINKAGE. FINAL SURFACE TO BE MACHINED UNTIL TUNED.

5) DO NOT BREAK EDGES ON END CELL

6) DUAL PASS WELD -- ENSURE OVERLAP

ITEM	PART NO.	DESCRIPTION OR SIZE	QTY.
6	MB-459459	TRANSITION RING FIELD PROBE END	1
5	MB-439157	DESY NW12 HOM FLANGE	1
4	MB-439160	DESY NW8 ANTENNA FLANGE	1
3	MD-439159	DESY NW78 BEAM FLANGE	1
2	MD-440002	FNAL END TUBE WELDMENT (LONG VERSION)	1
1	MD-439178	DESY END DISK FLANGE WELDMENT (LONG VERSION)	1

PARTS LIST

UNLESS OTHERWISE SPECIFIED			ORIGINATOR	M.FOLEY	17-OCT-2005
.X	.XX	ANGLE	DRAWN	E.PIRTLE	17-OCT-2005
± - -	± 0.20	±0.5°	CHECKED	M.FOLEY	25-OCT-2005
			APPROVED	M.FOLEY	25-OCT-2005

1. BREAK ALL SHARP EDGES 0.40 MAX.
2. DO NOT SCALE DRAWING.
3. DIMENSIONS BASED UPON ASME Y14.5M-1994
4. MAX. ALL MACH. SURFACES N7
5. DRAWING UNITS: METRIC

USED ON: MD-440004

MATERIAL: SEE PARTS LIST

FERMI NATIONAL ACCELERATOR LABORATORY
UNITED STATES DEPARTMENT OF ENERGY

FNAL 1.3GHZ TESLA RF CAVITY LONG END HALF CELL ASSEMBLY

SCALE	DRAWING NUMBER	SHEET	REV
1:1	4904.010-MD-440003	1 OF 1	B

CREATED WITH : Ideas12NXSeries GROUP: ACCELERATOR MECH. SUPPT.

PARTS OF THIS DESIGN ARE THE INTELLECTUAL PROPERTY OF DESY ACCORDING TO DIN 34 / ISO 16016. PARTS OF THIS DRAWING HAVE BEEN REDRAWN WITH DESY'S PERMISSION FOR FABRICATION PURPOSES WITHIN THE USA AND IS TO BE USED EXCLUSIVELY WITHIN FERMILAB. USAGE OUTSIDE OF FERMILAB MUST BE APPROVED BY DESY.

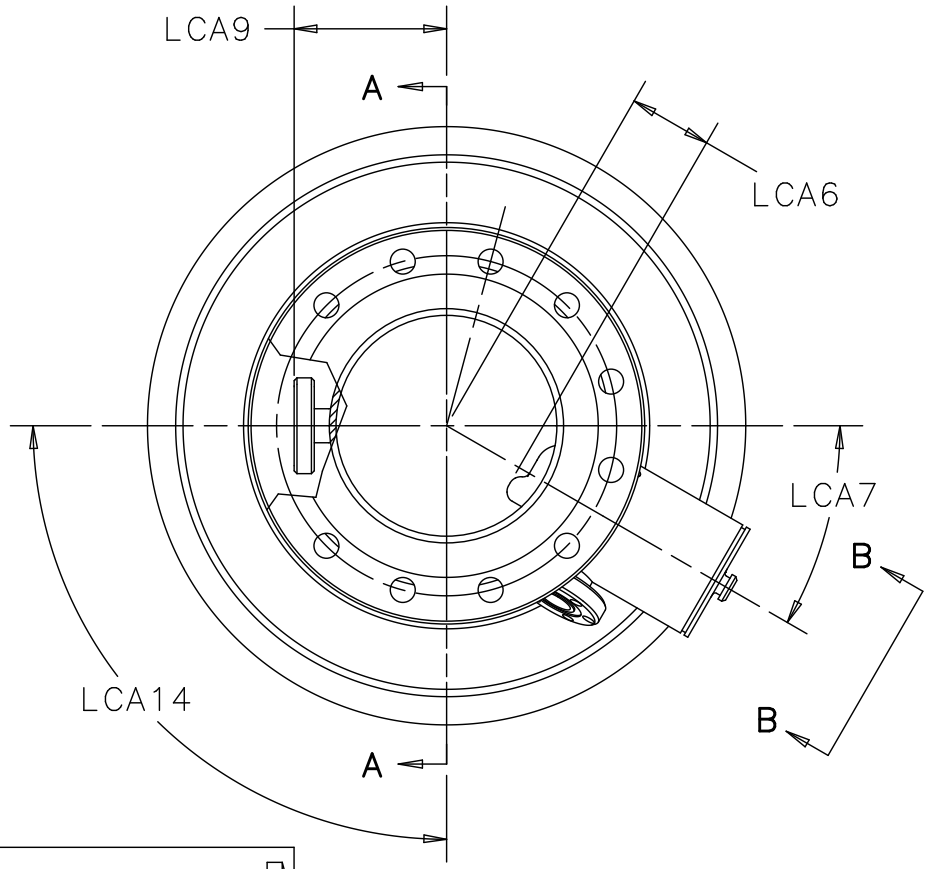

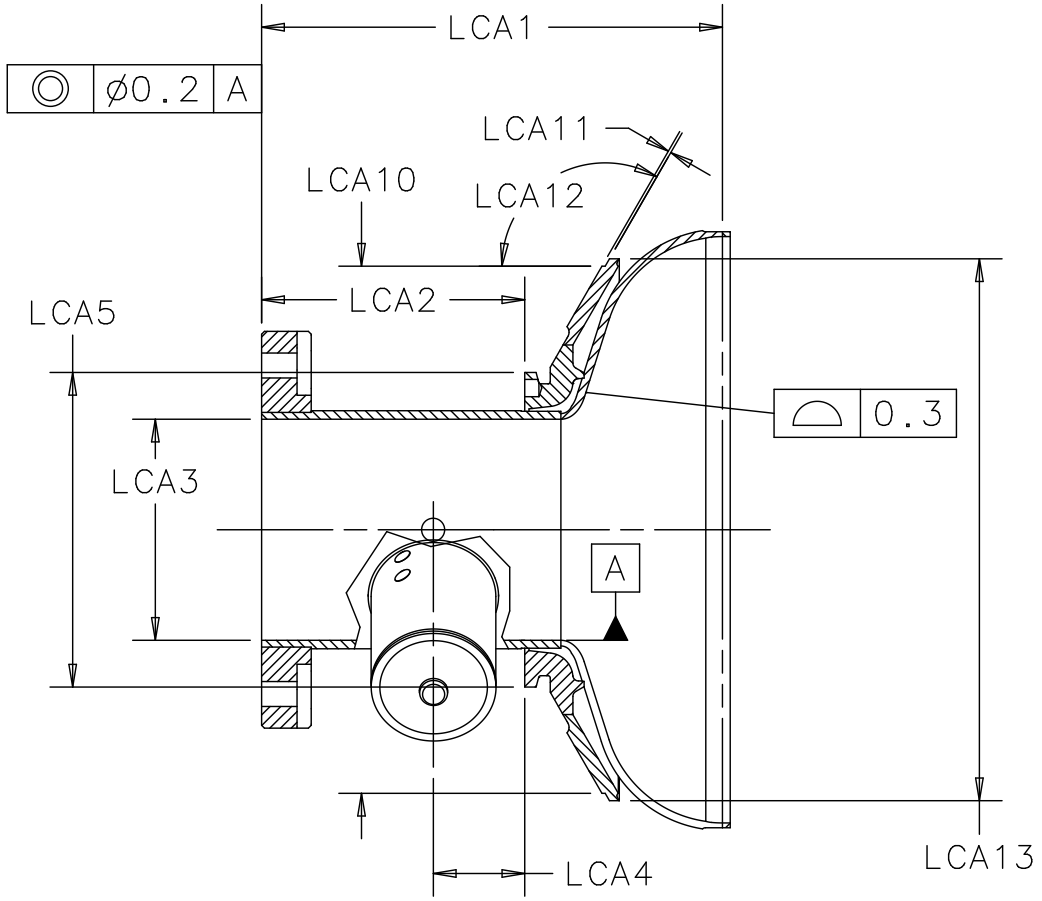

SECTION A-A

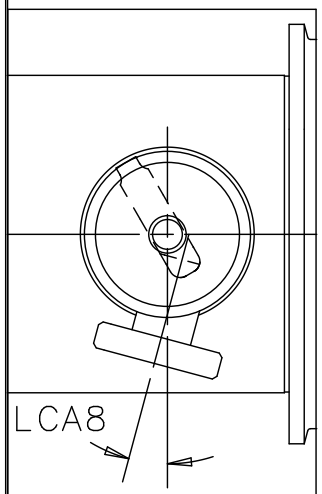

VIEW B-B

UNLESS OTHERWISE SPECIFIED			ORIGINATOR	M.FOLEY	24-OCT-2005
			DRAWN	E.PIRTLE	24-OCT-2005
±	±	±	CHECKED	M.FOLEY	25-OCT-2005
1. BREAK ALL SHARP EDGES MAX.			APPROVED	M.FOLEY	25-OCT-2005
2. DO NOT SCALE DRAWING. 3. DIMENSIONS BASED UPON			USED ON		
4. MAX. ALL MACH. SURFACES ✓			MATERIAL		
5. DRAWING UNITS:					

FERMI NATIONAL ACCELERATOR LABORATORY
UNITED STATES DEPARTMENT OF ENERGY

QUALITY CONTROL DRAWING
FNAL 1.3GHZ TESLA RF CAVITY
LONG END HALF CELL ASSEMBLY

SCALE	DRAWING NUMBER	SHEET	REV
3:8	4904.010-MA-440050	1 OF 1	

3RD

CREATED WITH : Ideas11NXSeries GROUP: ACCELERATOR MECH. SUPPT.

FOR REFERENCE ONLY
NOT FOR FABRICATION
MAY NOT BE CURRENT

REV	DESCRIPTION	DRAWN	DATE
		APPROVED	DATE

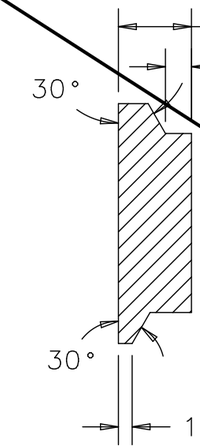

DETAIL A
SCALE 2:1

REPLACE WITH ILC DWG
#D0000000813185

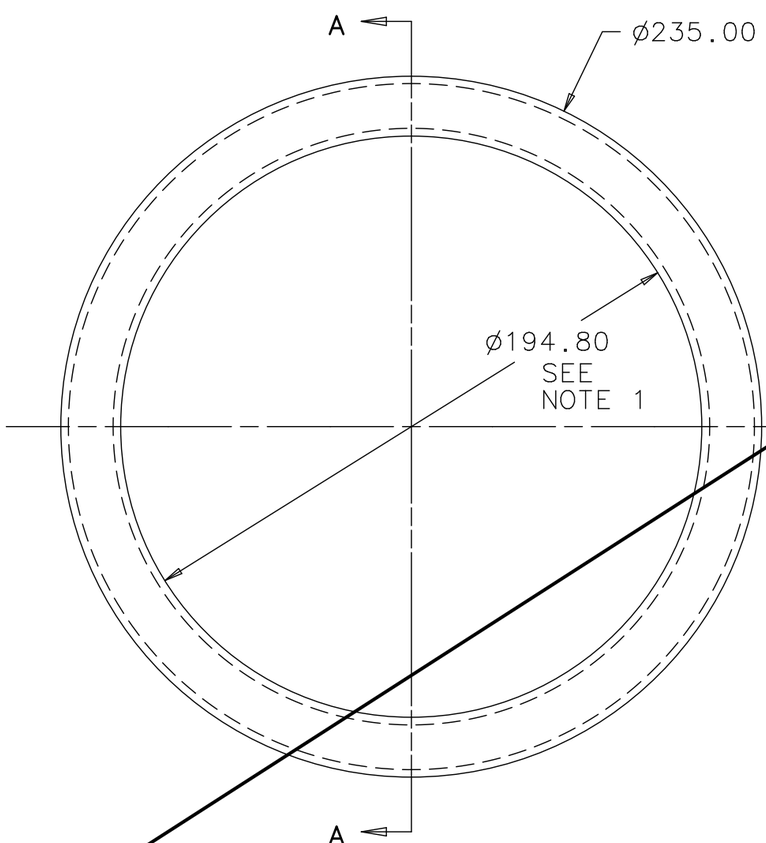

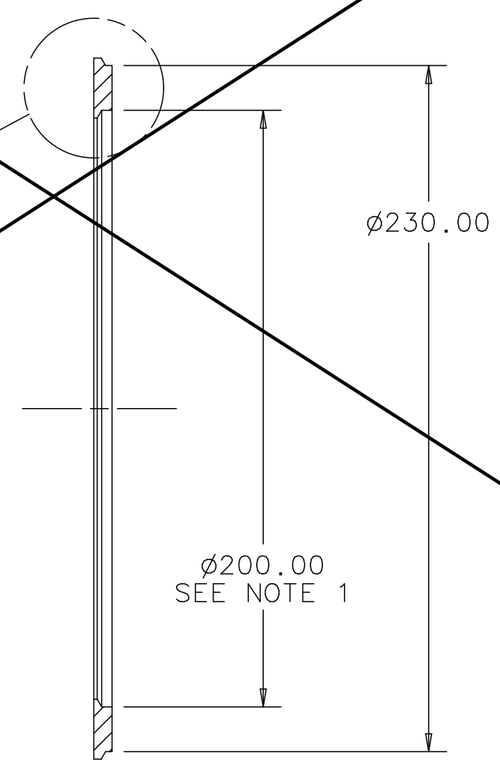

SECTION A-A

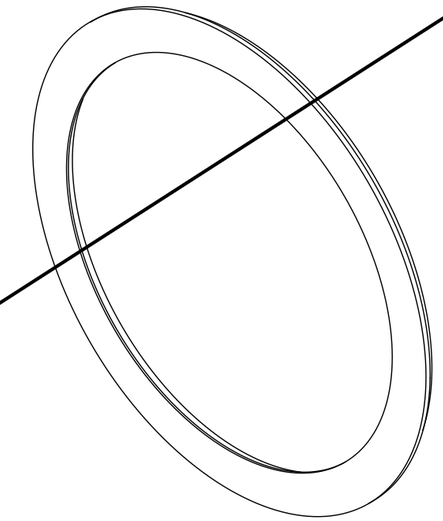

NOTES:

1) MACHINE ID TO WATCH OD OF SHORT END CAP DISK (MD-439168)

UNLESS OTHERWISE SPECIFIED			ORIGINATOR	M.FOLEY	19-DEC-2008
.X	.XX	ANGLES	DRAWN	E.PIRTLE	19-DEC-2008
± - -	± 0.20	± 1°	CHECKED	M.FOLEY	06-JAN-2009
			APPROVED	M.FOLEY	06-JAN-2009

1. BREAK ALL SHARP EDGES 0.40 MAX.
2. DO NOT SCALE DRAWING.
3. DIMENSIONS BASED UPON ASME Y14.5M-1994
4. MAX. ALL MACH. SURFACES N7
5. DRAWING UNITS: METRIC

USED ON: MD-439180

MATERIAL: TITANIUM GRADE 2

FERMI NATIONAL ACCELERATOR LABORATORY
UNITED STATES DEPARTMENT OF ENERGY

FNAL 1.3GHZ TESLA
SHORT END
TRANSITION RING MC END

SCALE	DRAWING NUMBER	SHEET	REV
1:2	4904.010-MB-459457	1 OF 1	

3RD

CREATED WITH : Ideas12NXSeries | GROUP: ACCELERATOR MECH. SUPPT.

Created: 14:33:49 on 08-04-09 (D-M-Y) By: dmitchel State: 1-INITIAL

REV	DESCRIPTION	DRAWN	DATE
		APPROVED	DATE

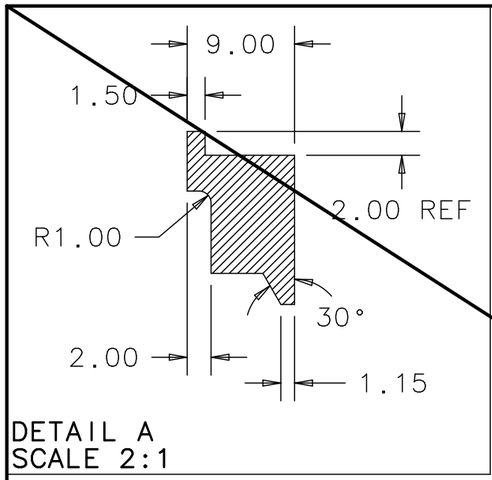

REPLACE WITH ILC DWG
#D000000813195

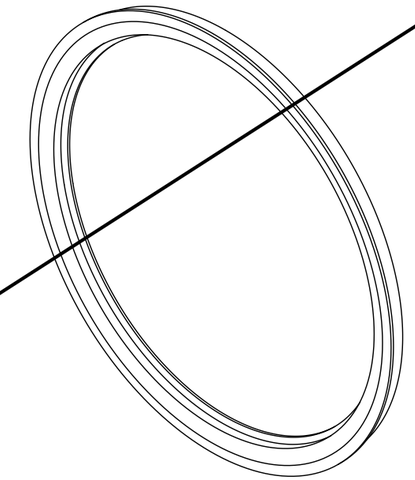

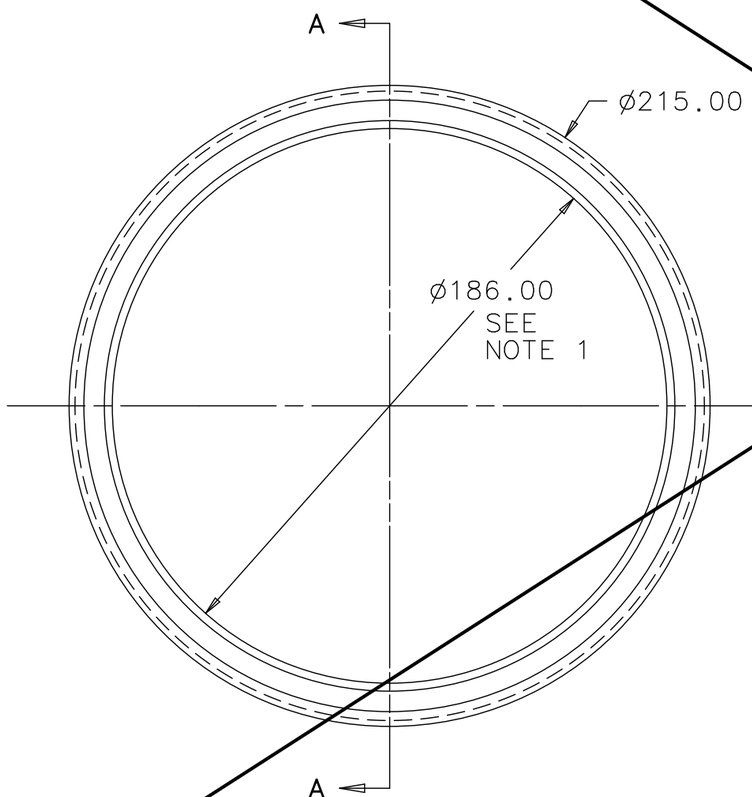

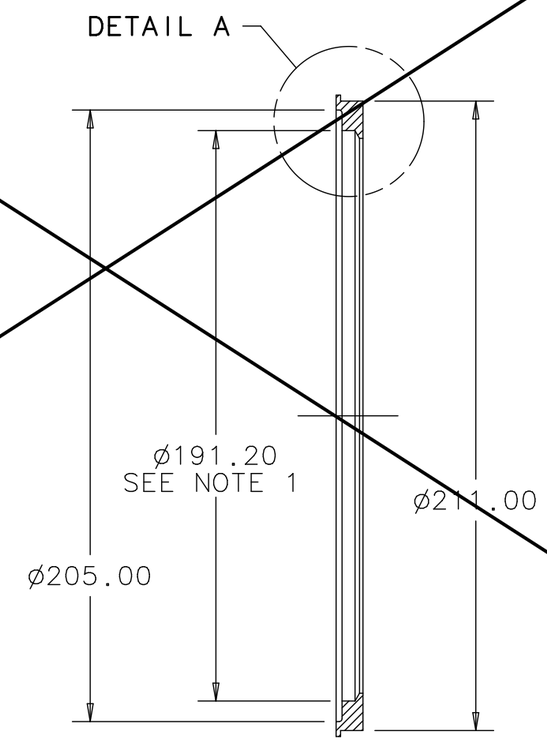

SECTION A-A

NOTES:

1) MACHINE ID TO MATCH OD OF LONG END CAP DISK (MD-439167)

UNLESS OTHERWISE SPECIFIED		
.X	.XX	ANGLES
± - -	± 0.20	±0.5°

1. BREAK ALL SHARP EDGES 0.40 MAX.
2. DO NOT SCALE DRAWING.
3. DIMENSIONS BASED UPON ASME Y14.5M-1994
4. MAX. ALL MACH. SURFACES N7
5. DRAWING UNITS: METRIC

ORIGINATOR	M.FOLEY	17-OCT-2005
DRAWN	E.PIRTLE	19-DEC-2008
CHECKED	M.FOLEY	06-JAN-2009
APPROVED	M.FOLEY	06-JAN-2009
USED ON	MD-440003	
MATERIAL	TITANIUM GRADE 2	

FERMI NATIONAL ACCELERATOR LABORATORY
UNITED STATES DEPARTMENT OF ENERGY

FNAL 1.3GHZ TESLA
LONG END
TRANSITION RING FIELD PROBE END

SCALE	DRAWING NUMBER	SHEET	REV
1:2	4904.010-MB-459459	1 OF 1	

3RD

CREATED WITH : Ideas12NXSeries GROUP: ACCELERATOR MECH. SUPPT.

Created: 16:05:22 on 08-04-09 (D-M-Y) By: dmitchel State: 1-INITIAL

NOTES (UNLESS OTHERWISE SPECIFIED):

1. DO NOT BREAK SHARP EDGES.
2. PARTS MUST BE FREE OF DIRT, GREASE, OIL AND CHIPS.

REVISION HISTORY

CAD MAINTAINED. CHANGES SHALL BE INCORPORATED BY THE DESIGN ACTIVITY.

ZONE	REV	DESCRIPTION	DATE	APPROVED
	A	INITIAL RELEASE		

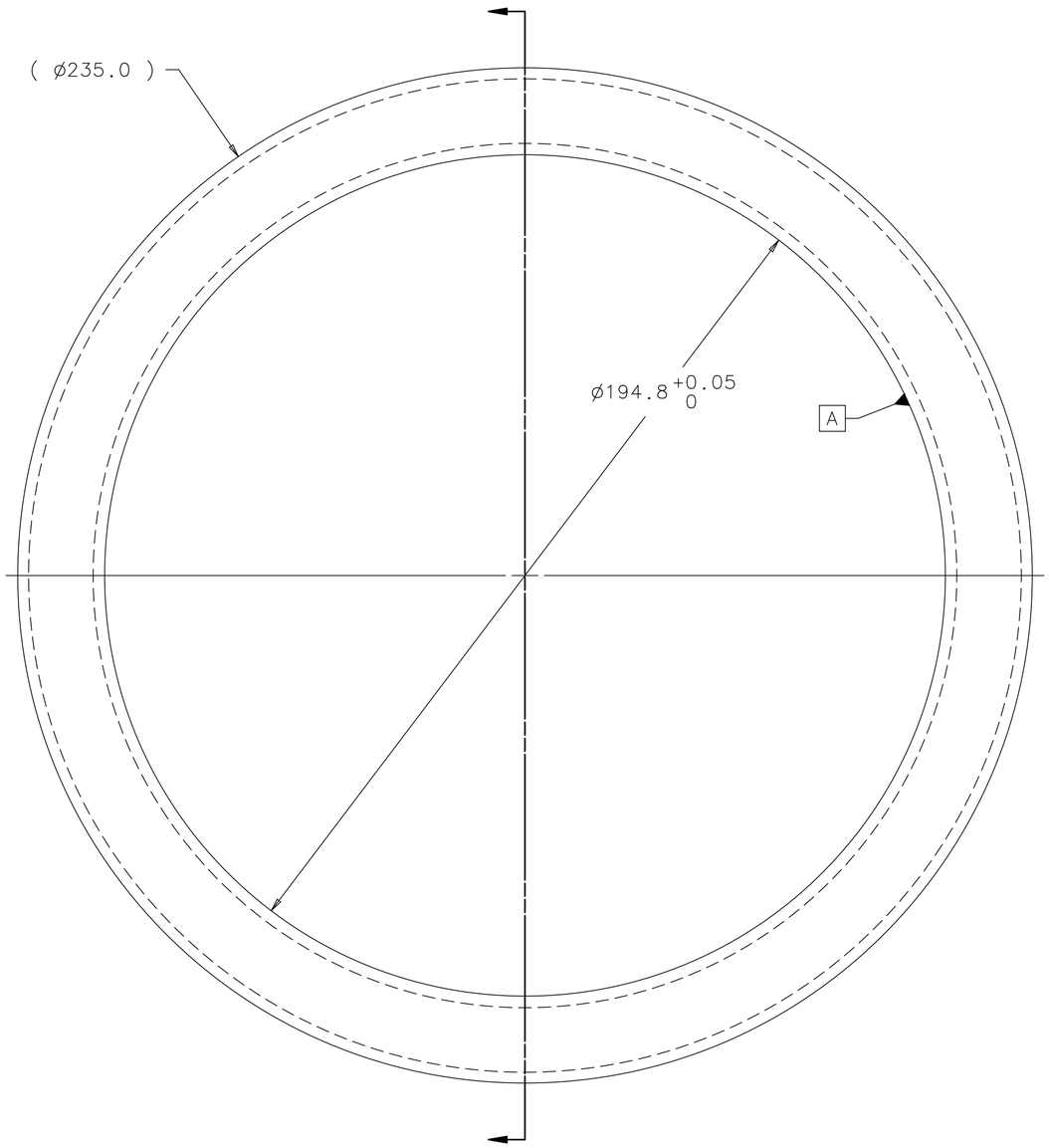

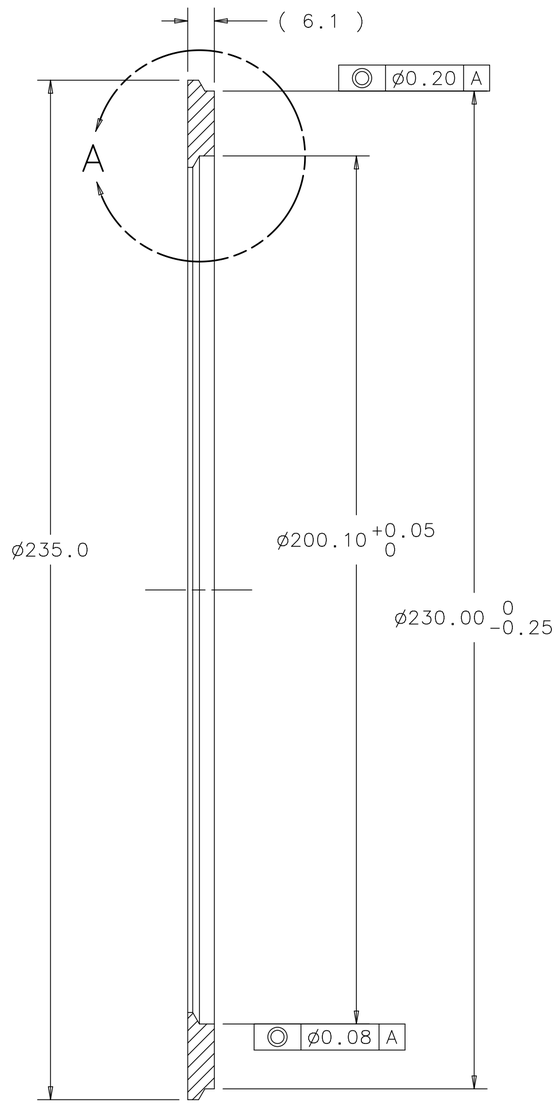

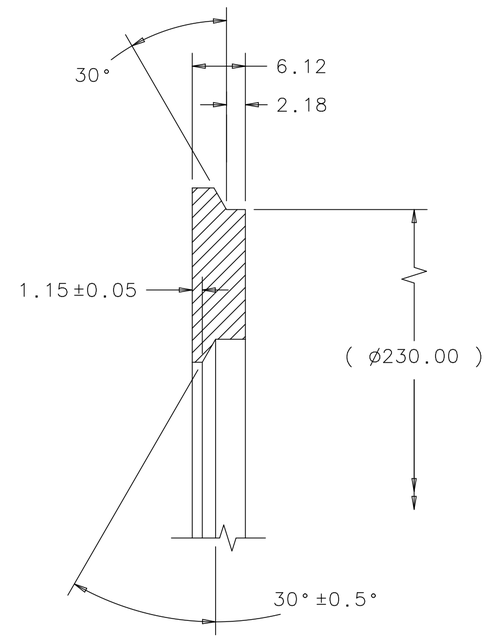

DETAIL A

SCALE 2/1

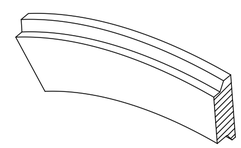

-	-
NEXT ASSY	USED ON
APPLICATION	

FINISH: N/A

MATERIAL: TITANIUM GRADE2

UNLESS OTHERWISE SPECIFIED:
DIMENSIONS ARE IN MILLIMETERS
INTERPRET DIM PER ASME Y14.5M-1994
BREAK ALL SHARP EDGES .75 MAX.
ALL MACH. SURFACES 3.2 / MAX.

TOLERANCES: X ± 2, .X ± 0.8, .XX ± 0.13, ANGLE ± 1°

THIRD ANGLE PROJECTION

DRAWN BY: L ROSINE	DATE: 13NOV07	
CHECKED BY	DATE	
ENGINEERED BY	DATE	
DATABASE: DESY EDMS	TEAM/GROUP: T4CM DESIGN	
CAD: I-DEAS	SOLID MODEL NO.: D00000000827582	

FERMI NATIONAL ACCELERATOR LABORATORY
UNITED STATES DEPARTMENT OF ENERGY
P.O. BOX 500, BATAVIA, IL 60510-0500

TITLE: ILC TYPE IV CRYOMODULE HELIUM VESSEL CAVITY_TRANS_RING_MC_END

SIZE	CAGE CODE	DWG NO.	REV
A2	0U5R6	D00000000813185	A

SCALE: & AS NOTED | DO NOT SCALE DWG | SHEET 1 OF 1

NOTES (UNLESS OTHERWISE SPECIFIED):

1. DO NOT BREAK SHARP EDGES.
2. PARTS MUST BE FREE OF DIRT, GREASE, OIL AND CHIPS.

REVISION HISTORY
CAD MAINTAINED. CHANGES SHALL BE INCORPORATED BY THE DESIGN ACTIVITY.

ZONE	REV	DESCRIPTION	DATE	APPROVED
	A	INITIAL RELEASE		

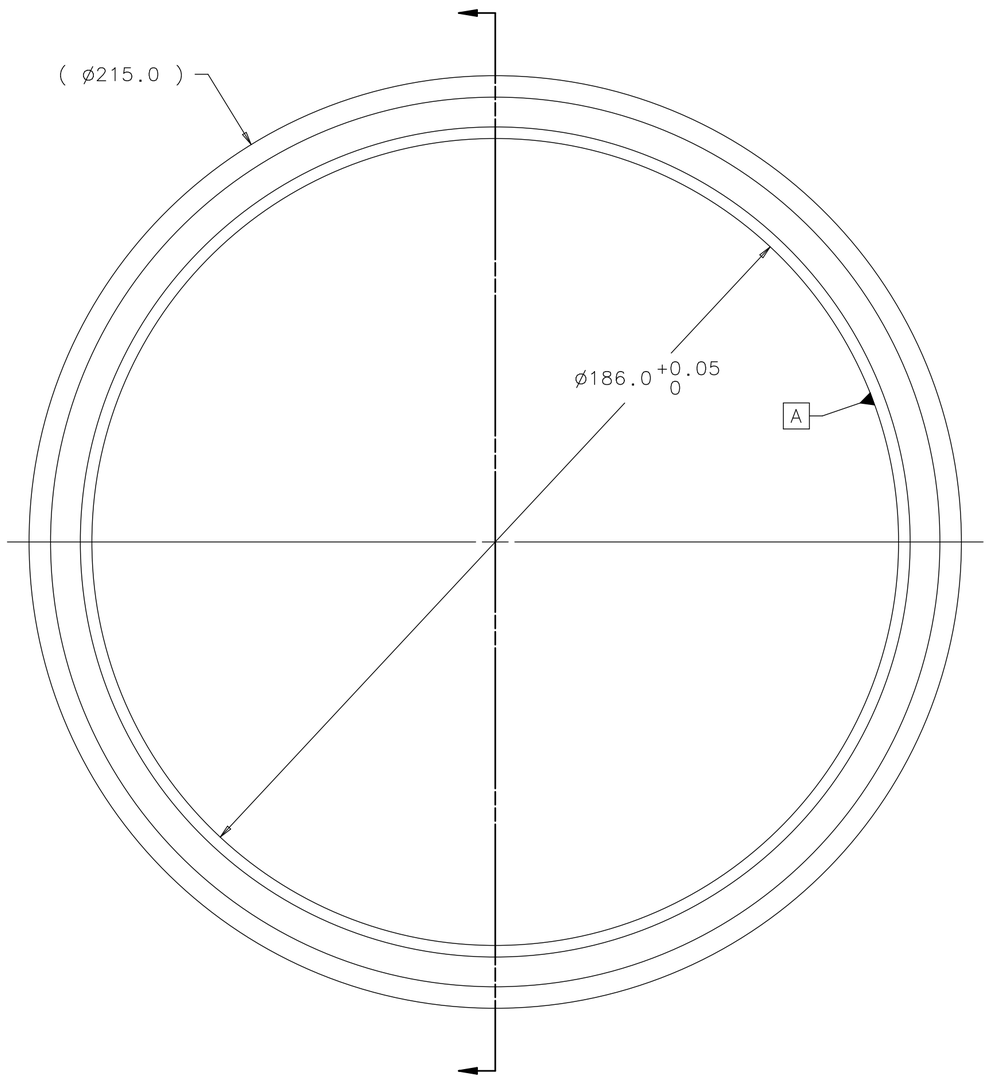

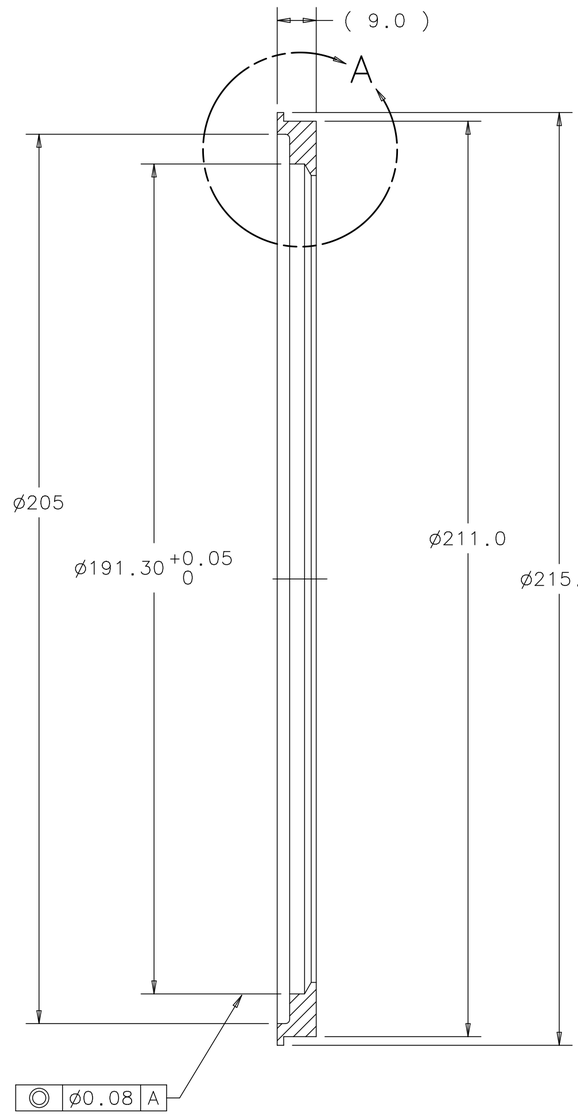

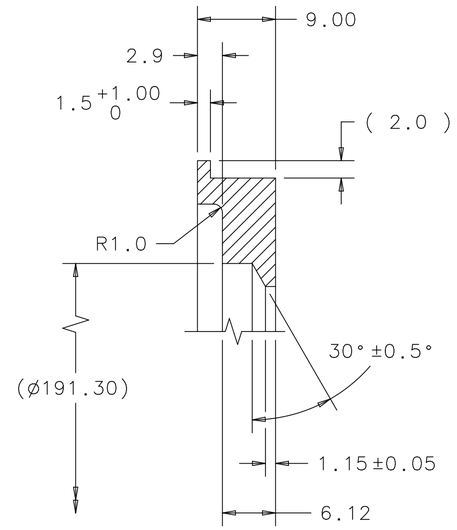

DETAIL A
SCALE = 2:1

-	-
NEXT ASSY	USED ON
APPLICATION	

FINISH: N/A

MATERIAL: TITANIUM GRADE 2

UNLESS OTHERWISE SPECIFIED:
DIMENSIONS ARE IN MILLIMETERS
INTERPRET DIM PER ASME Y14.5M-1994
BREAK ALL SHARP EDGES .75 MAX.
ALL MACH. SURFACES 3.2 MAX.

TOLERANCES: X ± 2, .X ± 0.8, .XX ± 0.13, ANGLE ± 1°

THIRD ANGLE PROJECTION

DRAWN BY: L ROSINE — DATE: 13NOV07
CHECKED BY — DATE
ENGINEERED BY — DATE

DATABASE: DESY EDMS — TEAM/GROUP: T4CM DESIGN
CAD: I-DEAS — SOLID MODEL NO.: D00000000827572

FERMI NATIONAL ACCELERATOR LABORATORY
UNITED STATES DEPARTMENT OF ENERGY
P.O. BOX 500, BATAVIA, IL 60510-0500

TITLE: ILC TYPE IV CRYOMODULE HELIUM VESSEL CAVITY_TRANS_RING_FLD_PROBE_END

SIZE	CAGE CODE	DWG NO.	REV
A2	0U5R6	D00000000813195	A

SCALE 1:1 | DO NOT SCALE DWG | SHEET 1 OF 1

Created: 14:07:51 on 08-04-09 (D-M-Y) By: grimm State: 1-INITIAL