Slim Blade Tuner for CM2.
Warm and Cold Operation Procedure.

Yu. Pischalnikov (pischaln@fnal.gov)

Slim Blade Tuner Description

While not an integral part of the pressure vessel design, the blade tuner's function is affected by the performance of the pressure vessel. The "slim" blade tuner is assembled around the titanium bellows on the helium vessel. The blade tuner maintains the tuning of the RF cavity after cooldown of the vessel and during operation of the RF cavity. The design that is used on AES-009 is version 3.9.4.[1]

Figure 1 shows the different parts of the blade tuner assembly. The tuner rings (part numbers 844675 and 844685) are welded to the titanium helium vessel.

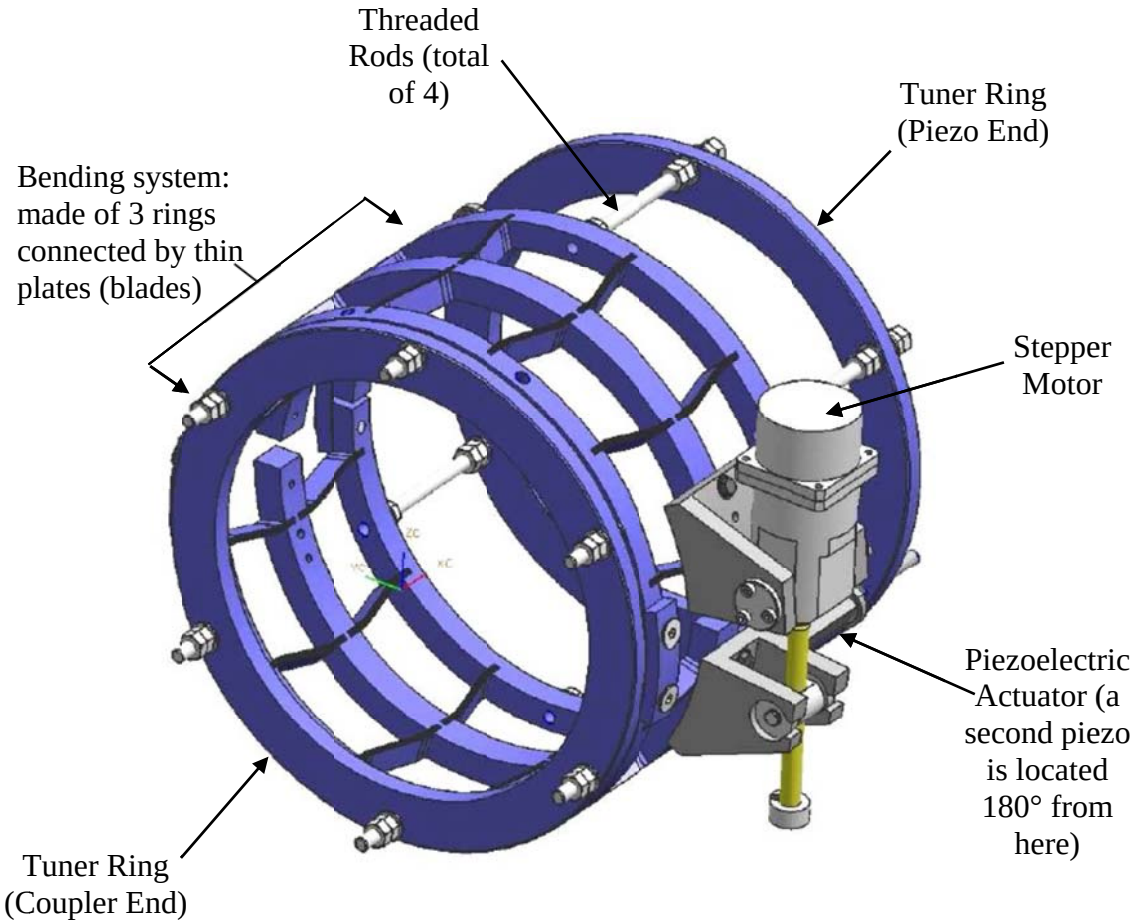

Figure 1. Model of the Slim Blade Tuner

The tuner assembly is composed of two parts that are defined by their tuning functions: slow

tuner assembly and the fast tuner assembly. The slow tuner assembly consists of the stepper motor and the bending system. The bending system consists of three rings. One ring is rigidly attached to the helium vessel by way of the tuner ring (at the coupler end). The central "ring" is divided into two halves. The three rings are connected by thin plates, or blades.[2] The stepper motor "is rigidly connected to the helium vessel and produces a rotation of the [central ring halves]. The movement of the [central ring halves] induces the rotation of the bending system that changes the cavity length." The design of the bending system of the slow tune assembly "provides the amplification of the torque of the stepper motor, ten times reducing the total movement and increasing the tuning sensitivity."[1]

The fast tuner assembly consists of two piezoelectric actuators that are parallel to each other and clocked 180° from each other. Each piezoelectric actuator mounted inside capsulation fixture. Objectives of this fixture to minimize shearing forces applied to piezo-stack and to act as device in the case of a piezoelectric actuator failure. One side of the fast tuner is fixed through the bending system of the slow tuner assembly and the helium vessel to one side of the cavity , and the other side of the piezoactuator is pushing against ring welded to second half of the helium vessel. Figures 2 show how the piezoelectric actuators are installed.

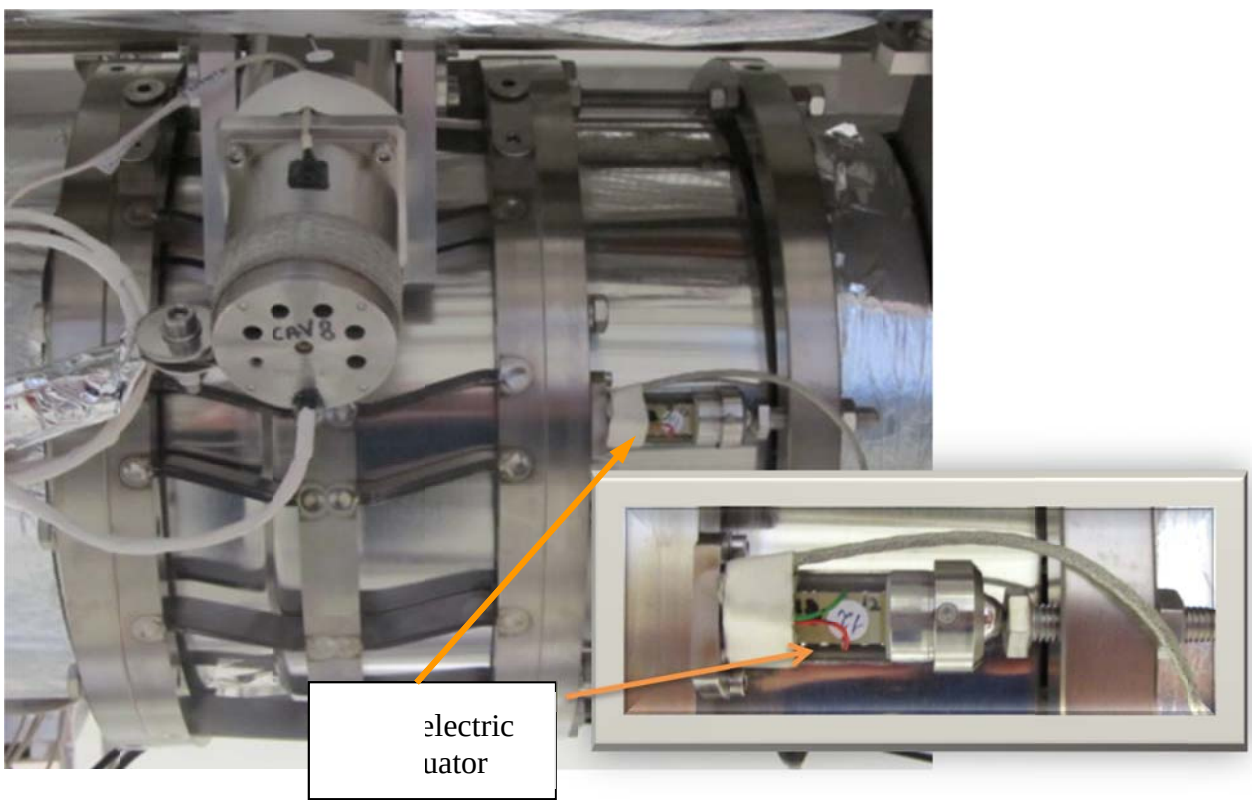

Figure 2. Slim Blade Tuner Installed on Helium Vessel. One of the two piezoelectric actuators, assembled inside fixture, is shown here. The other piezo is located 180° from the one shown here.

Primary goal of the slow tuner system is to lengthen the cavity to tune resonance frequency of the cavity to nominal (F=1,3GHz) value after cooldown. The extension compensates for the combined effects of thermal contraction and pressurization, thus bringing the SRF cavity back to its desired resonance frequency. The slow tune (also called "coarse tuner") is able to increase the vessel/cavity length up to 1.5-mm after cooldown. At the same time typical cavity lengthening, as it has been measured at HTS, are 600(+/-200um). Fast tuner (also called "fine tuner") could be used to provide fine tuning of the cavity to resonance frequency. During operation of the RF cavity in "RF-pulse mode", cavity experiences phenomenon is called dynamic Lorentz Force Detuning. Radiation pressure on the walls of the SRF cavity decreased the cavity length. The fast tuner (with appropriate drivers) has been used to compensate dynamic detuning of the SRF cavity.

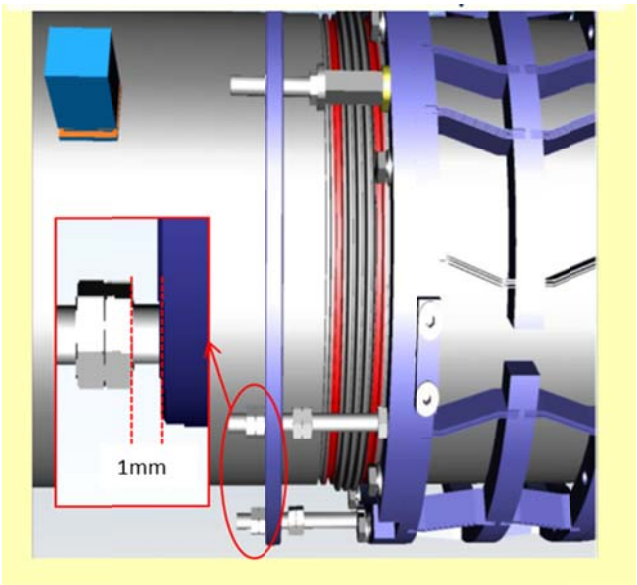

Figure 3. Slim Blade Tuner with details of the safety rods. Insert: shown gap (1mm) between outer nut on the safety rod and the tuner ring.

The tuner ring and four threaded (safety) rods provide an additional limit on the movement of the tuner assembly. These are safety rods for cavity transportation. During assembly at room temperature, the outer nuts are installed so that there is a 1-mm gap between each nut and the tuner ring. At the same time tuner has been designed with assumption that just 0.2-mm gap between each nut and the tuner ring will be required. Experiment at HTS revealed that for fast tuner/piezoactuator normal operation gap need be not less than 1mm (figure 3).

Slim Blade Tuner Operation

Warm Tuner operation during Pressure Test of 2-Phase Helium Line at NML

Increasing the gap between the outer bolts and the tuner ring to 1-mm led to special consideration of cavity safety precaution for a Pressure Test of 2-Phase Helium Line at NML. To stay inside the elastic region (when at room temperature) the cavity could not be stretch more 0.5mm. At the same time pressure tests of the dressed cavities at MP9 revealed that at a 2-atm

pressure differential the cavity length could be increased more than 0.5mm and cavities could be permanently/uncontrollably detuned.

We have proposed and tested a method to prevent cavities from uncontrollable detuning during Pressure Test of 2-Phase Helium Line at NML. This method is based on using blade tuner to slightly squeeze cavity using safety rod. Typical cavity tuning curve equipped with blade tuner is presented on figure 4. During standard cold operation tuner always stretches the cavity (range C-D in the figure 5).

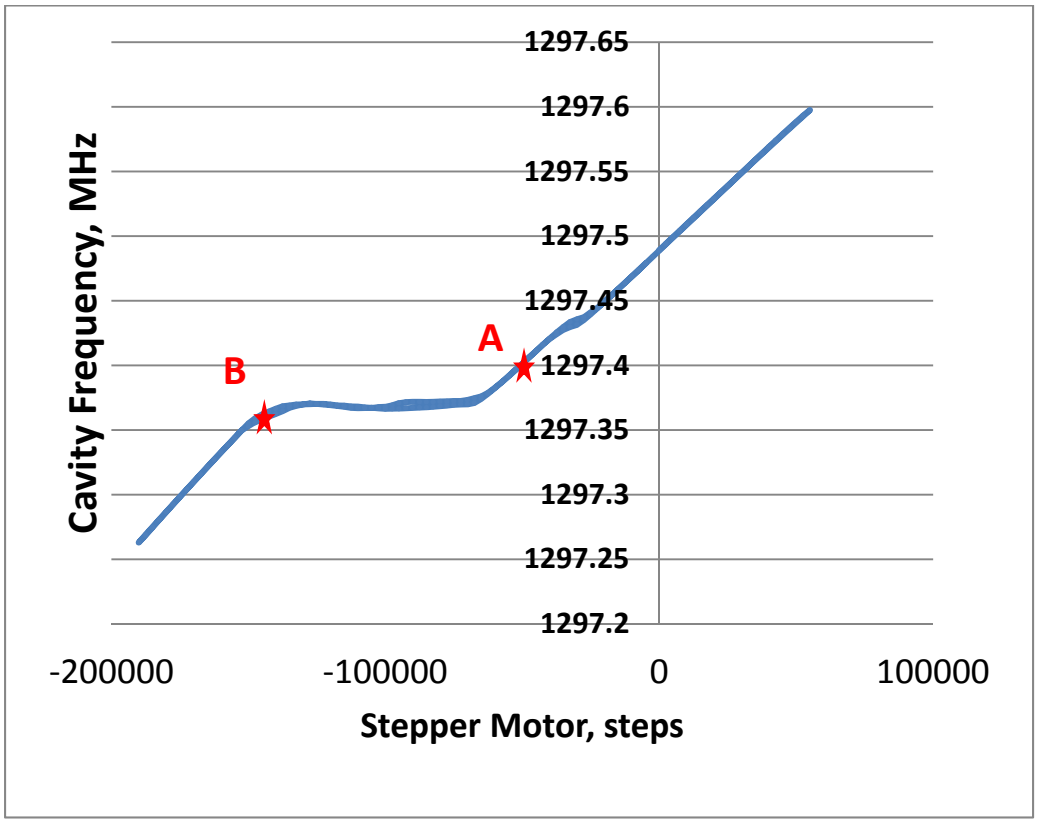

Figure 4. Change of the warm cavity tune by blade tuner ("cavity frequency .VS. stepper motor steps). Measurements were done at following conditions: (1)Cavity was filled with Argon at P=1.05Ba; (2) He Vessel was filled with air at P=1Bar; (3) Insulated vacuum space inside cryomodule filled with air at P=1Bar. Point A is a position of the cavity/tuner system as it tuned at TD. At point A cavity stretched on approximately 100um. Point B is a position of the cavity/tuner system for Pressure Test of 2-Phase Helium Line. At the point B cavity is squeezed for approximately 30um and frequency is tuned ~10kHz below "unconstrained cavity" value. Plato in the cavity's tune curve between points A&B is configuration of tuner/cavity system when stroke of the blade tuner is not translated to cavity (both piezostacks and outer nuts of the safety rod do not touch tuner ring). Size of the plato is approximately 75ksteps.

To prepare warm cavities inside CM2 for Pressure Test of 2-Phase Helium Line at NML each of the cavities need to be tune from point A to point B. All cavity/tuner systems inside CM2 will be set at point A during transportation of the CM2 from ICB to NML (cavity will be squeezed by tuner). Cavity/tuner systems need to be tune to point B right after delivering CM2 to NML. This

step must be accomplished before insulated vacuum volume will pump out. Maximum operating temperature of the stepper motor is 40C and special efforts need to be made to monitor temperature of the stepper motor during process of cavity tuning from point A to point B. Cernox RTDs installed on the body of the each stepper motor will measured with high precision temperature of motor at cryogenic temperature. At the same time Cernox RTDs have only one calibration point near 273K (next point at LiqN2 temperature). Special study has been done to evaluate accuracy of the motor temperature monitoring with Cernox RTDs in the range of 20-50C. Conclusion of this study: with existing calibration files accuracy of Cernox RTDs is +/-5C in the range of 20-50C. It will be safe to limit temperature of the motor (as it will be monitor by Cernox RTD) to just 30C (instead of 40C).

When cavity tune to point B gap between outer bolts (for all of the 4 safety rods) and the tuner ring is zero and cavity squeezed (from relax position) on approximately 30um. At this position forces developed from overpressure of 2-Phase Helium Line will applied through 4 stainless steel rods to the blade tuner instead of cavity.

After "Pressure Test of 2-Phase Helium Line" cavity/tuner system will stay at the same position for whole cool-down procedure. This requirement is necessary because there is chance to develop pressure spikes (inside of 2-Phase Helium Line volume) during CM2 cool-down procedure.

For purposes of increasing lifetime of the blade tuner (especially motor/harmonics drive unit) it is important to limit operation of tuner at room temperature.

Cavity Tuning procedure after CM2 cooled down to 2K.

As it was described above after cryomodule cooled-down to 2K cavities will be at point B of the cavity tuning curve. To tune cavities to the "nominal" operational frequency value (1.3GHz) stepper motor need to be run for ~ 200ksteps. This ~200ksteps range included ~75kstep of plateau – region of "cavity tuning curve" when cavity's tune will not change even stepper motor is changing blades angle (see figure 4).

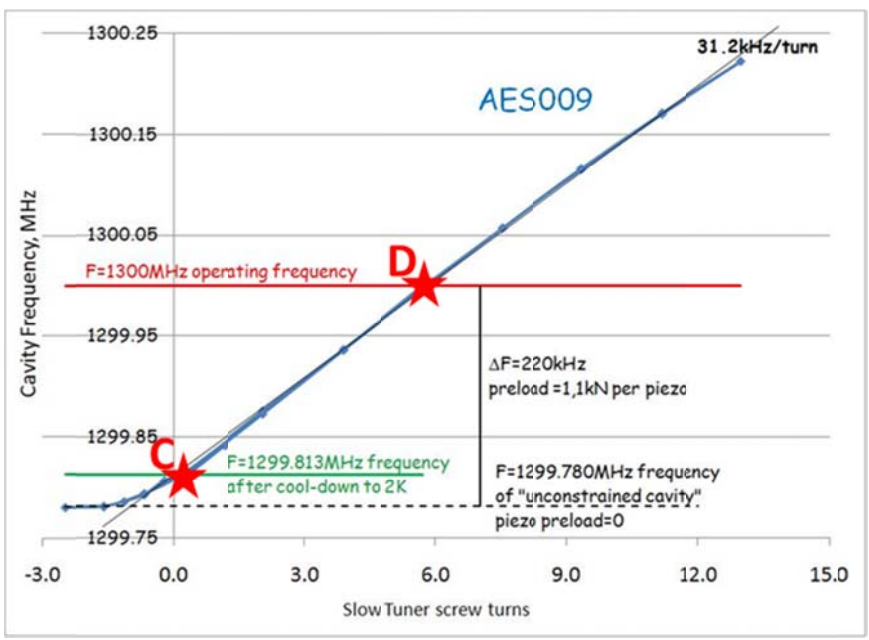

Figure 5. Change of the cold cavity tune by blade tuner ("cavity frequency .VS. stepper motor steps). One turn of the slow tuner screw is equivalent to 20000 steps of the stepper motor. Point C is a position of the cavity/tuner system as it tuned at TD (after cool-down to 2K). Point D is the nominal operational point – 1.3GHz.

There is no any special requirements for the duty cycle of stepper motor (run N steps/wait N second). Temperature of the motor is major parameter, which need to be monitor. Cernox RTD installed on the body of the each stepper motor. Typical temperature of the motor after CM cooled down is ~40K. It is good practice to keep motor temperature less than 100K.

TD developed special cart with hardware/software to run stepper motor & monitor cavities frequency and temperature of the motor at the same time. Even CM2 operation is in the AD domain it will be reasonable to use TD equipment/experts to do initial tuning of the CM2 cavities to nominal frequency first time after CM2 cool-down.

All cavities/tuner systems installed inside CM2 have been tested at HTS. Summary of Cavity/Tuner measured performance parameters presented on the Table 1.

CM2 Cavity/Tuner parameters.

Cavity ID #	Frequency before tuner installation(MHz) 1bar, 300K	Frequency after cool-down (MHz) He -20torr, 2K	Slow Tuner slope (kHz/turn)	Piezo-to-Cavity Sensitivity, Hz/V	Dynamic LFD Hz/s/(MV/m)^2
ACC013	1297.385	1299.900	1.51	7.2	-970
AES009	1297.388	1299.813	1.77	**2.7**	-1240
ACC008	1297.321	1299.750	-	6.5	-860
AES010	1297.200	1299.793	1.59	8.5	-950
AES008	1297.175	1299.735	1.51	7.3	-1600
AES016	1297.415	1299.899	1.60	10.5	-880
RI029	1297.106	1299.757	-	14	-650
AES007	1297.338	1299.791	1.49	10.4	-740
RI018	1297.417	1299.882	1.59	13(15)	-740
RI019		1299.848	**1.63**	10(13)	-760
RI024		1299.530	1.50	10(14)	-960
RI027		1299.749	2.02	9(10)	-950
Average	**1297.336**	**1299.813**	**1.62**	**9.7**	**-960**
σ	***0.116***	***0.065***	***0.16***	***2.8***	***295***

References

1. Panzeri, N., “Design of Slim Tuner ver. 3.9.4,” INFN-Milano LASA Document No. ILC-TUN-DE-39, April 2008.
2. Pagani, C., et al, “Blade-Tuner Performance,” presented at the LCWS08 and ILC08 conference, November 2008.
3. Yu. Pischalnikov., et al, “Test of a Coaxial Blade Tuner Tuner at HTS/FNAL”., PAC2011, New York, USA, 2011.