LESER The-Safety-Valve.com	**Sizing acc. to ASME VIII for Gas VALVESTAR® - v.7.1.4_07_26.0**	Page:	1 of 6
		Date:	2008-12-08 12:54:46
		Project:	New project
		Tag No:	
		LESER Job №	

Sizing - Medium				
1000	Designation		Air	
1004	Formula			
1001	Molar mass	M	29	kg/kmol
1002	Ratio of specific heats	k	1.400	
1003	Compressibility factor	Z	1.000	

Sizing - Service condition				
1100	Maximum allowable working pressure			
1101	Set pressure	p	43	psi-g
1102	Superimposed back pressure	paf	0	psi-g
1103	Built up back pressure	pae		
1104	Backpressure		0	psi-g
1105	Overpressure	dp	10.00	%
1106	Environmental pressure	pu	14.696	psi
1107	Temperature	T	68	°F
1108	Required massflow	qm,ab	68,805.695	lb/h
1109	Volume flow to be discharged (working condition)	qvb,ab	216,710.786	ft³/h
1110	Volume flow to be discharged (std condition) [T=60 °F P=14.7 psi]	qvn,ab	14,999.72	SCFM
1120	Rupture disc correction factor	Kc	1.000	

Sizing - Calculation				
1200	Certified massflow	qm,zu	68,805.695	lb/h
1201	Certified volumeflow (operating condition)	qvb,zu	216,710.786	ft³/h
1203	Certified volumeflow (standard condition)	qvn,zu	25,488.055	m³/h
1204	Maximum mass flow	qm,max	76,450.772	lb/h
1205	Maximum volume flow (working condition)	qvb,max	240,789.762	ft³/h
1206	Maximum volume flow (standard condition)	qvn,max	28,320.061	m³/h
1207	Capacity exceed		0.00	%

Valve - General			
1500	Article number		4414.4722
1512	Reseller article number		-
1513	Quantity of safety valve		1
1501	Certified coefficient of discharge for steam and gases	K,DG	0.699
1502	Certified coefficient of discharge for liquid	K,F	0.521
1453	Orifice		Q
1505	Bonnet / Lifting device		Cap H2
1506	Body-/ Inlet base material		1.4408 / SA 351 CF8M
1511	Bonnet		Closed Bonnet
1514	Order code	4414.4722-43 psi-g-H47H51-3.1	

Name	ASME VIII				
Date	2008-12-08 12:54:46				
Rev.No	1				

Inlet connection		
1303	Connection standard	acc. to DIN EN 1092
1304	DN / NPS	150
1305	PN / PR	PN 40
1306	Flange facing	DIN EN 1092-1 Form B1 (DIN 2526 Form C)

Outlet connection		
1353	Connection standard	acc. to DIN EN 1092
1354	DN / NPS	250
1355	PN / PR	PN 16
1356	Flange facing	DIN EN 1092-1 Form B1 (DIN 2526 Form C)

Valve - Dimensions				
1400	Discharge area	Ao	19.021	in²
1401	Discharge diameter	do	4.921	inch
1402	Centre to Face dimensions	a	11.22	inch
1403	Centre to Face dimensions	b	8.858	inch
1405	Height	H	42.638	inch
1406	Weight	M	288.806	lb

Lift				
1507	Standard		1.331	inch

Valve - Calculation				
1200	Certified massflow	qm,zu	68,805.695	lb/h
1201	Certified volumeflow (operating condition)	qvb,zu	216,710.786	ft³/h
1203	Certified volumeflow (standard condition)	qvn,zu	25,488.055	m³/h
1204	Maximum mass flow	qm,max	76,450.772	lb/h
1205	Maximum volume flow (working condition)	qvb,max	240,789.762	ft³/h
1206	Maximum volume flow (standard condition)	qvn,max	28,320.061	m³/h
1207	Capacity exceed		0.00	%
1600	Required actual discharge area	Ao, req	19.021	in²
1601	Required discharge diameter	do,req	4.921	inch
1603	Noise level in 1m distance from the valve (acc. to API 520)	L	142.452	dB
1611	Reaction force (acc. to API 520)	Fr	678.348	lbf
1617	Back pressure correction factor	Kb	1.000	
1618	Cold differential test pressure	CDTP	43	psi-g
1620	Cold differential test pressure, manually	CDTP		

Valve - Part list

	PosNo	Denomination	Q	Material ASME	Material DIN
12010	1	Body	1	SA 351 CF8M	1.4408
12050	5	Seat	1	316L	1.4404
12070	7	Disc	1	316L	1.4404
12080	8	Guide	1	316L	1.4404
12090	9	Bonnet	1	Fabricated SA-stainless steel	1.4571
12120	12	Spindle	1	316L	1.4404
12140	14	Split ring	2	316L	1.4404
12160	16	Spring plate	1	316L	1.4404
12170	17	Spring plate	1	316L	1.4404
12180	18	Adjusting screw	1	316L	1.4404
12190	19	Lock nut	1	316L	1.4404
12220	22	Lift stopper	1	316L	1.4404
12400	40	Cap H2	1	316L	1.4404
12540	54	Spring	1	Stainless steel	1.4310
12550	55	Bolt	12	B8M	1.4401
12560	56	Nut	12	B8M	1.4401
12570	57	Pin	1	Stainless steel	1.4310
12590	59	Securing ring	1	316Ti	1.4571
12600	60	Gasket	1	Graphite/1.4401	Reingraphit + 1.4401
12610	61	Ball washer	1	Hardened Stainless steel/316	1.3541/1.4401
12750	75	Spacer	1	316Ti	1.4571
12850	85	Lead seal	1	Plastic	Kunststoff
12860	86	Seal wire	1	321	1.4541
12980	98	sealing plug	1	316L	1.4435

LESER is free to upgrade materials without further notice.

Spare parts

Part number	PosNo	Denomination	Startup	2 year oper.	5 year oper.
200.5849.9041	7	O-ring-disc 441 DN150/125 J22	1	1	1
241.4249.0000	12	Spindle 30x 639.5	0	0	1
480.1205.0000	57	pin 6x40	1	1	1
500.2205.0000	60	Gasket V150	1	1	2
510.0404.0000	61	Ball D15	1	1	1

Drawing

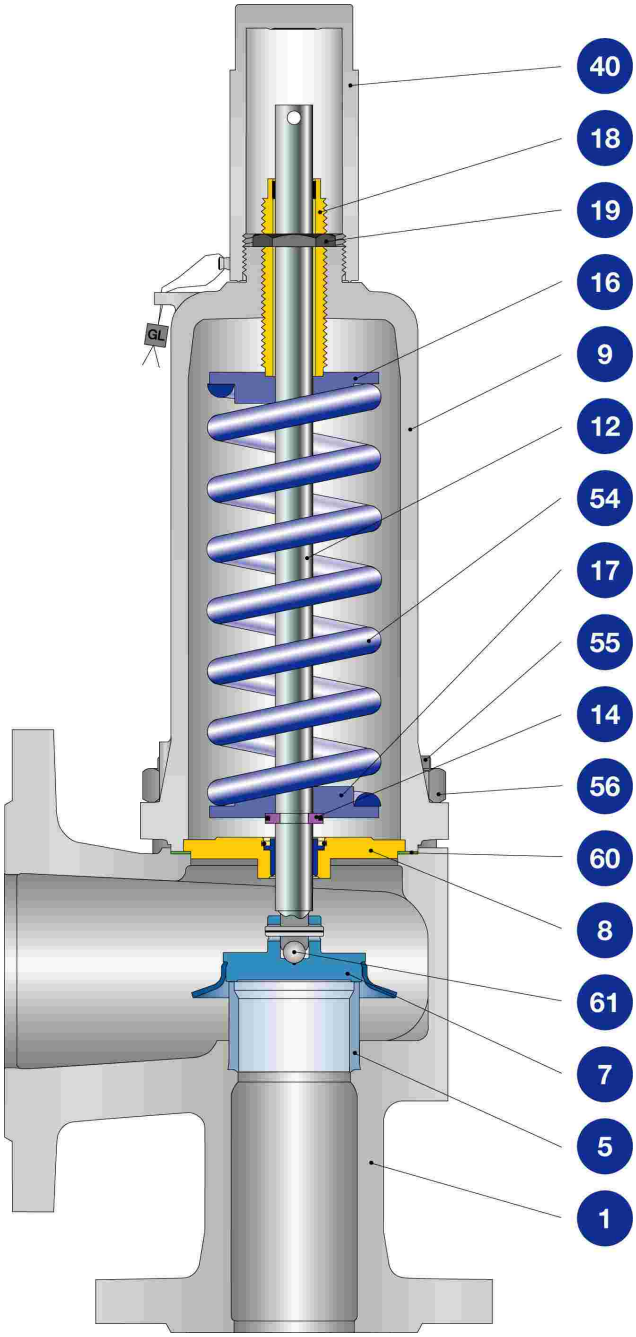

Drawing is a view; the effective geometry could deviate from this view. The configuration of safety valve could have effect on the center to face dimensions.

Name	ASME VIII				
Date	2008-12-08 12:54:46				
Rev.No	1				

Drawing

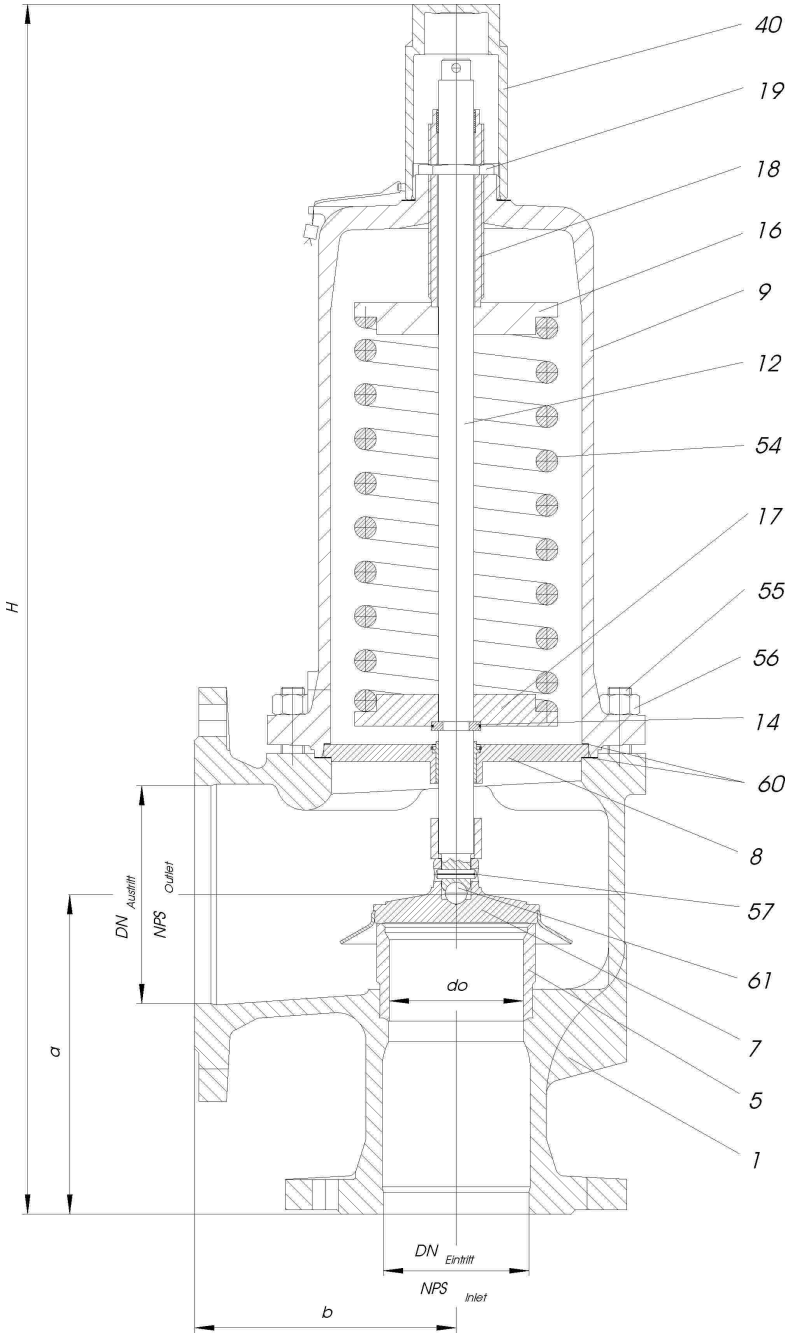

Drawing is a view; the effective geometry could deviate from this view. The configuration of safety valve could have effect on the center to face dimensions.

ASME nameplate

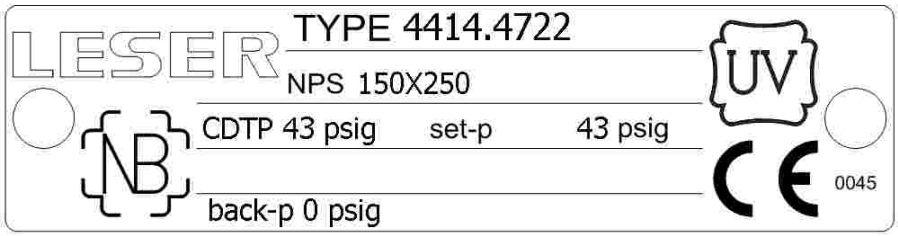
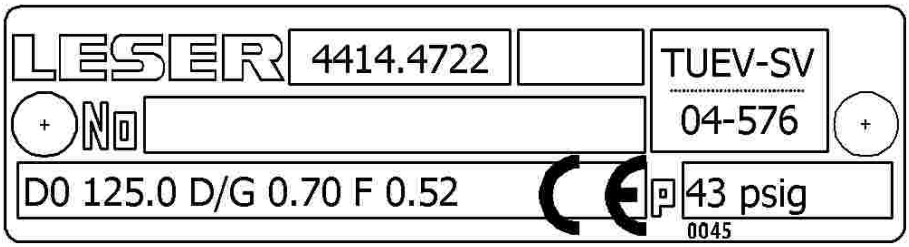
DIN nameplate