Pressure Vessel Engineering Note
For the
1.3-GHz Helium Vessel #4 in Cryomodule 1
(short version referencing Vessel #1 – IND-116)

Authors: M. Wong	Date: 30 June 2010

Table of Contents

Section	Page Number
Pressure vessel engineering note form (FESHM 5031)	**3**
Extended Engineering Note	
Introduction	**7**
Exceptional vessel discussion	**7**
History of CM1	**11**
Description and Identification	**14**
Design Verification	**17**
System Venting Verification	**17**
References	**17**

PRESSURE VESSEL ENGINEERING NOTE

PER FESHM CHAPTER 5031

Prepared by: Mayling Wong
Preparation date: 30 June 2010

1. Description and Identification
Fill in the label information below:

This vessel conforms to Fermilab ES&H Manual Chapter 5031

Vessel Title CM1 Helium Vessel Number 4

Vessel Number IND-119 (Vessel #4)

Vessel Drawing Number DESY 1-98-8427/0.000

Maximum Allowable Working Pressures (MAWP):
Warm Internal Pressure 2.0-bar (29.0-psia)
Cold Internal Pressure 4.0-bar (58.0-psia)
External Pressure 1.0-bar (14.5-psia)

Working Temperature Range -457°F - 100°F

Contents Superfluid helium

Designer/Manufacturer DESY / Accel, Zanon

Test Pressure (if tested at Fermi) Acceptance Date: _____ ←Document per Chapter 5034 of the Fermilab ES&H Manual

_____PSIG, Hydraulic_____ Pneumatic _____

Accepted as conforming to standard by
Giorgio APOLLINARI

of Division/Section Technical Div Date: 7/23/10 ←Actual signature required

NOTE: Any subsequent changes in contents, pressures, temperatures, valving, etc., which affect the safety of this vessel shall require another review.

Reviewed by: _____ Date: 7/12/10

Director's signature (or designee) if the vessel is for manned areas but doesn't conform to the requirements of the chapter.

_____ Date: 7/16/10

_____ Date: 7/23/10

ES&H Director Concurrence

Amendment No.:	Reviewed by:	Date:
_____	_____	_____
_____	_____	_____

Lab Property Number(s): _____
Lab Location Code: FIMS #700 (Muon Beam Enclosure at NML)
Purpose of Vessel(s): Liquid helium containment for nine-cell 1.3-GHz Superconducting radio frequency cavity
Vessel Capacity/Size: 23-L Diameter: 9.3 in (237mm) Length: 50.5in (1.3-m)
Normal Operating Pressure (OP) 0.03-bar (0.37-psia)
MAWP-OP = 28.63 PSID

List the numbers of all pertinent drawings and the location of the originals.

Drawing #	Location of Original
1-98-8427/0.000	DESY
1-98-8427/8.000	DESY

2. Design Verification

Is this vessel designed and built to meet the Code or "In-House Built" requirements?
Yes_____ No__X__.

If "No" state the standard that was used European pressure vessel standard

Demonstrate that design calculations of that standard have been made and that other requirements of that standard have been satisfied.
Skip to part 3 "system venting verification."

Does the vessel(s) have a U stamp? Yes_____ No__X__. If "Yes", complete section 2A; if "No", complete section 2B.

A. Staple photo of U stamp plate below.
Copy "U" label details to the side

Copy data here:
_____
_____
_____
_____
_____
_____
_____

Provide ASME design calculations in an appendix. On the sketch below, circle all applicable sections of the ASME code per Section VIII, Division I. (Only for non-coded vessels)

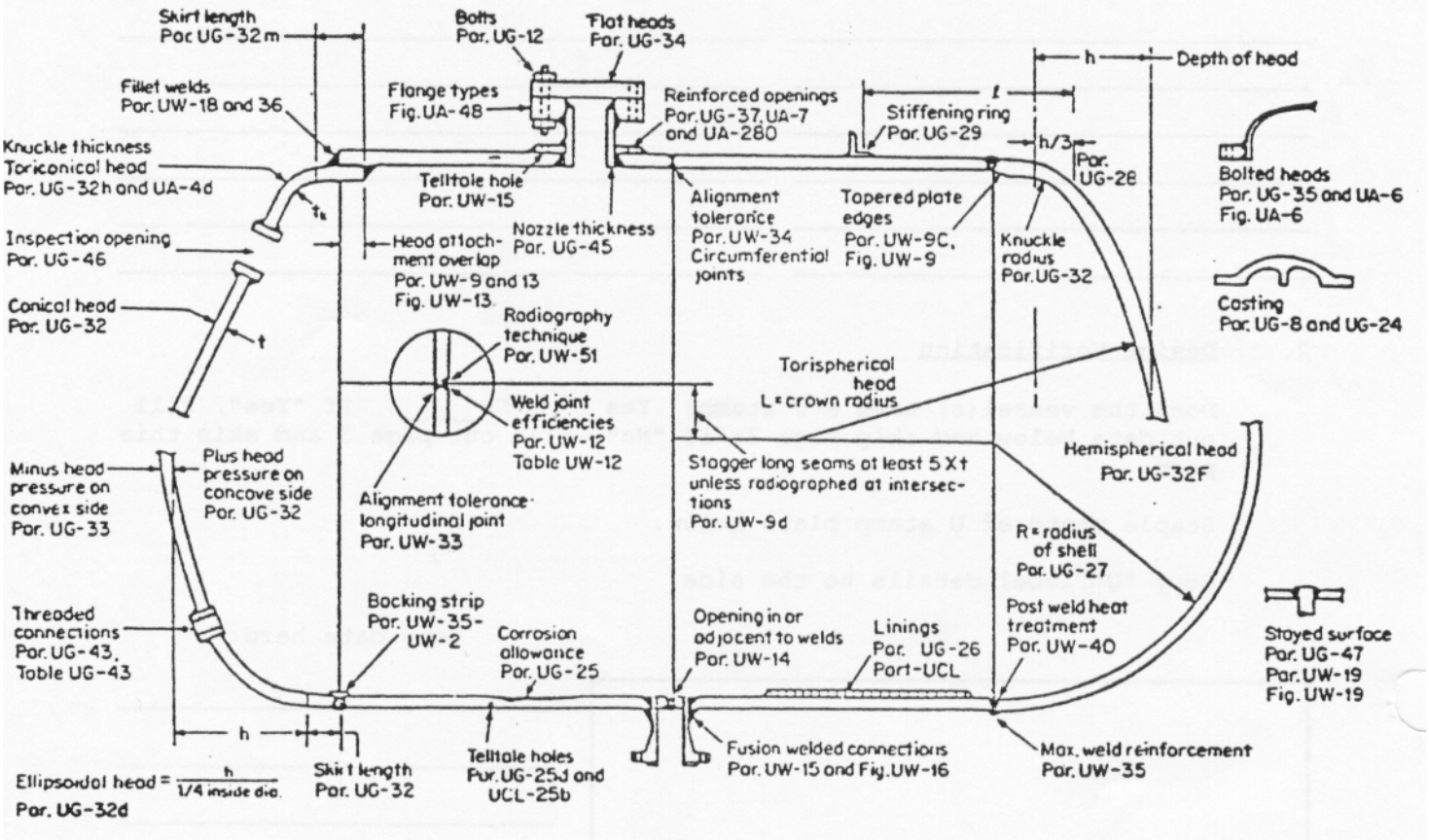

Figure 1. ASME Code: Applicable Sections

2B.

Summary of ASME Code

Item	Reference ASME Code Section	CALCULATION RESULT (Required thickness or stress level vs. actual thickness calculated stress level)
		vs
		vs
		vs
		vs
		vs

3. System Venting Verification Provide the vent system schematic.

Does the venting system follow the Code UG-125 through UG-137?
Yes___ No_X__

Does the venting system also follow the Compressed Gas Association Standards S-1.1 and S-1.3?
Yes __X__ No_____

A "no" response to both of the two proceeding questions requires a justification and statement regarding what standards were applied to verify system venting is adequate.

List of reliefs and settings:

Manufacturer	Model #	Set Pressure	Flow Rate	Size
Leser	4414.4722	43-psig	15,000-SCFM air	6in x8in
Leser	4414.7942	15-psig	1074-SCFM air	2in x3in

4. Operating Procedure

Is an operating procedure necessary for the safe operation of this vessel?
Yes_____ No__X___ (If "Yes", it must be appended)

5. Welding Information

Has the vessel been fabricated in a non-code shop? Yes__X__ No_____
If "Yes", append a copy of the welding shop statement of welder qualification (Procedure Qualification Record, PQR) which references the Welding Procedure Specification (WPS) used to weld this vessel.

6. Existing, Used and Unmanned Area Vessels

Is this vessel or any part thereof in the above categories?
Yes_____ No__X__

If "Yes", follow the requirements for an Extended Engineering Note for Existing, Used and Unmanned Area Vessels.

7. Exceptional Vessels

Is this vessel or any part thereof in the above category?
Yes__X__ No_____

If "Yes", follow the requirements for an Extended Engineering Note for Exceptional Vessels.

Extended Engineering Note for Exceptional Vessel

Introduction

Engineering note IND-119 pertains to Dressed Cavity Z106, or Cavity #4 of Cryomodule #1 (CM1). Cavity #4 is the third of eight 1.3-GHz dressed cavities inside CM1. A dressed cavity is a niobium superconducting RF cavity surrounded by a titanium shell. The shell acts as a vessel that contains superfluid helium so that the helium surrounds the RF cavity at temperatures as low as 1.8-K. The vessel also mechanically supports the cavity and takes part in tuning it. The maximum pressure that the helium can reach is 15.0-psig (2-bar), so the vessel is defined as a Pressure Vessel, according to FESM 5031. [(1)] This engineering note follows the guidelines as presented in FESHM 5031.

Figure 2 shows the cross-section of CM1 (DESY drawing 0-06-8205-0-000). Note how the dressed cavities are numbered. This engineering note pertains to Vessel Number IND-119 (Cavity #4). Figure 3 shows the assembly drawing of the 1.3-GHz dressed cavity for CM1 (DESY drawing 1-98-8427-0.000).

All dressed cavities within CM1 have the same design and purpose. As a result, this engineering note contains only the Exceptional Vessel Discussion and the Description and Identification sections. All other sections, including the history of CM1, the design verification, the system venting verification, and the list of references, refer to engineering note IND-116, which is the note for Cavity #1. This note, along with related documents, is stored online on the ILC Document Management System. The website is:

http://ilc-dms.fnal.gov/Workgroups/CryomoduleDocumentation/CM1folder/he-vessel-folder/

Exceptional Vessel Discussion

Reasons for Exception

Pressure vessels, as defined in FESHM Chapter 5031, are designed and fabricated following the ASME Boiler and Pressure Vessel Code (the Code) [(2)]. The 1.3-GHz dressed cavity as a helium pressure vessel has materials and complex geometry that are not conducive to complete design and fabrication following the Code.

The 1.3-GHz dressed cavities in CM1 were designed at DESY. The fabrication of the cavities took place at various vendors with oversight by DESY personnel. The fabrication took place over a span of many years (1998-2006). The dressed cavities were selected by DESY to be included in the CM1 kit sent to FNAL.

Since the dressed cavities, also known as helium vessels, were designed and built outside of FNAL oversight, detailed information about the vessels are not available. The information that is usually included in a pressure vessel engineering note is not available for the CM1 dressed cavities. The missing information includes detailed engineering drawings, material and fabrication certification by the manufacturer, and pressure test results. However, we show that the vessel is safe in accordance with FESHM 5031. Since the vessel design and fabrication methods cannot exactly follow the guidelines given by the Code, the vessel requires a Director's

Exception. Table 1 lists the specific areas of exception to the Code. In the Reference column, the page numbers and the detailed information are found in document IND-116.

Table 1 – Areas of Exception to the Code

Item or Procedure	Reference	Explanation for Exception	How the Vessel is Safe
Niobium material	Pg 28	Used for its superconducting properties; Not an established material listed by the Code	There has been extensive testing done on the niobium used in the cavity. The Code procedure for determining Div.1 allowable stresses (see Section II, Part D, Mandatory Appendix 1) are conservatively applied to the measured yield and ultimate stresses to establish allowable stresses which are consistent with Code philosophy.
Niobium-Titanium material	Pg 28	Used for as a transition material between niobium and titanium materials for welding purposes; Not an established material listed by the Code	Material properties were provided by the vendor of the material.
No information about the vessel's weld design is available.	Pg 22	Category B joints in titanium must be either Type 1 butt welds (welded from both sides) or Type 2 butt welds (welded from one side with backing strip) only (see the Code, Div. 1, UNF-19(a)).	The evaluation of these welds is based on a weld efficiency of 0.5. This weld efficiency is lower than the lowest efficiency specified by the Code for any weld.
No information about liquid penetrant testing on the titanium sub-assembly is available.	Pg 22	All joints in titanium vessels must be examined by the liquid penetrant method (see the Code, Div. 1, UNF-58(b)).	The evaluation of these welds is based on a weld efficiency of 0.5. This weld efficiency is lower than the lowest efficiency specified by the Code for any weld.
No information about ultrasonically testing the electron beam welds in the niobium and niobium-titanium assemblies is available.	Pg 22	All electron beam welds in any material are required to be ultrasonically examined along their entire length (see the Code, UW-11(e)).	The evaluation of these welds is based on a weld efficiency of 0.5. This weld efficiency is lower than the lowest efficiency specified by the Code for any weld.
No information about radiography inspection on the titanium welds is available.	Pg 22	All titanium welds require radiography inspection (see the Code, UNF-57(b))	The evaluation of these welds is based on a weld efficiency of 0.5. This weld efficiency is lower than the lowest efficiency specified by the Code for any weld.

Table 1 (continued) – Areas of Exception to the Code

Item or Procedure	Reference	Explanation for Exception	How the Vessel is Safe
Calculated stresses for longitudinal weld in titanium bellows exceed allowable stresses.	Pg 37	Calculated stresses must be at or less than allowable stresses. The allowable stresses include a 0.7 weld joint efficiency due to lack of examination results.	The calculated stress does not exceed the allowable stress with a joint efficiency of 1.0. This design of the bellows has been used extensively at DESY for over the past decade.
Calculated stress in the bellows using FEA shows a higher membrane plus bending stress than allowed.	Pg 48	Calculated stresses must be at or less than allowable stresses.	The design of the bellows is addressed by the Code in Div 1, Appendix 26. The sum S_3+S_4 is less than allowed K_fS (see pg 37).
Use of enhanced material properties at cryogenic temperatures in stress analysis	Pg 28	Titanium is not a material with established material properties at temperatures less than 38°C by the Code (see the Code, ULT-5(b))	Published material properties for titanium (outside the Code) at cryogenic temperatures were used.
Weld documents, including the WPS, PQR, or WPQ, are not available.	Pg 28	All welds must follow the rules of specifying the weld procedure, qualifying the weld procedure, and qualifying the welder according to Part UW, which refers to the Code, Sec. IX.	• The evaluation of these welds is based on a weld efficiency of 0.5. This weld efficiency is lower than the lowest efficiency specified by the Code for any weld. • The RF performance of the niobium cavity is acceptable, showing indirectly that all welds in the cavity are full penetration
Pressure test results are not available.	Pg 44, Table 9	All Exceptional Vessels require a pressure test, according to FESHM 5034.	The analysis shows that the stresses in the vessel, when pressurized at room temperature (Load Case No. 1), are within the allowable stress.

Analysis and use of the ASME Code

The extended engineering note presents the results of the analysis that was performed on the entire vessel.

Analytical Tools

Analysis was done using ANSYS Workbench 11.

Fabrication

The cavity processing data for each cavity is available online at the DESY database:

http://tesla-new.desy.de/cavity_database/summaries/

Included in the processing data for each cavity are material properties of the niobium. However, no material certifications for the niobium are available by the cavity manufacturer. No material data exists for the niobium-titanium parts.

Regarding the niobium-titanium parts, the titanium parts and the entire vessel assembly, weld specifications, welder qualifications, or weld samples from the manufacturer are not available. Material certifications for these items are not available. Inspection results are not available.

Hazard Analysis

When in operation as part of CM1, the 1.3-GHz dressed cavity is completely contained within a multilayered vessel that protects personnel. The 5K aluminum thermal shield completely surrounds the dressed cavity. The 70K aluminum thermal shield, in turn, completely surrounds the 5K shield. The shields sit within the carbon steel vacuum vessel. From a personnel safety standpoint, the dressed cavity is well contained within the CM1 vacuum vessel.

Two relief valves vent any helium spill from the dressed cavity. The section titled "System Venting Verification" details the venting analysis in this engineering note.

Pressure Test

No pressure tests for the individual dressed cavities were performed, so no pressure test results exist. However, every dressed cavity successfully performed at operating pressures and temperatures during horizontal testing at DESY.

Additional Information

The design for the dressed cavities utilized in CM1 has been proven at DESY and used in a number of facilities. More than 100 dressed cavities of this design have been built and tested. Many of them have been used in the cryomodules presently installed in the TESLA Test Facility (TTF).

The design will be used in the cryomodules for the European XFEL facility. As part of the preparations for building the XFEL cryomodules, DESY performed several pressure tests on a cryomodule to demonstrate compliance with European safety standards and to understand the design safety factor. [(3)] The Module Crash Test was a series of pressure tests. The first test took place while the cavities were at 2K. The dressed cavities began the test at operating conditions (2K and 30-mbar). The pressure in the 2K helium circuit was then increased to 6.1-bar without an increase in the cavity pressure or leak rate. The cavity did not experience plastic deformation during the cold test, only elastic deformations. The second and third tests took place with the cavities at room temperature and at 1-bar. The pressure in the helium circuit was increased to

5.3-bar without plastic deformations in both tests. A fourth test took place with the cavities at 2K. Again, the helium pressure was increased to over 6-bar without problems. The results show that the cavities are safe within the warm MAWP of 2-bar and cold MAWP of 4-bar. The next step for the XFEL cryomodule will be to create a simple test procedure as part of certifying the dressed cavity according to the European pressure vessel safety standard (TÜV).

In another set of tests in the Module Crash Test, air was leaked into different parts of the cryomodule in order to mimic fault conditions such as the sudden loss of insulating vacuum or venting of the cavity vacuum to air. [(4)] For this series of tests, the cavities began the test cold and with a vacuum pulled in the cavity. Either the insulating vacuum or the cavity vacuum was let up to air. The maximum pressures in the 2K helium circuit, the 5K helium circuit, and the nitrogen circuit were then measured. The temperature of the helium vessel during the test was also monitored. The air heat flow and average heat transfer densities estimated based on measurements of the test. Despite the catastrophic nature of the venting scenarios, the maximum pressures that were measured were less than the design pressure for each of the cryogen circuits, proving that the design of the system is safe.

History of CM1

Refer to Engineering Note IND-116.

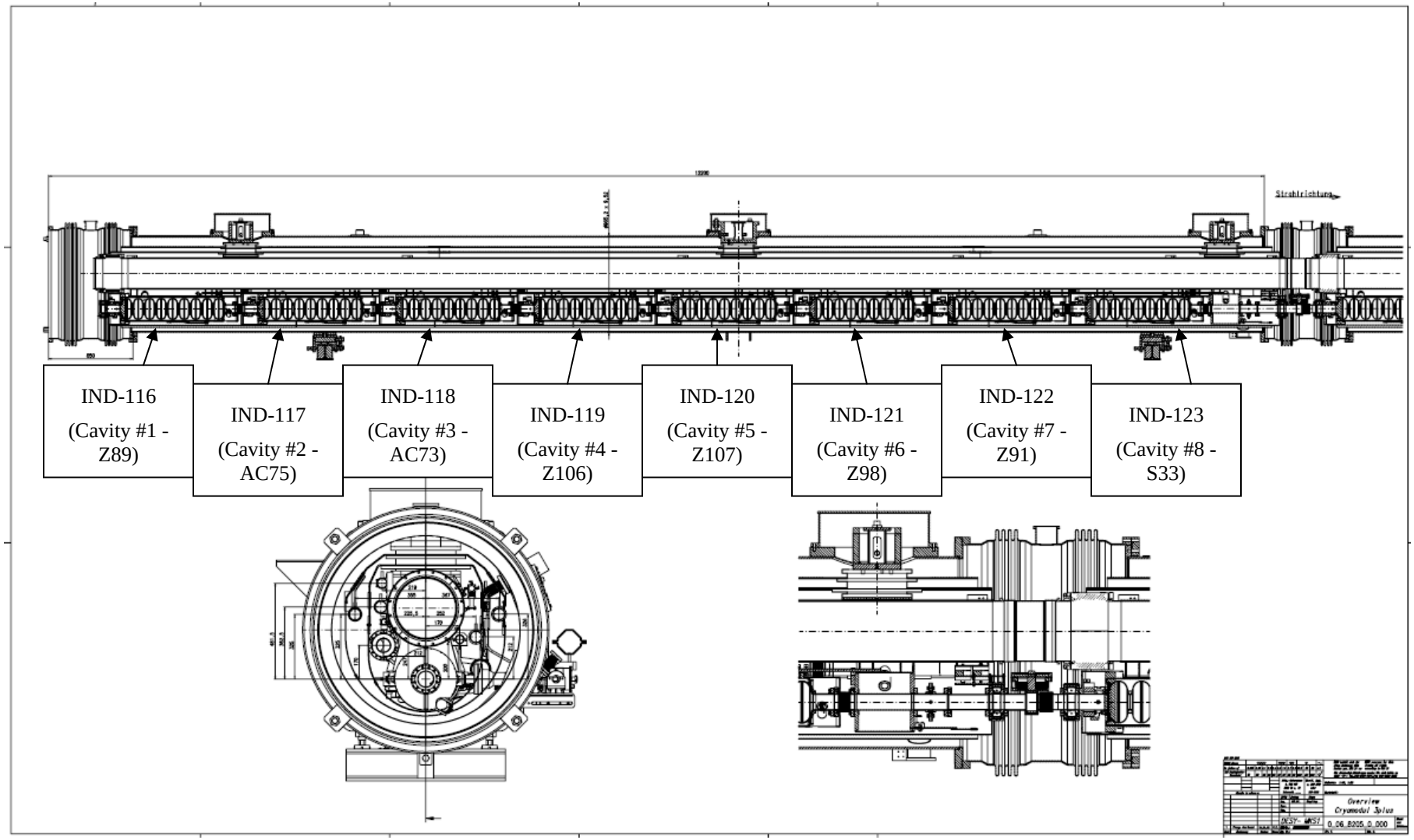

Figure 2 – Cross Section of CM1 (DESY drawing 0-06-8205-0-000)

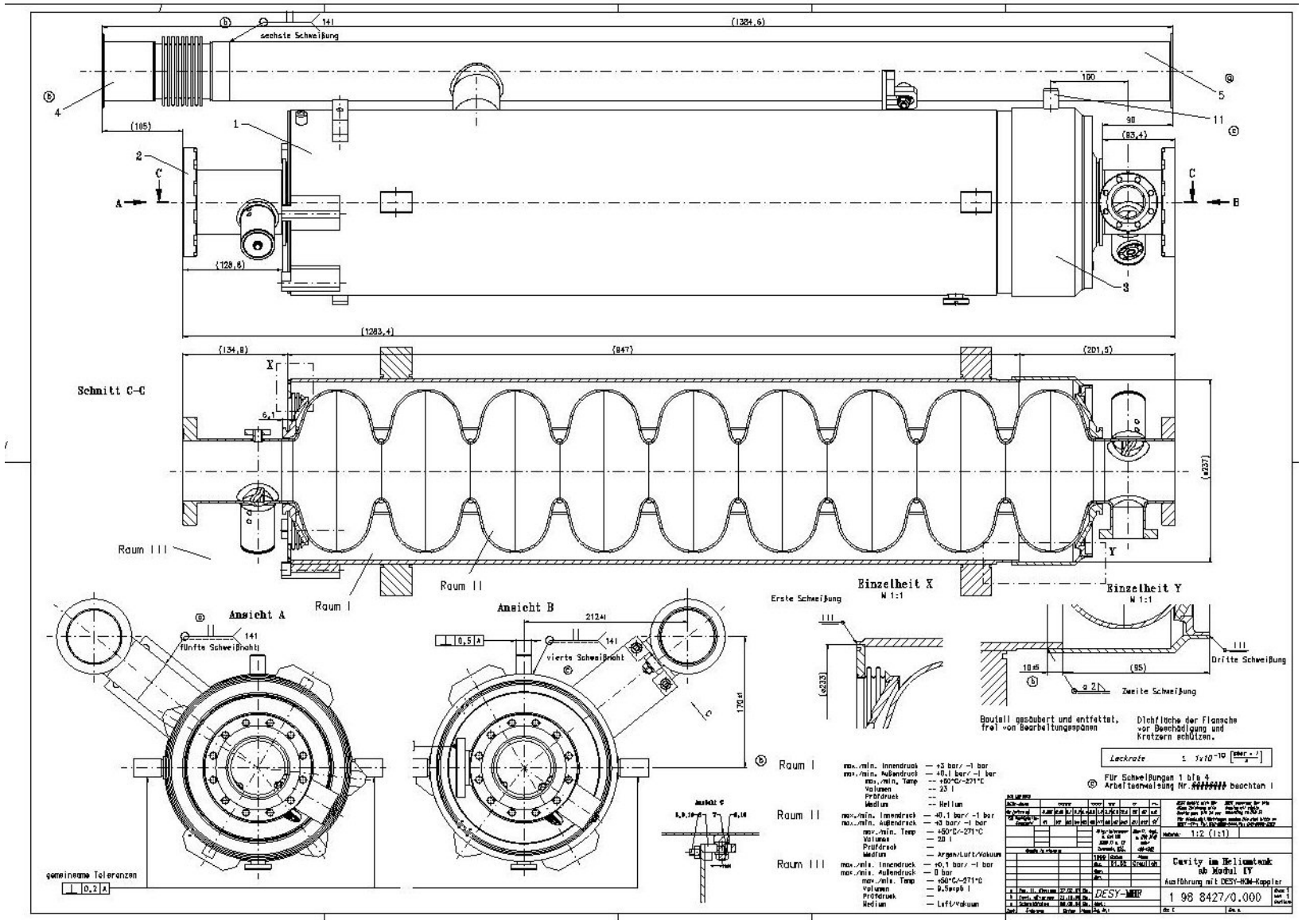

Figure 3 – 1.3-GHz Dressed Cavity for CM1 (DESY drawing 1-98-8427-0.000)

Description and Identification

CM1 contains a string of eight dressed cavities. The fourth dressed cavity in the string ("Cavity #4") is arbitrarily named pressure vessel number IND-119. Table 2 identifies the cavity number, with the corresponding Fermilab pressure vessel number and the DESY label. Table 2 also lists the year that the bare cavity was manufactured.

Table 2 – Cavity Identification Numbers

Cavity No.	Fermilab Pressure Vessel No.	DESY Label	Manufacturing Year
1	IND-116	Z89	2005
2	IND-117	AC75	2001
3	IND-118	AC73	2001
4	IND-119	Z106	2006
5	IND-120	Z107	2005
6	IND-121	Z98	2005
7	IND-122	Z91	2005
8	IND-123	S33	1998

The top assembly drawing of the assembly, DESY drawing 1-98-8427-0.000, is shown in Figure 3. The dressed cavity consists essentially of two sub-assemblies: the niobium SRF cavity and the titanium helium vessel.

Since the dressed cavities of CM1 were designed and fabricated at DESY, detailed drawings of the assembly are not available. However, a 3D model is available, so nominal dimensions of the parts are taken from it.

The niobium SRF cavity is an elliptical nine-cell assembly. A drawing of the nine-cell cavity is shown in Figure 4 (DESY drawing 1-98-8427/8.000). The cavity assembly consists of the niobium RF cavity and the end units. A single cell, or a dumbbell, consists of two half-cells that are welded together at the equator of the cell. Rings between the cells stiffen the assembly to a point. Some flexibility in the length of the nine-cell cavity is required to tune the cavity and optimize its resonance frequency. The end units each consist of a half cell, an end disk flange, and a transition flange. The transition flange is made of a titanium-niobium alloy. A titanium bellows assembly is attached to the longer end unit. The iris' minimum inner diameter is 35-mm (1.4-in), and the maximum diameter of a dumbbell is 211.1-mm (8.3-in). The length of the cavity, flange-to-flange, is 1247.4-mm (49.1-in.).

The titanium helium vessel encases the niobium SRF cavity. The inner diameter of the cylindrical part of the vessel is roughly 237-mm (9.3-in.). The shell is welded to the bellows on one end and to the cavity's niobium-titanium end cap disk at the other end. The vessel has a helium fill port at the bottom. Close to the top of the vessel is the two-phase helium return line. At the sides of the vessel are tabs which support the vessel within the CM1 vacuum vessel. The vessel is flexible in length due to a bellows at the middle of its length. This flexibility in the vessel allows for accommodating the change in the nine-cell cavity length due to thermal contraction at cryogenic temperature and to turning the cavity during operation. A titanium bellows allows for adjusting the cavity length. A slow-control tuner system that consists of a stepper motor that changes the vessel length to accommodate thermal shrinkage.

The vessel contains liquid helium at 2K during operating. The vessel's operating pressure is 30-mbar internal. The vessel's internal maximum allowable working pressure (MAWP) is 2.0-bar (15.0-psig) at room temperature. At the operating temperature of 2K, the vessel's internal MAWP is 4.0-bar (43.3-psig). The increased strength of the materials at the cryogenic temperature allows for a higher MAWP.

The external MAWP of the vessel is 1.0-bar (0-psig).

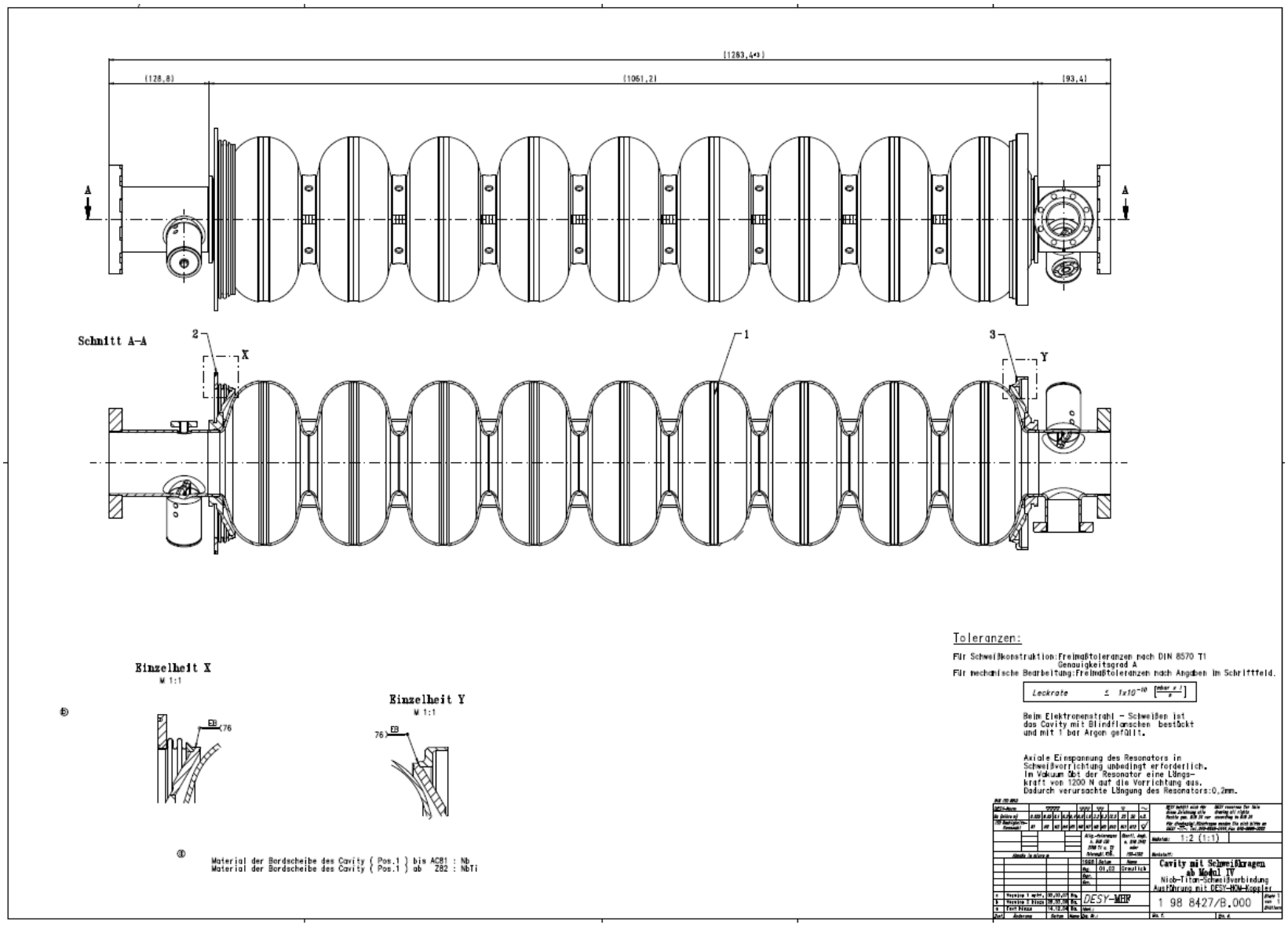

Figure 4 – RF Cavity Assembly (DESY drawing 1-98-8427/8.000)

Design Verification

Please refer to Engineering Note IND-116.

System Venting Verification

Please refer to Engineering Note IND-116.

References

Please refer to Engineering Note IND-116.