REVISION HISTORY CAD MAINTAINED. CHANGES SHALL BE INCORPORATED BY THE DESIGN ACTIVITY.				
ZONE	REV	DESCRIPTION	DATE	APPROVED
	A	INITIAL RELEASE		

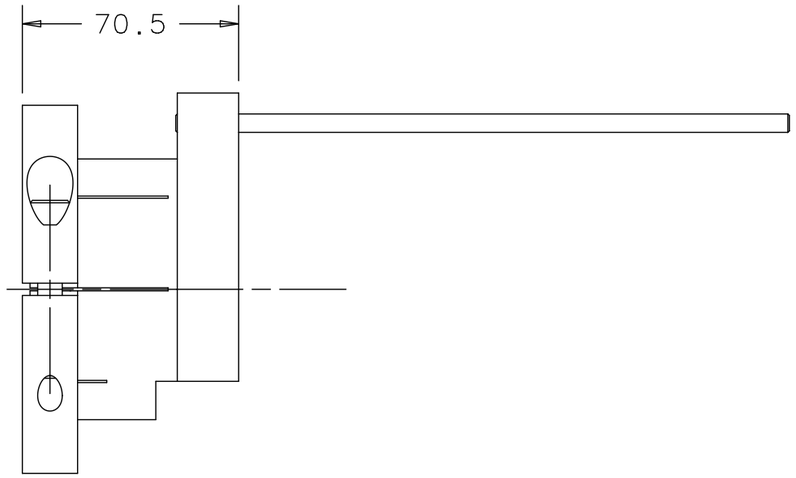

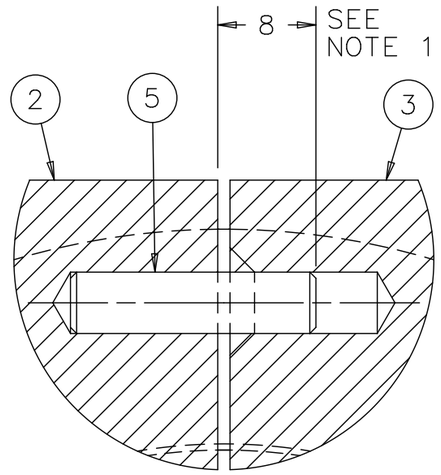

VIEW A
SCALE 2/1

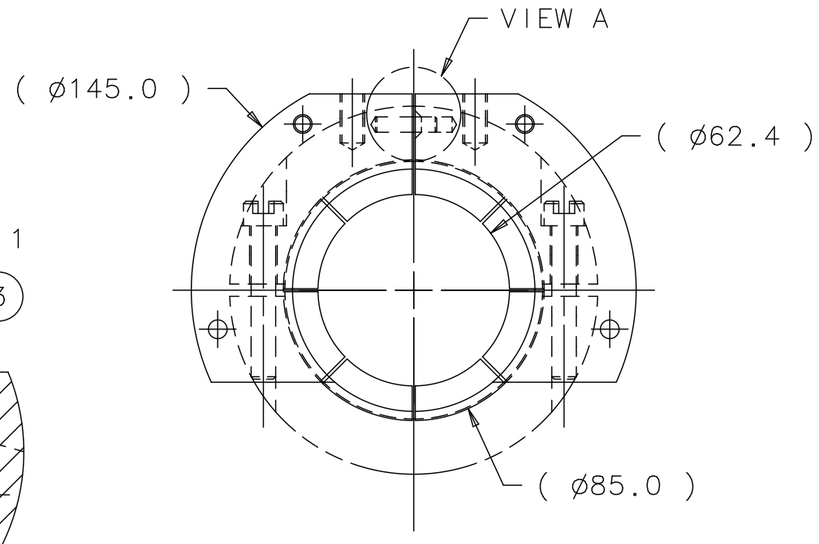

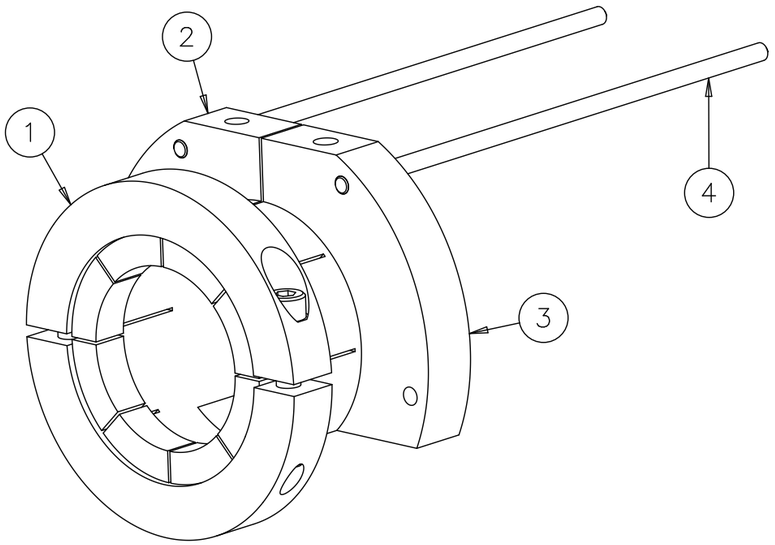

ISOMETRIC VIEW

ITEM	P.I.N.	DESCRIPTION	QTY
5	COM'L	ø5 X 20MM LONG-DOWEL PIN STAINLESS STEEL	1
4	COM'L	M6 X 200MM LONG-THREADED ROD STAINLESS STEEL	2
3	730091	FLANGE_EXTENSION_B	1
2	730081	FLANGE_EXTENSION_A	1
1	730101	INTERCEPT_4-5K_MC_CLAMP	1

PARTS LIST

NOTES:

1. ITEM # 5 (DOWEL PIN), IS PRESSED INTO ITEM # 2 (FLANGE EXTENSION A) TO HEIGHT SHOWN.

FINISH N/A	UNLESS OTHERWISE SPECIFIED: DIMENSIONS ARE IN MILLIMETERS INTERPRET DIM PER ASME Y14.5M-1994 BREAK ALL SHARP EDGES .75 MAX. ALL MACH. SURFACES 3.2 MAX.	DRAWN BY J.MONTELONGO	DATE 23AUG06
		CHECKED BY CHUCK GRIMM	DATE 28SEP06
		ENGINEERED BY DON MITCHELL	DATE 28SEP06
MATERIAL SEE PARTS LIST	TOLERANCES X ± 2 .X ± 0.8 .XX ± 0.13 ANGLE ± 1°	THIRD ANGLE PROJECTION	
		DATABASE DESY EDMS	TEAM/GROUP T4CM DESIGN
		CAD I-DEAS	SOLID MODEL NO. D00000000557303

FERMI NATIONAL ACCELERATOR LABORATORY
UNITED STATES DEPARTMENT OF ENERGY
P.O. BOX 500, BATAVIA, IL 60510-0500

TITLE
ILC-SRF CRYOMODULE
4.5K INTERCEPT
INTERCEPT_4-5K_MC

SIZE	CAGE CODE	DWG NO.	REV
A3	0U5R6	D00000000729431	A

SCALE 1:2 | DO NOT SCALE DWG | SHEET 1 OF 1

Created: 14:23:42 on 09-06-09 (D-M-Y) By: orlov State: 1-4INITIAL

REVISION HISTORY CAD MAINTAINED. CHANGES SHALL BE INCORPORATED BY THE DESIGN ACTIVITY.				
ZONE	REV	DESCRIPTION	DATE	APPROVED
	A	INITIAL RELEASE		

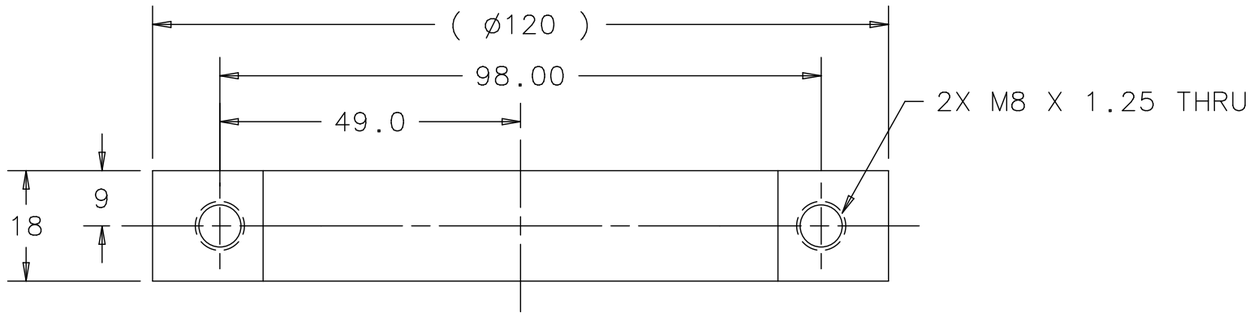

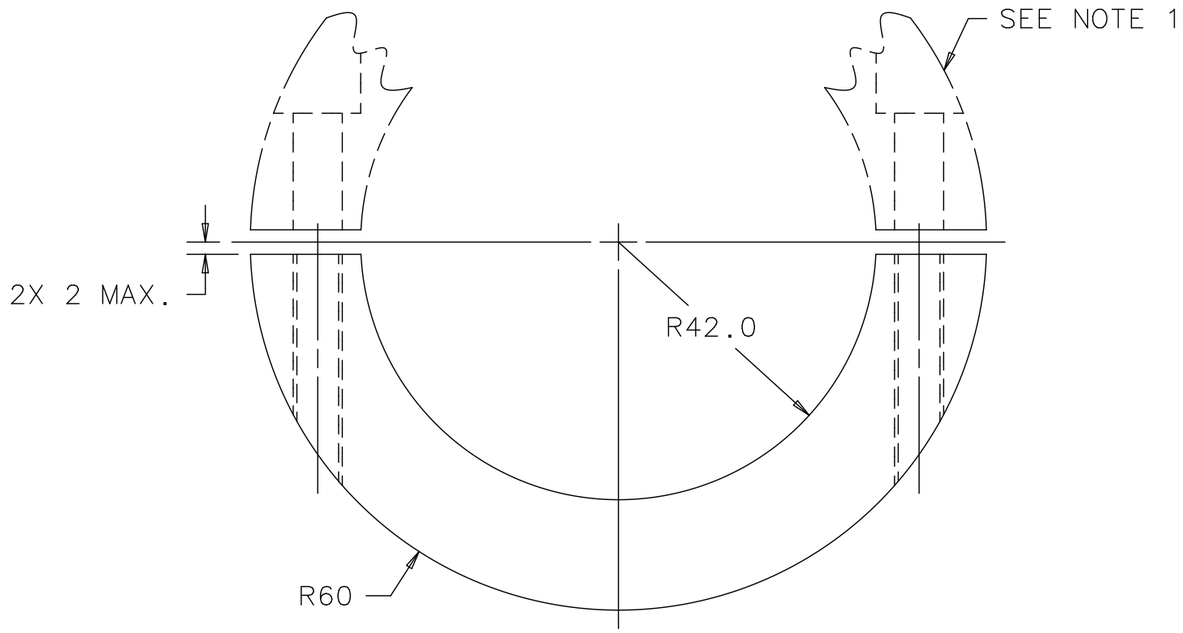

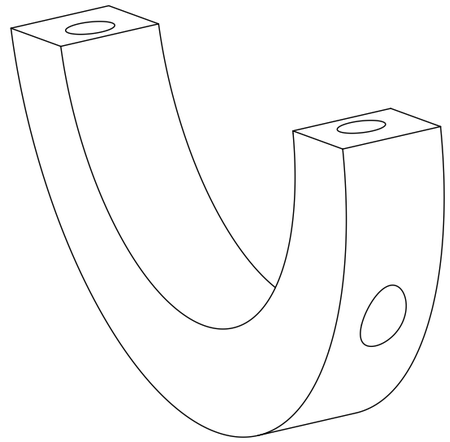

ISOMETRIC VIEW

NOTES:

1. PART MAY BE FABRICATED TOGETHER W/730071 (CLAMP HALF RING B) & SAW-CUT TO PRODUCE FINAL PIECES AS REQUIRED PER DWG. 730101 (INTERCEPT 4-5K MC CLAMP).

FINISH N/A	UNLESS OTHERWISE SPECIFIED: DIMENSIONS ARE IN MILLIMETERS INTERPRET DIM PER ASME Y14.5M-1994 BREAK ALL SHARP EDGES .75 MAX. ALL MACH. SURFACES 3.2 MAX.	DRAWN BY J.MONTELONGO	DATE 23AUG06
		CHECKED BY CHUCK GRIMM	DATE 28SEP06
		ENGINEERED BY DON MITCHELL	DATE 28SEP06
MATERIAL ALUMINUM 6061-T6	TOLERANCES: X ± 2, .X ± 0.8, .XX ± 0.13, ANGLE ± 1°	DATABASE DESY EDMS	TEAM/GROUP T4CM DESIGN
	THIRD ANGLE PROJECTION	CAD I-DEAS	SOLID MODEL NO. D00000000634392

FERMI NATIONAL ACCELERATOR LABORATORY
UNITED STATES DEPARTMENT OF ENERGY
P.O. BOX 500, BATAVIA, IL 60510-0500

TITLE
ILC-SRF CRYOMODULE
4.5K INTERCEPT
CLAMP_HALF-RING_A

SIZE	CAGE CODE	DWG NO.	REV
A3	0U5R6	D00000000730061	A
SCALE 1:1	DO NOT SCALE DWG	SHEET 1 OF 1	

Created: 15:17:29 on 09-06-09 (D-M-Y) By: orlov State: 1-4NITIAL

REVISION HISTORY CAD MAINTAINED. CHANGES SHALL BE INCORPORATED BY THE DESIGN ACTIVITY.				
ZONE	REV	DESCRIPTION	DATE	APPROVED
	A	INITIAL RELEASE		

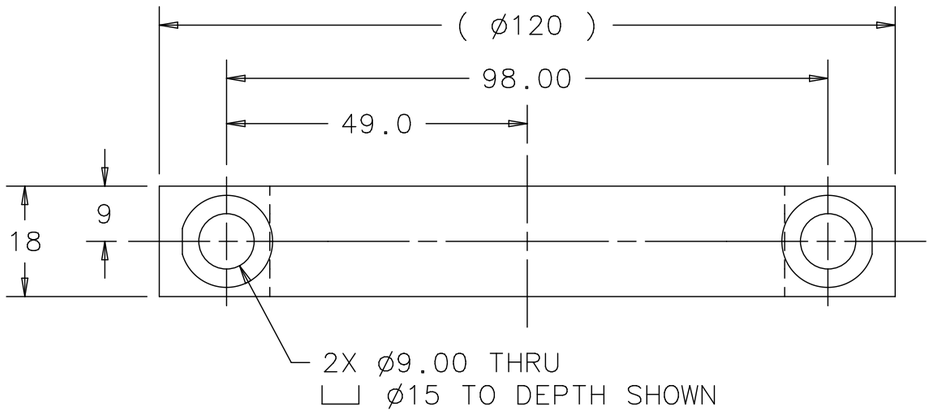

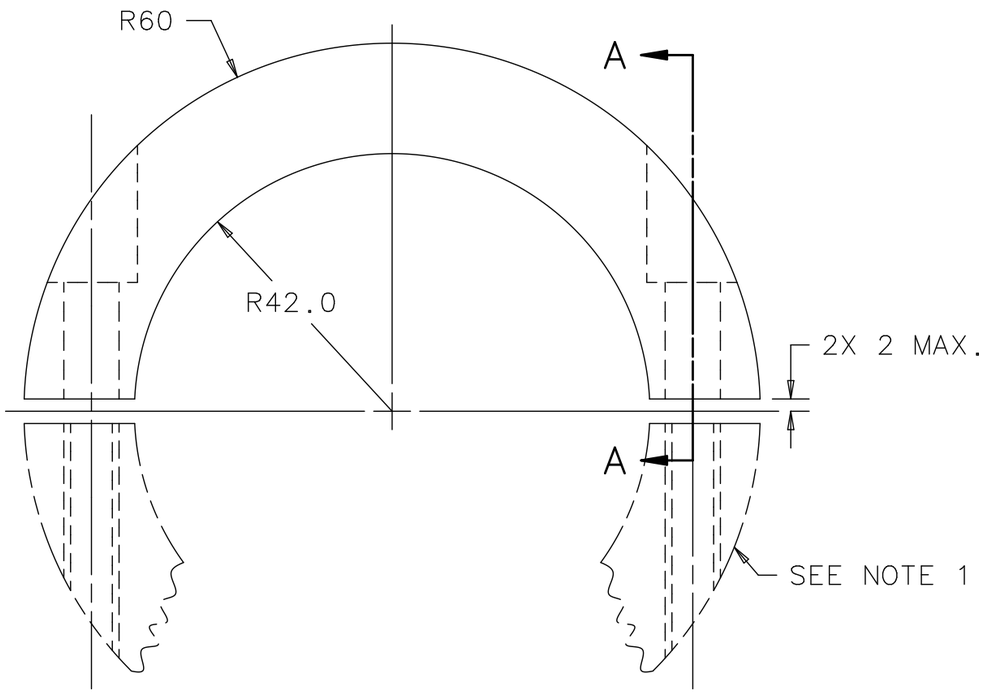

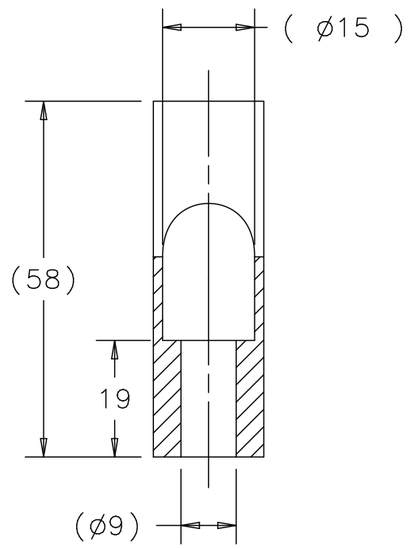

SECTION A-A

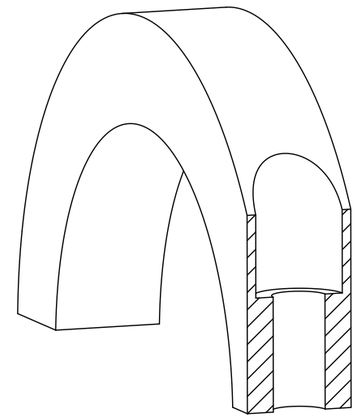

ISOMETRIC VIEW

NOTES:

1. PART MAY BE FABRICATED TOGETHER W/730061 (CLAMP HALF RING A) & SAW-CUT TO PRODUCE FINAL PIECES AS REQUIRED PER DWG. 730101 (INTERCEPT 4-5K MC CLAMP).

FINISH N/A	UNLESS OTHERWISE SPECIFIED: DIMENSIONS ARE IN MILLIMETERS INTERPRET DIM PER ASME Y14.5M-1994 BREAK ALL SHARP EDGES .75 MAX. ALL MACH. SURFACES 3.2 MAX.	DRAWN BY J.MONTELONGO	DATE 23AUG06
		CHECKED BY CHUCK GRIMM	DATE 28SEP06
		ENGINEERED BY DON MITCHELL	DATE 28SEP06
MATERIAL ALUMINUM 6061-T6	TOLERANCES X ± 2 .X ± 0.8 .XX ± 0.13 ANGLE ± 1°	THIRD ANGLE PROJECTION	
		DATABASE DESY EDMS	TEAM/GROUP T4CM DESIGN
		CAD I-DEAS	SOLID MODEL NO. D00000000634382

FERMI NATIONAL ACCELERATOR LABORATORY
UNITED STATES DEPARTMENT OF ENERGY
P.O. BOX 500, BATAVIA, IL 60510-0500

TITLE
ILC-SRF CRYOMODULE
4.5K INTERCEPT
CLAMP_HALF-RING_B

SIZE	CAGE CODE	DWG NO.	REV
A3	0U5R6	D00000000730071	A
SCALE 1:1	DO NOT SCALE DWG	SHEET 1 OF 1	

REVISION HISTORY CAD MAINTAINED. CHANGES SHALL BE INCORPORATED BY THE DESIGN ACTIVITY.				
ZONE	REV	DESCRIPTION	DATE	APPROVED
	A	INITIAL RELEASE		

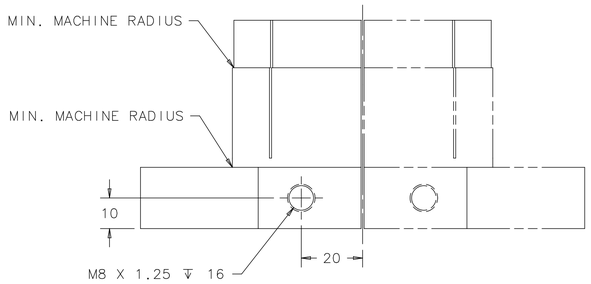

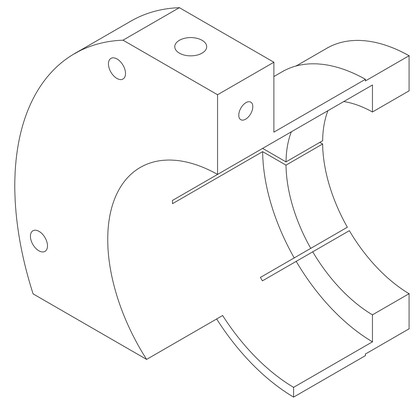

ISOMETRIC VIEW
NOT TO SCALE

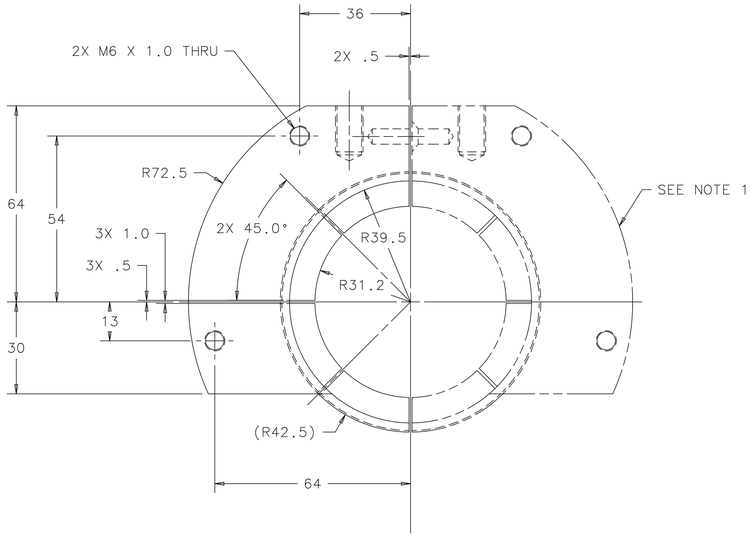

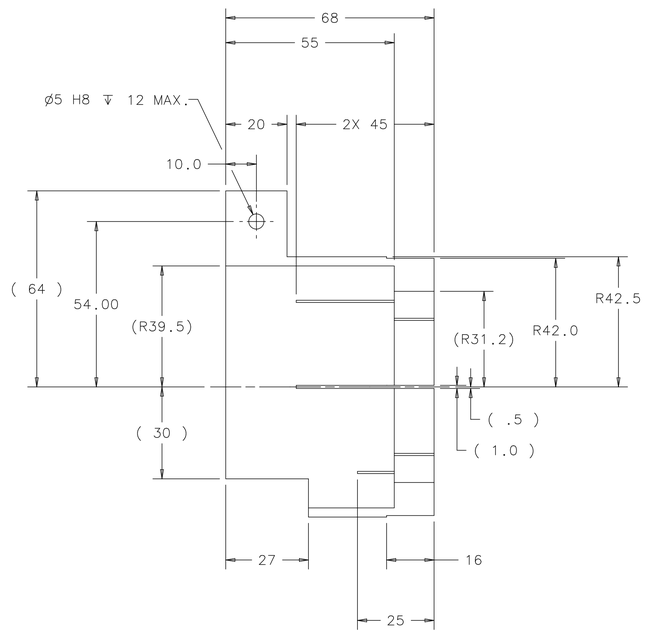

NOTES:

1. PART MAY BE FABRICATED TOGETHER W/730091 (FLANGE EXTENSION B) & SAW-CUT TO PRODUCE FINAL PIECES AS REQUIRED PER DWG. 729431 (INTERCEPT 4-5K MC).

FINISH N/A	UNLESS OTHERWISE SPECIFIED: DIMENSIONS ARE IN MILLIMETERS INTERPRET DIM PER ASME Y14.5M-1994 BREAK ALL SHARP EDGES .75 MAX. ALL MACH. SURFACES 3.2 MAX.	DRAWN BY J.MONTELONGO	DATE 24AUG06	FERMI NATIONAL ACCELERATOR LABORATORY UNITED STATES DEPARTMENT OF ENERGY P.O. BOX 500, BATAVIA, IL 60510-0500
		CHECKED BY CHUCK GRIMM	DATE 28SEP06	TITLE
		ENGINEERED BY DON MITCHELL	DATE 28SEP06	ILC-SRF CRYOMODULE 4.5K INTERCEPT FLANGE_EXTENSION_A
MATERIAL ALUMINUM 6061-T6	TOLERANCES X ± 2 .X ± 0.8 .XX ± 0.13 ANGLE ± 1°	DATABASE DESY EDMS	TEAM/GROUP T4CM DESIGN	
	THIRD ANGLE PROJECTION	CAD I-DEAS	SOLID MODEL NO. D00000000634372	SIZE A1 / CAGE CODE 0U5R6 / DWG NO. D00000000730081 / REV A
				SCALE 1:1 / DO NOT SCALE DRAWING / SHEET 1 OF 1

REVISION HISTORY CAD MAINTAINED. CHANGES SHALL BE INCORPORATED BY THE DESIGN ACTIVITY.				
ZONE	REV	DESCRIPTION	DATE	APPROVED
	A	INITIAL RELEASE		

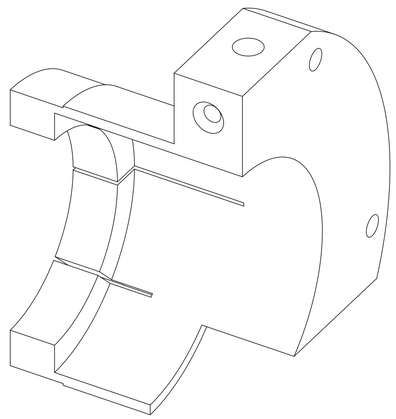

ISOMETRIC VIEW
NOT TO SCALE

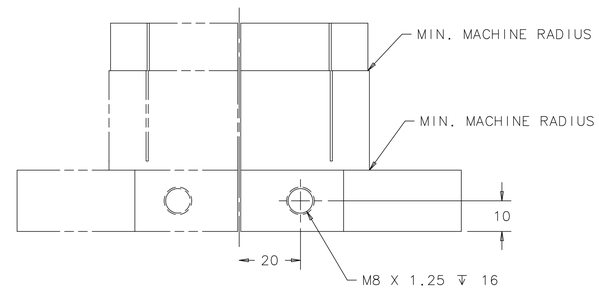

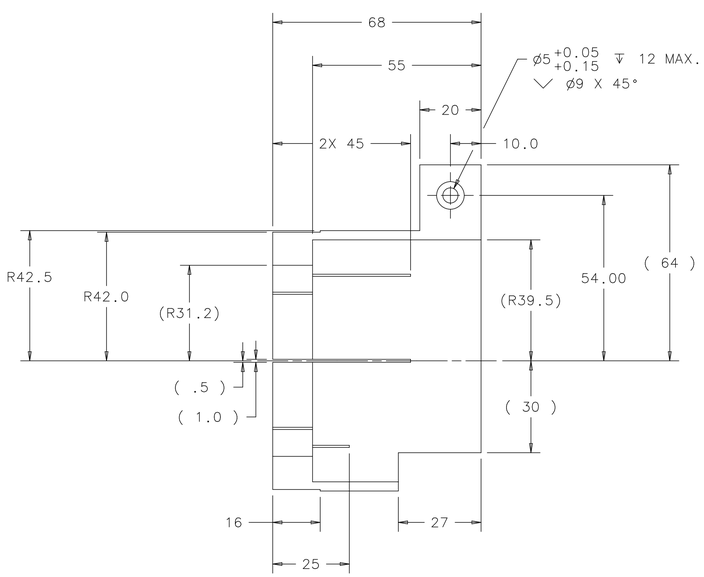

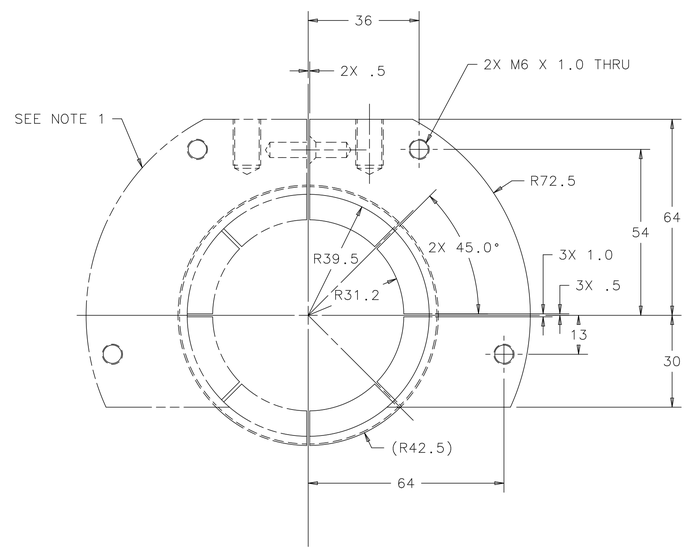

NOTES:

1. PART MAY BE FABRICATED TOGETHER W/730081 (FLANGE EXTENSION A) & SAW-CUT TO PRODUCE FINAL PIECES AS REQUIRED PER DWG. 729431 (INTERCEPT 4-5K MC).

FINISH N/A	UNLESS OTHERWISE SPECIFIED: DIMENSIONS ARE IN MILLIMETERS INTERPRET DIM PER ASME Y14.5M-1994 BREAK ALL SHARP EDGES .75 MAX. ALL MACH. SURFACES 3.2 MAX.	DRAWN BY J.MONTELONGO	DATE 24AUG06	FERMI NATIONAL ACCELERATOR LABORATORY UNITED STATES DEPARTMENT OF ENERGY P.O. BOX 500, BATAVIA, IL 60510-0500
		CHECKED BY CHUCK GRIMM	DATE 28SEP06	TITLE
		ENGINEERED BY DON MITCHELL	DATE 28SEP06	ILC-SRF CRYOMODULE 4.5K INTERCEPT FLANGE_EXTENSION_B
MATERIAL ALUMINUM 6061-T6	TOLERANCES X ± 2 .X ± 0.8 .XX ± 0.13 ANGLE ± 1°	DATABASE DESY EDMS	TEAM/GROUP T4CM DESIGN	
	THIRD ANGLE PROJECTION	CAD I-DEAS	SOLID MODEL NO. D00000000634362	SIZE A1 / CAGE CODE 0U5R6 / DWG NO. D00000000730091 / REV A
				SCALE 1:1 / DO NOT SCALE DRAWING / SHEET 1 OF 1

REVISION HISTORY CAD MAINTAINED. CHANGES SHALL BE INCORPORATED BY THE DESIGN ACTIVITY.				
ZONE	REV	DESCRIPTION	DATE	APPROVED
	A	INITIAL RELEASE		
B3	B	ECO# ILC-000159 ITEM 3 WAS 25MM LNG	02-APR-12	Y.ORLOV

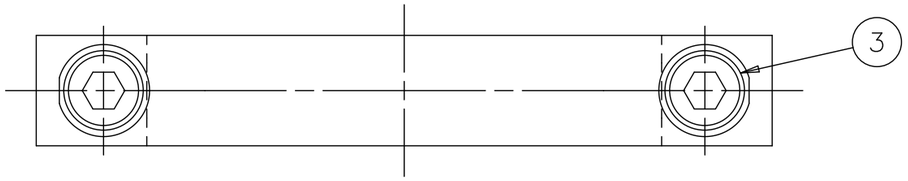

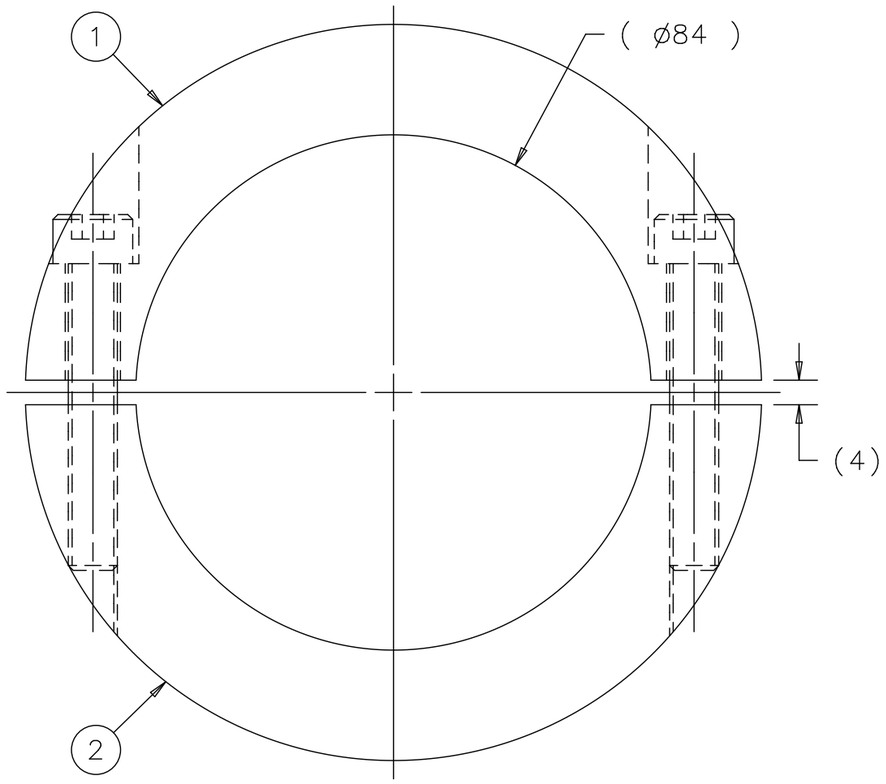

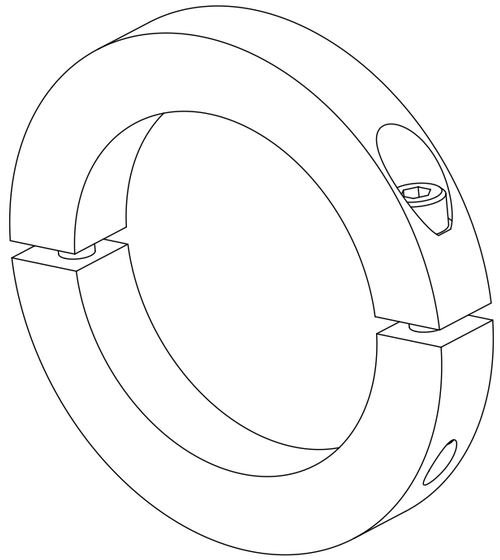

ITEM	P.I.N.	DESCRIPTION	QTY
3	COM'L	M8 X 50MM LONG SHCS STAINLESS STEEL	2
2	730061	CLAMP_HALF-RING_A	1
1	730071	CLAMP_HALF-RING_B	1

PARTS LIST

FINISH N/A	UNLESS OTHERWISE SPECIFIED: DIMENSIONS ARE IN MILLIMETERS INTERPRET DIM PER ASME Y14.5M-1994 BREAK ALL SHARP EDGES .75 MAX. ALL MACH. SURFACES 3.2 MAX.	DRAWN BY J.MONTELONGO	DATE 23AUG06
		CHECKED BY CHUCK GRIMM	DATE 28SEP06
		ENGINEERED BY DON MITCHELL	DATE 28SEP06
MATERIAL SEE PARTS LIST	TOLERANCES X ± 2 .X ± 0.8 .XX ± 0.13 ANGLE ± 1°	THIRD ANGLE PROJECTION	
		DATABASE DESY EDMS	TEAM/GROUP T4CM DESIGN
		CAD I-DEAS	SOLID MODEL NO. D00000000557963

FERMI NATIONAL ACCELERATOR LABORATORY
UNITED STATES DEPARTMENT OF ENERGY
P.O. BOX 500, BATAVIA, IL 60510-0500

TITLE
ILC-SRF CRYOMODULE
4.5K INTERCEPT
INTERCEPT_4-5K_MC_CLAMP

SIZE	CAGE CODE	DWG NO.	REV
A3	0U5R6	D00000000730101	B

SCALE 1:1 | DO NOT SCALE DWG | SHEET 1 OF 1

REVISION HISTORY CAD MAINTAINED. CHANGES SHALL BE INCORPORATED BY THE DESIGN ACTIVITY.				
ZONE	REV	DESCRIPTION	DATE	APPROVED
	A	INITIAL RELEASE ER ILC-000061		

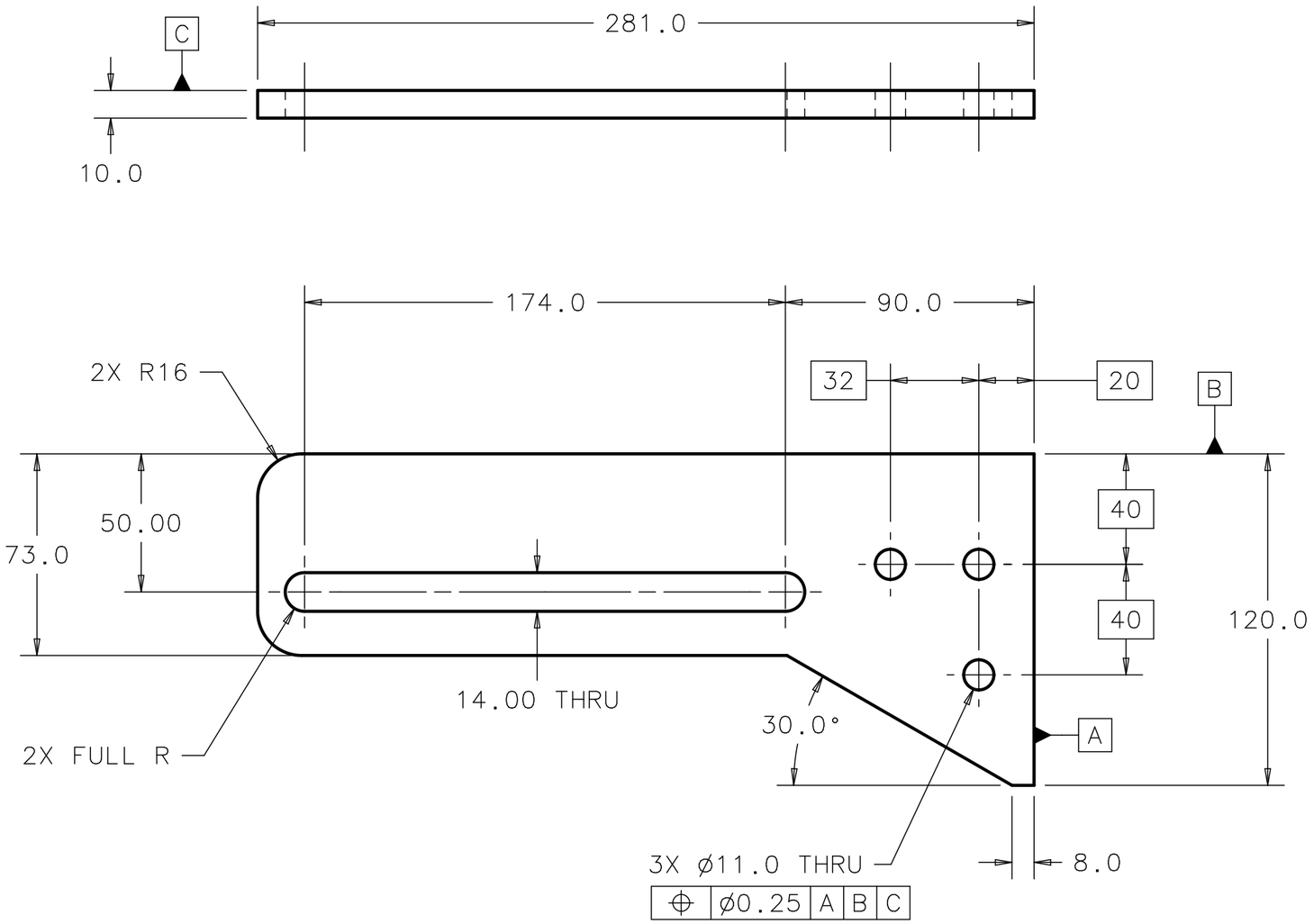

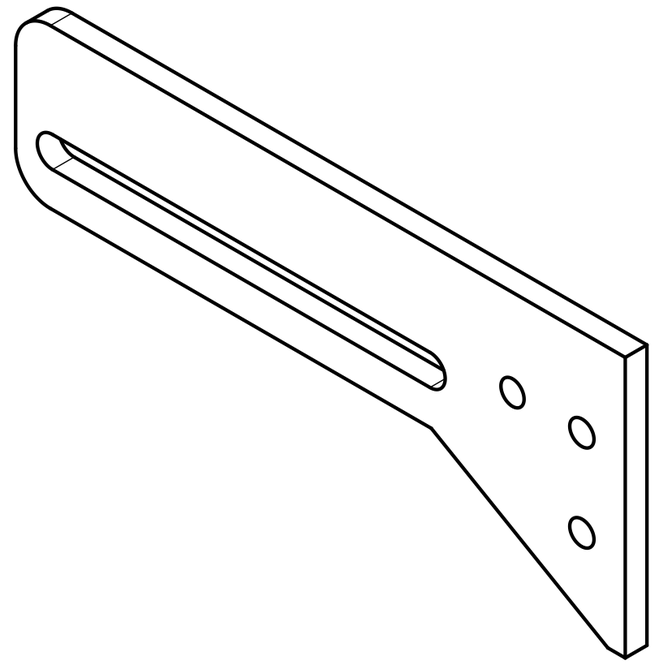

NOTES (UNLESS OTHERWISE SPECIFIED):

1. PART MUST BE FREE OF DIRT, GREASE, OIL AND CHIPS.
2. PART TO BE FREE OF ALL SHARP EDGES, CORNERS, AND BURRS.

737051	737101
736181	734851
NEXT ASSY	USED ON
APPLICATION	

FINISH N/A	UNLESS OTHERWISE SPECIFIED: DIMENSIONS ARE IN MILLIMETERS INTERPRET DIM PER ASME Y14.5M-1994 BREAK ALL SHARP EDGES 0.75 MAX. ALL MACH. SURFACES 3.2 MAX.	DRAWN BY J.MONTELONGO	DATE 24AUG06	FERMI NATIONAL ACCELERATOR LABORATORY UNITED STATES DEPARTMENT OF ENERGY P.O. BOX 500, BATAVIA, IL 60510-0500
		CHECKED BY C.GRIMM	DATE 03FEB10	TITLE ILC TYPE IV CRYOMODULE MAIN COUPLER SLOTTED_BRACKET
MATERIAL 304 STAINLESS STEEL ASTM A240	TOLERANCES X ± 1 .X ± 0.5 .XX ± 0.25 ANGLE ± 1°	ENGINEERED BY Y.ORLOV	DATE 03FEB10	
	THIRD ANGLE PROJECTION	DATABASE DESY EDMS	TEAM/GROUP T4CM DESIGN	SIZE A3 / CAGE CODE 0U5R6 / DWG NO. D00000000734801 / REV A
		CAD I-DEAS	SOLID MODEL NO. D00000000616592	SCALE 1:2 / DO NOT SCALE DWG / SHEET 1 OF 1

REVISION HISTORY CAD MAINTAINED. CHANGES SHALL BE INCORPORATED BY THE DESIGN ACTIVITY.				
ZONE	REV	DESCRIPTION	DATE	APPROVED
	A	INITIAL RELEASE ER ILC-000061		

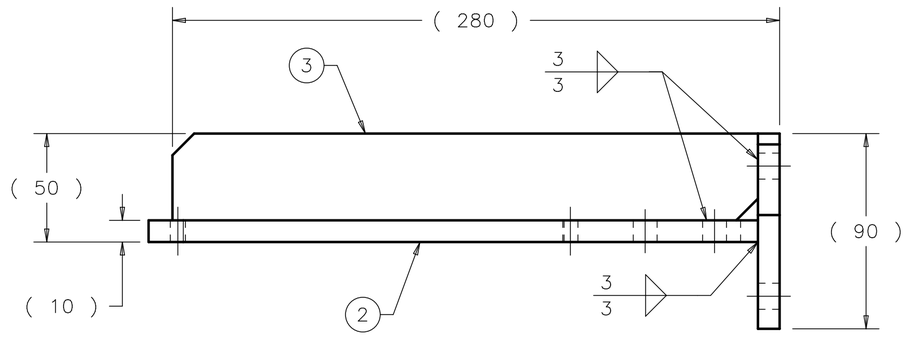

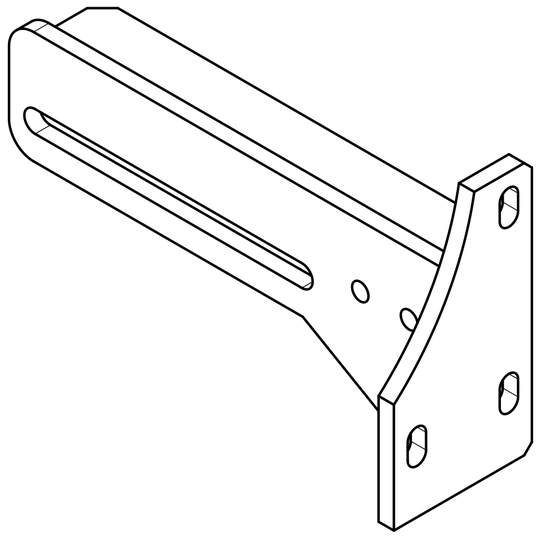

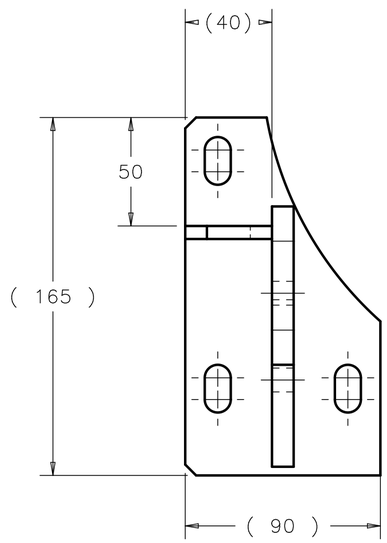

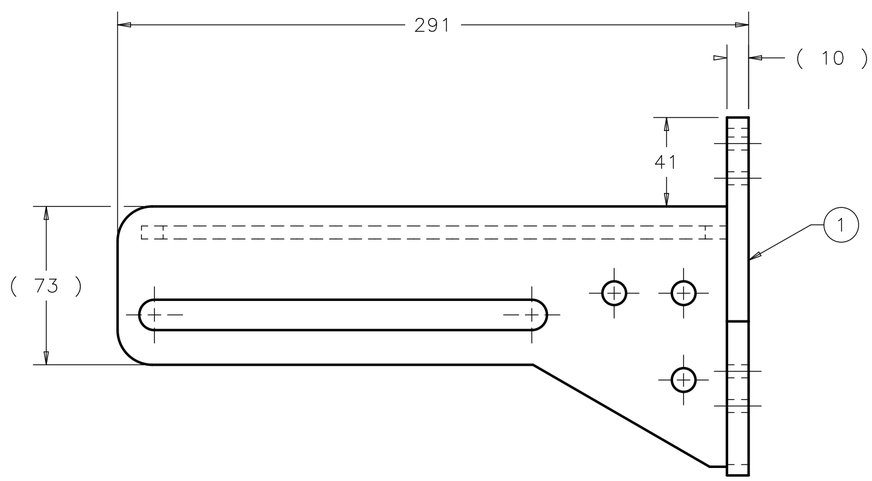

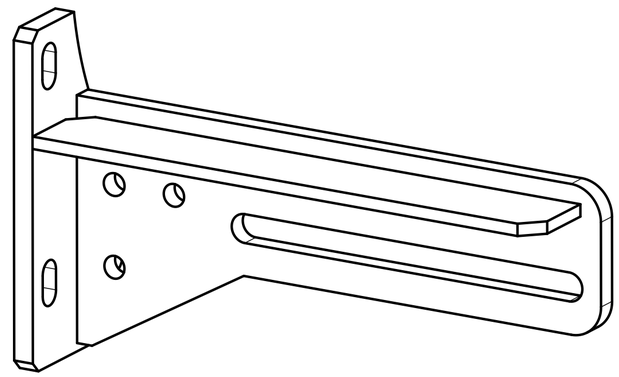

NOTES (UNLESS OTHERWISE SPECIFIED):

1. ALL WELDS TO BE SMOOTH FOR COSMETIC APPEARANCE.
2. STEEL WELDS SHALL BE IN ACCORDANCE WITH THE LATEST REVISION OF ANSI/AWSD1.1, STRUCTURAL WELDING CODE - STEEL.
   - 2-1. THE WELDS SHALL HAVE NO CRACKS, THOROUGH FUSION, AND PROPER PROFILES. THE UNDERRUN, UNDERCUT, AND POROSITY OF THE WELDS MUST CONFORM TO THE CODE. ALL OF THE ABOVE PROPERTIES SHALL BE VISUALLY INSPECTED PER THE ACCEPTANCE CRITERIA IN AWS D1.1, TABLE 6.1.(REVISION 98).
   - 2-2. WELD REPAIRS AND WELDMENT STRAIGHTENING MAY BE PREFORMED PER AWSD1.1: 5.26. ENGINEERING APPROVAL MAY BE REQUIRED PER 5.26.3. (SECTION NUMBERS TAKEN FROM REVISION 98).
3. INTERIOR WELDS TO BE AS SMOOTH AS POSSIBLE, FINISH GRIND SMOOTH MAY BE REQUIRED.
4. ASSEMBLY MUST BE FREE OF DIRT, GREASE, OIL AND CHIPS.

ITEM	P.I.N.	DESCRIPTION	QTY
3	734881	SUPPORT SLOTTED BRACKET	1
2	734801	SLOTTED BRACKET	1
1	734871	HOLDER BRACKET	1

PARTS LIST

CRYOSTAT ASSY	736181
NEXT ASSY	USED ON

APPLICATION

FINISH: N/A

MATERIAL: SEE PARTS LIST

UNLESS OTHERWISE SPECIFIED:
DIMENSIONS ARE IN MILLIMETERS
INTERPRET DIM PER ASME Y14.5M-1994
BREAK ALL SHARP EDGES .75 MAX.
ALL MACH. SURFACES 3.2 MAX.

TOLERANCES: X ± 1, .X ± --, .XX ± --, ANGLE ± --

THIRD ANGLE PROJECTION

DRAWN BY J.MONTELONGO	DATE 25AUG06		
CHECKED BY C.GRIMM	DATE 03FEB10		
ENGINEERED BY Y.ORLOV	DATE 03FEB10		
DATABASE DESY EDMS	TEAM/GROUP T4CM DESIGN		
CAD I-DEAS	SOLID MODEL NO. D00000000552843		

FERMI NATIONAL ACCELERATOR LABORATORY
UNITED STATES DEPARTMENT OF ENERGY
P.O. BOX 500, BATAVIA, IL 60510-0500

TITLE: ILC TYPE IV CRYOMODULE MAIN COUPLER LEFT_MNTG_BRACKET_WELDMENT

SIZE	CAGE CODE	DWG NO.	REV
A2	0U5R6	D00000000734851	A

SCALE 1:2 | DO NOT SCALE DWG | SHEET 1 OF 1

Created: 10:31:27 on 04-02-10 (D-M-Y) By: dmitchel State: 1-INITIAL

REVISION HISTORY CAD MAINTAINED. CHANGES SHALL BE INCORPORATED BY THE DESIGN ACTIVITY.				
ZONE	REV	DESCRIPTION	DATE	APPROVED
	A	INITIAL RELEASE ER ILC-000061		

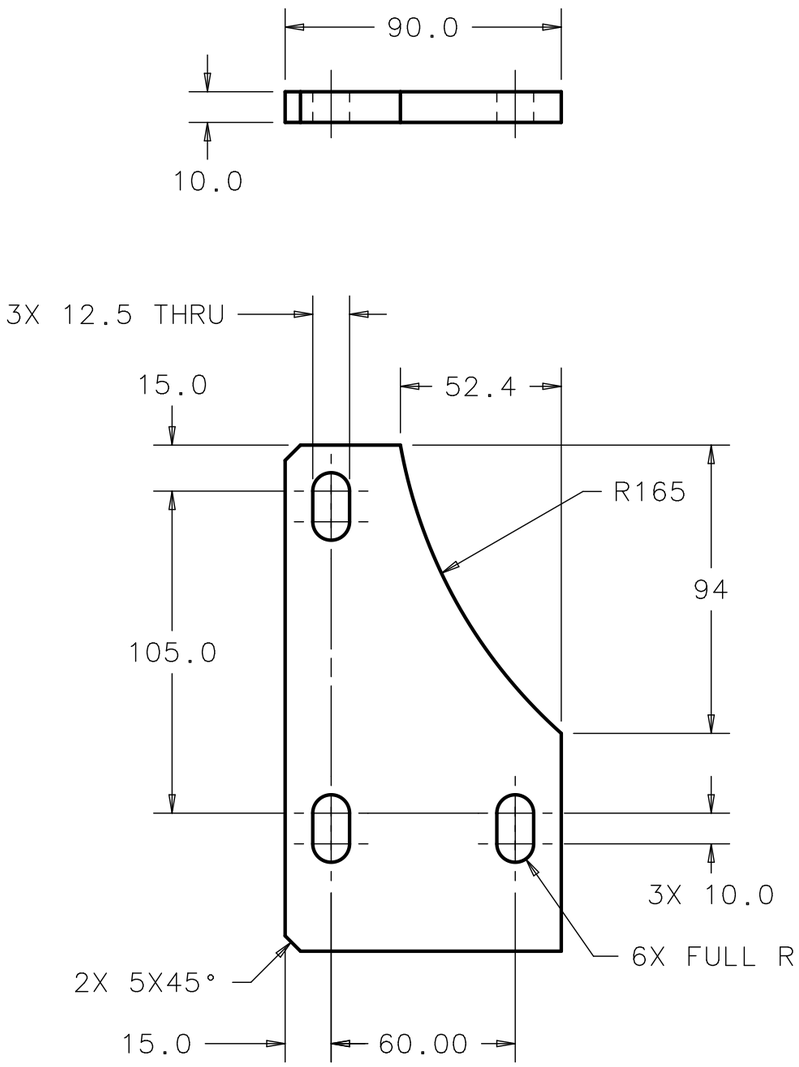

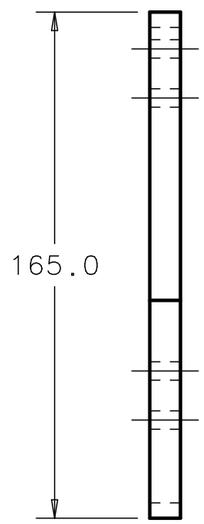

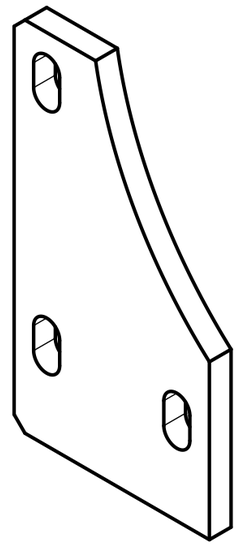

NOTES (UNLESS OTHERWISE SPECIFIED):

1. PART MUST BE FREE OF DIRT, GREASE, OIL AND CHIPS.
2. PART TO BE FREE OF ALL SHARP EDGES, CORNERS, AND BURRS.

737051	737101
736181	734851
NEXT ASSY	USED ON
APPLICATION	

FINISH N/A	UNLESS OTHERWISE SPECIFIED: DIMENSIONS ARE IN MILLIMETERS INTERPRET DIM PER ASME Y14.5M-1994 BREAK ALL SHARP EDGES 0.75 MAX. ALL MACH. SURFACES 3.2 MAX.		DRAWN BY J.MONTELONGO	DATE 25AUG06
			CHECKED BY C.GRIMM	DATE 03FEB10
			ENGINEERED BY Y.ORLOV	DATE 03FEB10
MATERIAL 304 STAINLESS STEEL ASTM A204	TOLERANCES X ± 1 .X ± 0.5 .XX ± 0.10 ANGLE ± 1°	THIRD ANGLE PROJECTION	DATABASE DESY EDMS	TEAM/GROUP T4CM DESIGN
			CAD I-DEAS	SOLID MODEL NO. D00000000616602

FERMI NATIONAL ACCELERATOR LABORATORY
UNITED STATES DEPARTMENT OF ENERGY
P.O. BOX 500, BATAVIA, IL 60510-0500

TITLE
ILC TYPE IV CRYOMODULE
MAIN COUPLER
HOLDER_BRACKET

SIZE	CAGE CODE	DWG NO.	REV
A3	0U5R6	D00000000734871	A
SCALE 1:2	DO NOT SCALE DWG	SHEET 1 OF 1	

Created: 16:32:06 on 04-02-10 (D-M-Y) By: dmitchel State: 1-INITIAL

REVISION HISTORY

CAD MAINTAINED. CHANGES SHALL BE INCORPORATED BY THE DESIGN ACTIVITY.

ZONE	REV	DESCRIPTION	DATE	APPROVED
	A	INITIAL RELEASE ER ILC-000061		

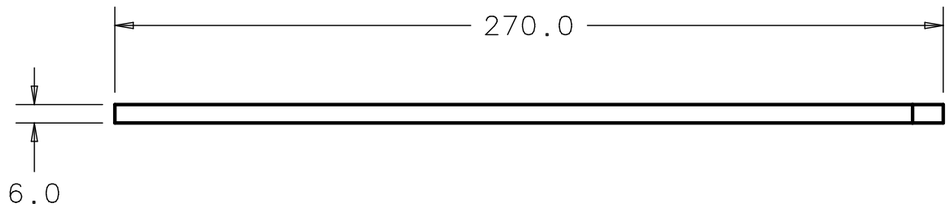

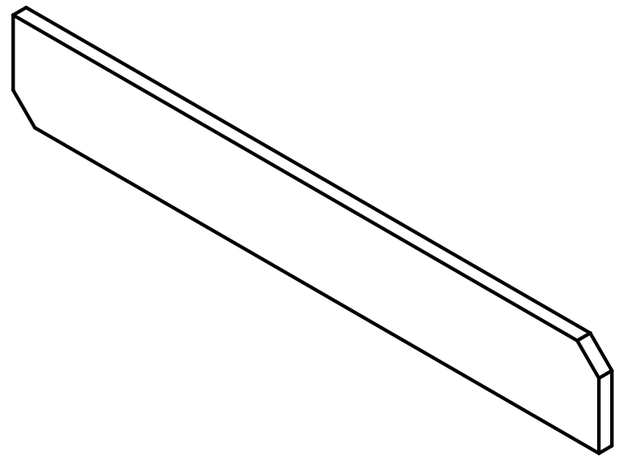

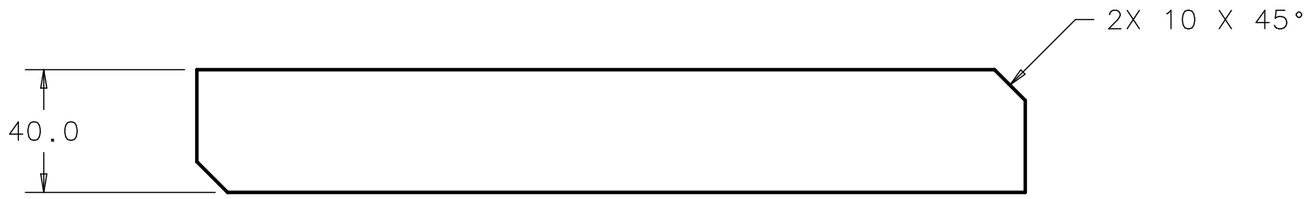

NOTES (UNLESS OTHERWISE SPECIFIED):

1. PART MUST BE FREE OF DIRT, GREASE, OIL AND CHIPS.
2. PART TO BE FREE OF ALL SHARP EDGES, CORNERS, AND BURRS.

737051	737101
736181	734851
NEXT ASSY	USED ON
APPLICATION	

FINISH: N/A

MATERIAL: 304 STAINLESS STEEL ASTM A240

UNLESS OTHERWISE SPECIFIED:
DIMENSIONS ARE IN MILLIMETERS
INTERPRET DIM PER ASME Y14.5M-1994
BREAK ALL SHARP EDGES 0.75 MAX.
ALL MACH. SURFACES 3.2 MAX.

TOLERANCES: X ± 1, .X ± 0.5, .XX ± --, ANGLE ± 1°

THIRD ANGLE PROJECTION

DRAWN BY J.MONTELONGO	DATE 25AUG06	
CHECKED BY C.GRIMM	DATE 03FEB10	
ENGINEERED BY Y.ORLOV	DATE 03FEB10	
DATABASE DESY EDMS	TEAM/GROUP T4CM DESIGN	
CAD I-DEAS	SOLID MODEL NO. D00000000616582	

FERMI NATIONAL ACCELERATOR LABORATORY
UNITED STATES DEPARTMENT OF ENERGY
P.O. BOX 500, BATAVIA, IL 60510-0500

TITLE: ILC TYPE IV CRYOMODULE MAIN COUPLER SUPPORT_SLOTTED_BRACKET

SIZE	CAGE CODE	DWG NO.	REV
A3	0U5R6	D00000000734881	A

SCALE 1:2 | DO NOT SCALE DWG | SHEET 1 OF 1

Created: 10:32:42 on 04-02-10 (D-M-Y) By: dmitchel State: 1-INITIAL

REVISION HISTORY CAD MAINTAINED. CHANGES SHALL BE INCORPORATED BY THE DESIGN ACTIVITY.				
ZONE	REV	DESCRIPTION	DATE	APPROVED
	A	NEW RELEASE ER ILC-000061		

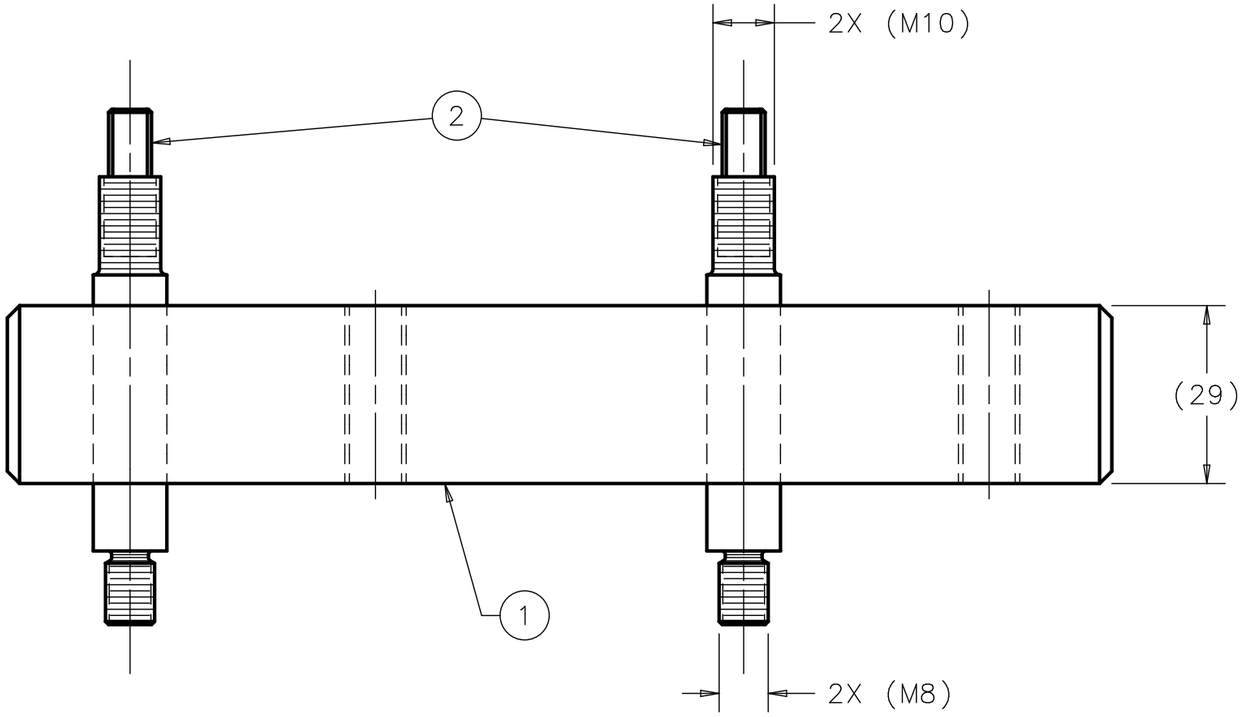

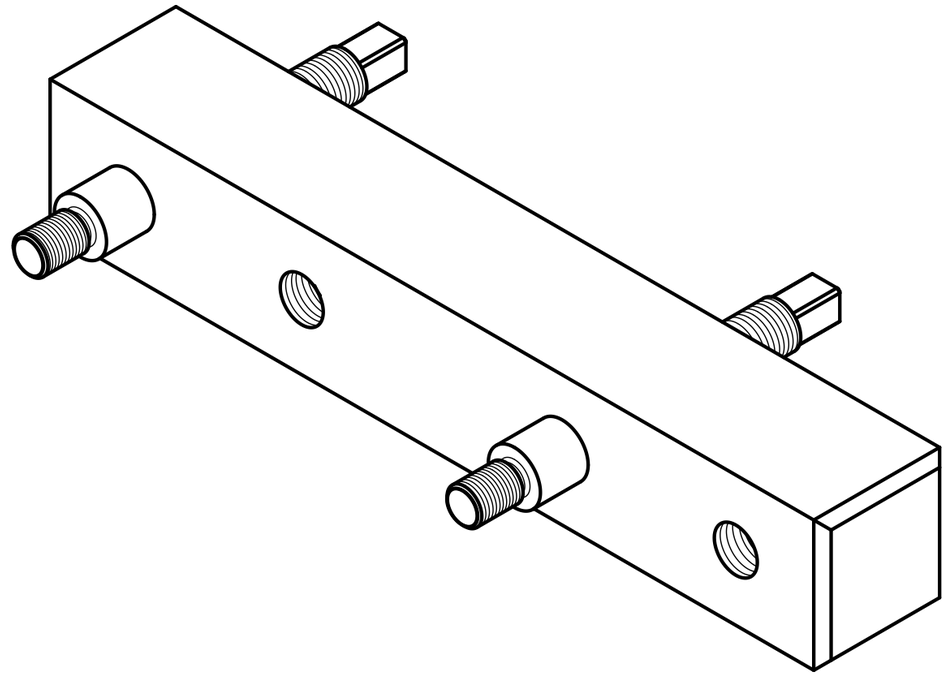

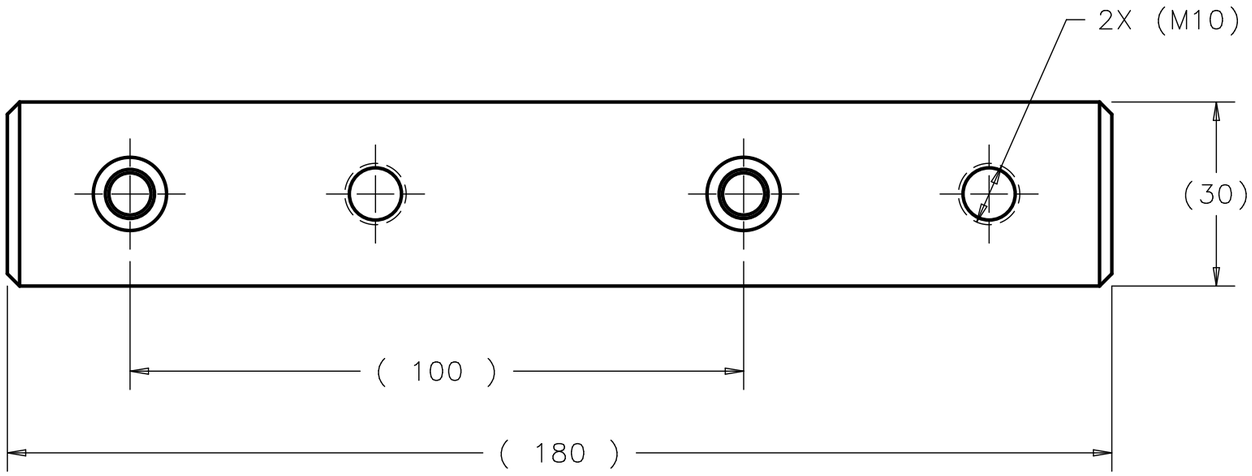

ITEM	P.I.N.	DESCRIPTION	QTY
2	736921	LOCKING BOLT	2
1	736911	RETAINING STRIP	1

PARTS LIST

NOTE (UNLESS OTHERWISE SPECIFIED):

1. ASSEMBLY MUST BE FREE OF DIRT, GREASE, OIL AND CHIPS.

APPLICATION	
CRYOSTAT ASSY	737051
CRYOSTAT ASSY	736181
NEXT ASSY	USED ON

FINISH: N/A

MATERIAL: SEE PARTS LIST

UNLESS OTHERWISE SPECIFIED:
DIMENSIONS ARE IN MILLIMETERS
INTERPRET DIM PER ASME Y14.5M-1994
BREAK ALL SHARP EDGES MAX.
ALL MACH. SURFACES MAX.

TOLERANCES: X ± 1, .X ± --, .XX ± --, ANGLE ± --

THIRD ANGLE PROJECTION

DRAWN BY J. MONTELONGO	DATE 24JUL06	
CHECKED BY C.GRIMM	DATE 03FEB10	
ENGINEERED BY Y.ORLOV	DATE 03FEB10	
DATABASE DESY EDMS	TEAM/GROUP T4CM DESIGN	
CAD I-DEAS	SOLID MODEL NO. D00000000553843	

FERMI NATIONAL ACCELERATOR LABORATORY
UNITED STATES DEPARTMENT OF ENERGY
P.O. BOX 500, BATAVIA, IL 60510-0500

TITLE: ILC TYPE IV CRYOMODULE MAIN COUPLER RETAINING_STRIP_ASSY

SIZE	CAGE CODE	DWG NO.	REV
A3	0U5R6	D00000000736091	A

SCALE 1:1 | DO NOT SCALE DWG | SHEET OF 1

REVISION HISTORY CAD MAINTAINED. CHANGES SHALL BE INCORPORATED BY THE DESIGN ACTIVITY.				
ZONE	REV	DESCRIPTION	DATE	APPROVED
	A	INITIAL RELEASE ER ILC-000061		
B2	B	ECO# 000097 ITEM 3 MATERIAL WAS SILICON BRONZE	22MAR10	Y. ORLOV

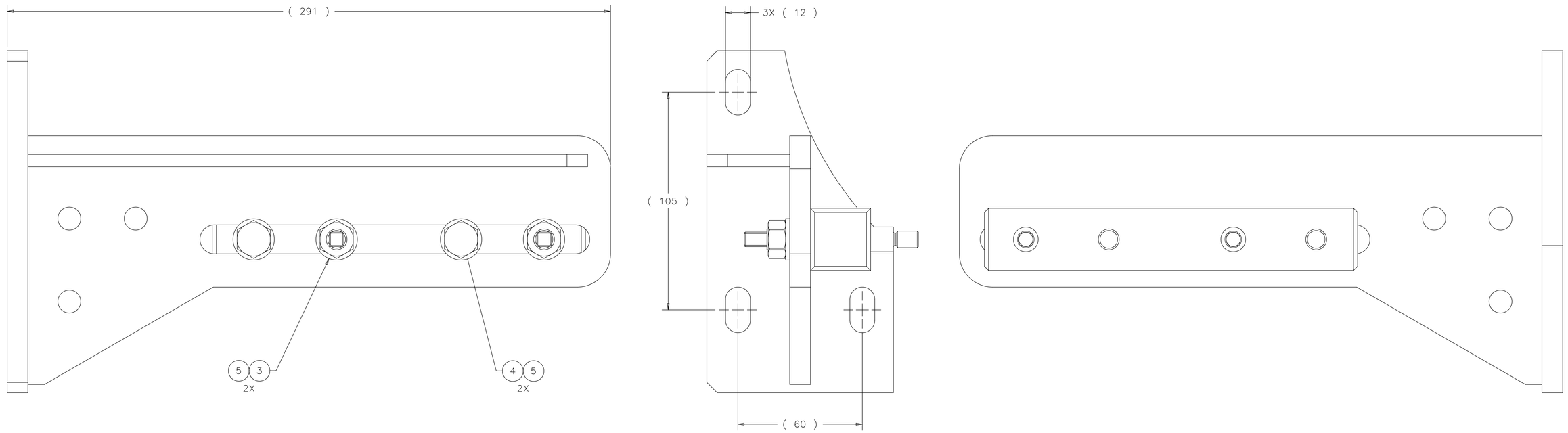

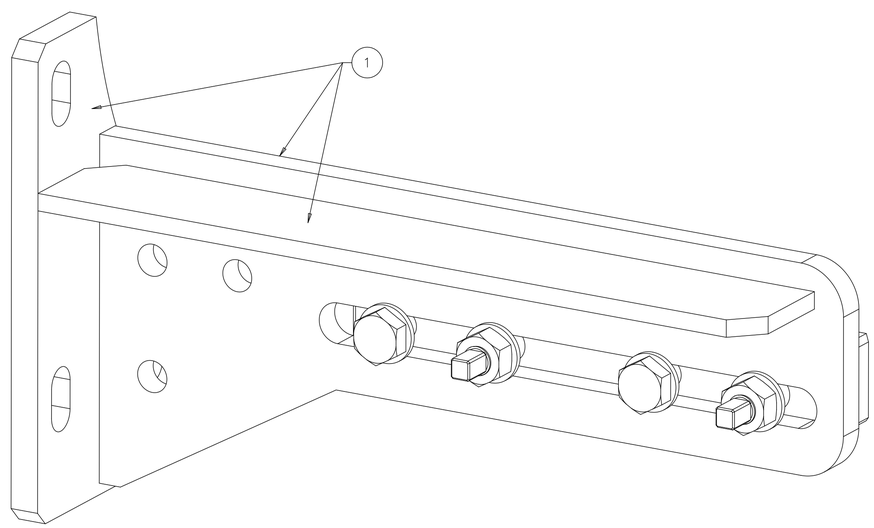

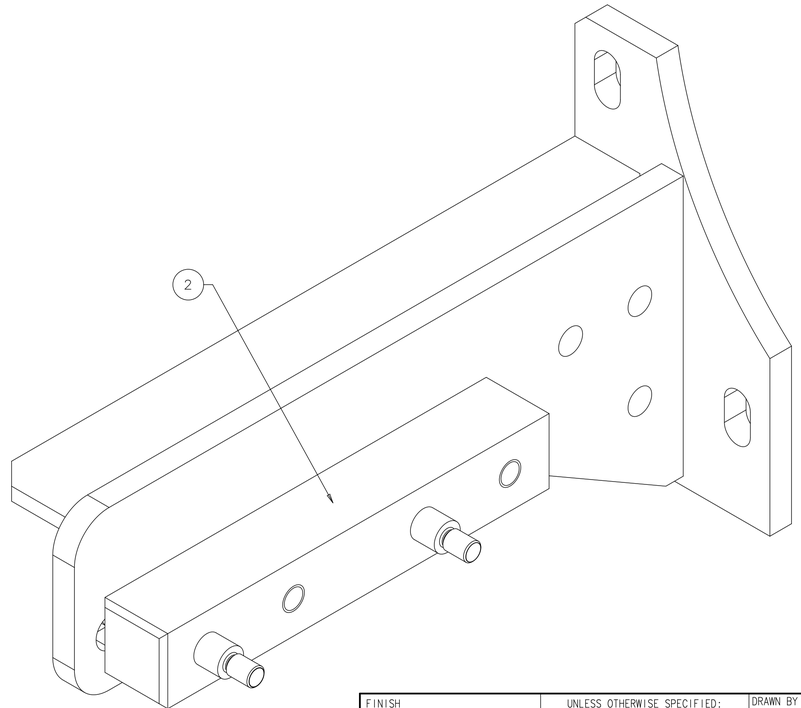

NOTES (UNLESS OTHERWISE SPECIFIED):

1. PART MUST BE FREE OF DIRT, GREASE, OIL AND CHIPS.
2. PART TO BE FREE OF ALL SHARP EDGES, CORNERS, AND BURRS.
3. VENDOR SHALL SUPPLY THE PART SUFFICIENTLY PACKAGED TO PROTECT THE FINISH AND INTEGRITY DURING SHIPMENT AND STORAGE. THE PACKAGE SHALL BE PROMINENTLY MARKED WITH THE PART NUMBER AND REVISION LEVEL.

ITEM	P.I.N.	DESCRIPTION	QTY
5	COML	WASHER, M10 316L STAINLESS STEEL	4
4	COML	BOLT, HEX HEAD, M10 X 35 LG. 316L STAINLESS STEEL	2
3	COML	NUT, HEX, M10 X 1.5 S.S. 316 OR S.S. 18-8	2
2	736091	RETAINING STRIP ASSY	1
1	734851	LEFT MOUNTING BRACKET WELDMENT	1

PARTS LIST

T4CM	CRYOSTAT ASSY
NEXT ASSY	USED ON
APPLICATION	

FINISH: N/A

MATERIAL: SEE PARTS LIST

UNLESS OTHERWISE SPECIFIED:
DIMENSIONS ARE IN MILLIMETERS
INTERPRET DIM PER ASME Y14.5M-1994
BREAK ALL SHARP EDGES .75 MAX.
ALL MACH. SURFACES 3.2 MAX.

TOLERANCES: X ± --, .X ± --, .XX ± --, ANGLE ± --

THIRD ANGLE PROJECTION

DRAWN BY J. MONTELONGO	DATE 29AUG06	
CHECKED BY C.GRIMM	DATE 03FEB10	
ENGINEERED BY Y.ORLOV	DATE 03FEB10	
DATABASE DESY EDMS	TEAM/GROUP T4CM DESIGN	
CAD I-DEAS	SOLID MODEL NO. D00000000557463	

FERMI NATIONAL ACCELERATOR LABORATORY
UNITED STATES DEPARTMENT OF ENERGY
P.O. BOX 500, BATAVIA, IL 60510-0500

TITLE
ILC TYPE IV CRYOMODULE MAIN COUPLER LEFT_MOUNTING_BRACKET_ASSY

SIZE	CAGE CODE	DWG NO.	REV
A1	0U5R6	D00000000736181	B

SCALE 1:2 | DO NOT SCALE DRAWING | SHEET 1 OF 1

Created: 16:01:36 on 22-03-10 (D-M-Y) By: victormm State: 1-INITIAL

REVISION HISTORY CAD MAINTAINED. CHANGES SHALL BE INCORPORATED BY THE DESIGN ACTIVITY.				
ZONE	REV	DESCRIPTION	DATE	APPROVED
	A	INITIAL RELEASE ER ILC-000061		

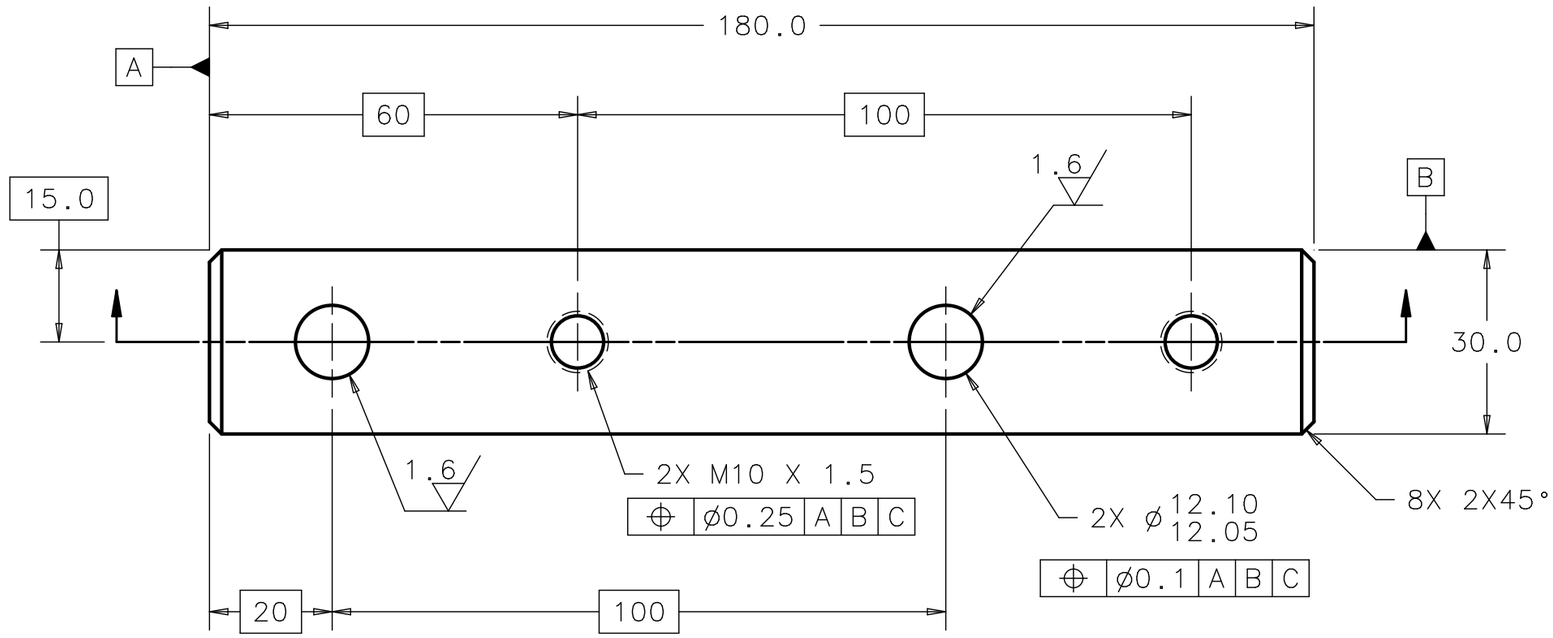

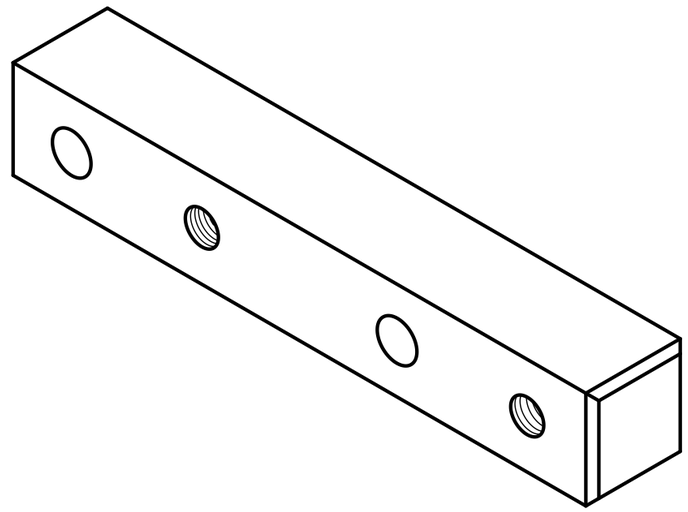

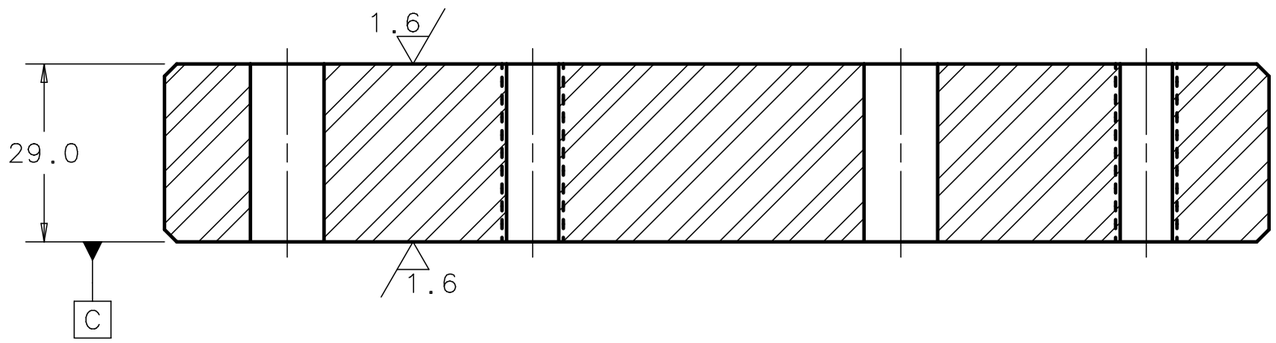

NOTES (UNLESS OTHERWISE SPECIFIED):

1. PART MUST BE FREE OF DIRT, GREASE, OIL AND CHIPS.
2. PART TO BE FREE OF ALL SHARP EDGES, CORNERS, AND BURRS.

737051	736091
736181	736091
NEXT ASSY	USED ON
APPLICATION	

FINISH N/A	UNLESS OTHERWISE SPECIFIED: DIMENSIONS ARE IN MILLIMETERS INTERPRET DIM PER ASME Y14.5M-1994 BREAK ALL SHARP EDGES 0.75 MAX. ALL MACH. SURFACES 3.2 MAX.		DRAWN BY J. MONTELONGO	DATE 31AUG06
			CHECKED BY C.GRIMM	DATE 03FEB10
			ENGINEERED BY Y.ORLOV	DATE 03FEB10
MATERIAL 304 STAINLESS STEEL ASTM A240	TOLERANCES X ± 1 .X ± 0.5 .XX ± 0.10 ANGLE ± 1°	THIRD ANGLE PROJECTION	DATABASE DESY EDMS	TEAM/GROUP T4CM DESIGN
			CAD I-DEAS	SOLID MODEL NO. D00000000617422

FERMI NATIONAL ACCELERATOR LABORATORY
UNITED STATES DEPARTMENT OF ENERGY
P.O. BOX 500, BATAVIA, IL 60510-0500

TITLE
ILC TYPE IV CRYOMODULE
MAIN COUPLER
RETAINING_STRIP

SIZE	CAGE CODE	DWG NO.	REV
A3	0U5R6	D00000000736911	A
SCALE 1:1	DO NOT SCALE DWG	SHEET 1 OF 1	

REVISION HISTORY CAD MAINTAINED. CHANGES SHALL BE INCORPORATED BY THE DESIGN ACTIVITY.				
ZONE	REV	DESCRIPTION	DATE	APPROVED
	A	INITIAL RELEASE ER ILC-000061		

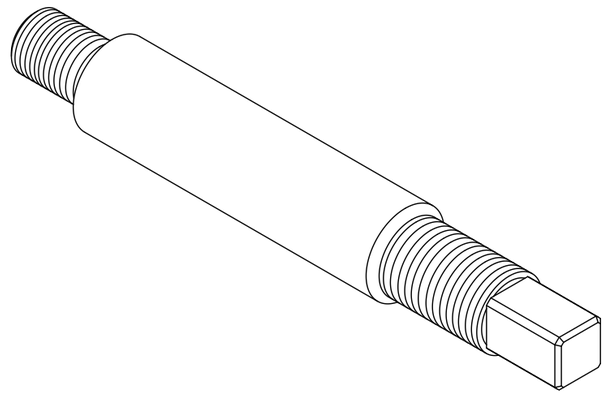

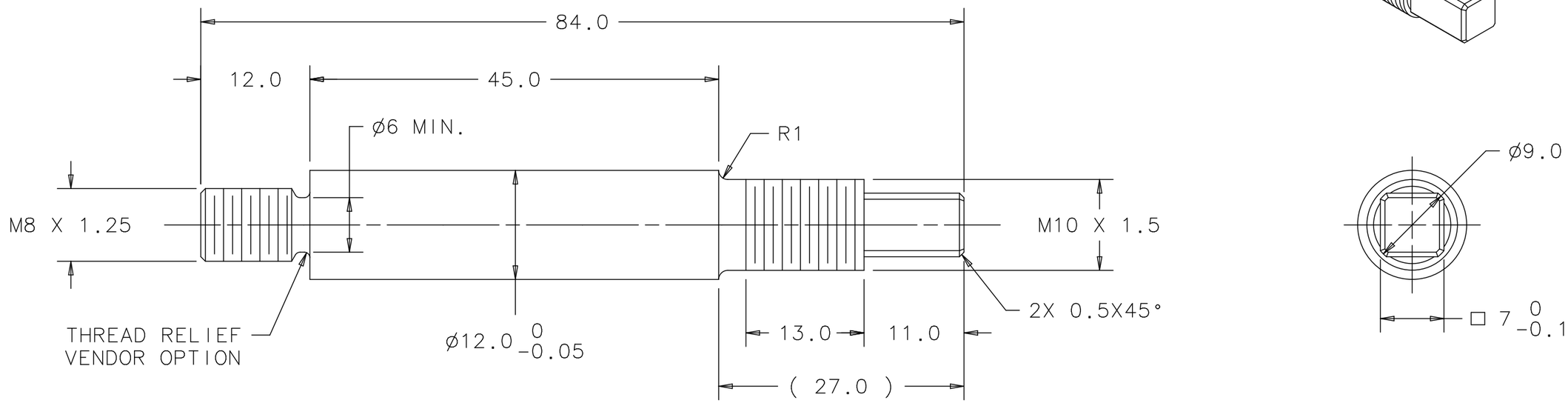

NOTES (UNLESS OTHERWISE SPECIFIED):

1. PART MUST BE FREE OF DIRT, GREASE, OIL AND CHIPS.
2. PART TO BE FREE OF ALL SHARP EDGES, CORNERS, AND BURRS.

737051	736091
736181	736091
NEXT ASSY	USED ON
APPLICATION	

FINISH N/A	UNLESS OTHERWISE SPECIFIED: DIMENSIONS ARE IN MILLIMETERS INTERPRET DIM PER ASME Y14.5M-1994 BREAK ALL SHARP EDGES 0.75 MAX. ALL MACH. SURFACES 1.6 / MAX.	DRAWN BY J. MONTELONGO	DATE 31AUG06
		CHECKED BY C.GRIMM	DATE 03FEB10
		ENGINEERED BY Y.ORLOV	DATE 03FEB10
MATERIAL 304 STAINLESS STEEL ASTM A240	TOLERANCES X ± 1 .X ± 0.5 .XX ± -- ANGLE ± 1°	THIRD ANGLE PROJECTION	
		DATABASE DESY EDMS	TEAM/GROUP T4CM DESIGN
		CAD I-DEAS	SOLID MODEL NO. D00000000617382

FERMI NATIONAL ACCELERATOR LABORATORY
UNITED STATES DEPARTMENT OF ENERGY
P.O. BOX 500, BATAVIA, IL 60510-0500

TITLE
ILC TYPE IV CRYOMODULE MAIN COUPLER LOCKING_BOLT

SIZE	CAGE CODE	DWG NO.	REV
A3	0U5R6	D00000000736921	A
SCALE 2:1	DO NOT SCALE DWG	SHEET 1 OF 1	

REVISION HISTORY CAD MAINTAINED. CHANGES SHALL BE INCORPORATED BY THE DESIGN ACTIVITY.				
ZONE	REV	DESCRIPTION	DATE	APPROVED
	A	NEW RELEASE ER ILC-000061		
B2	B	ECO# 000097 ITEM 6 MATERIAL WAS SILICON BRONZE	22MAR10	Y. ORLOV

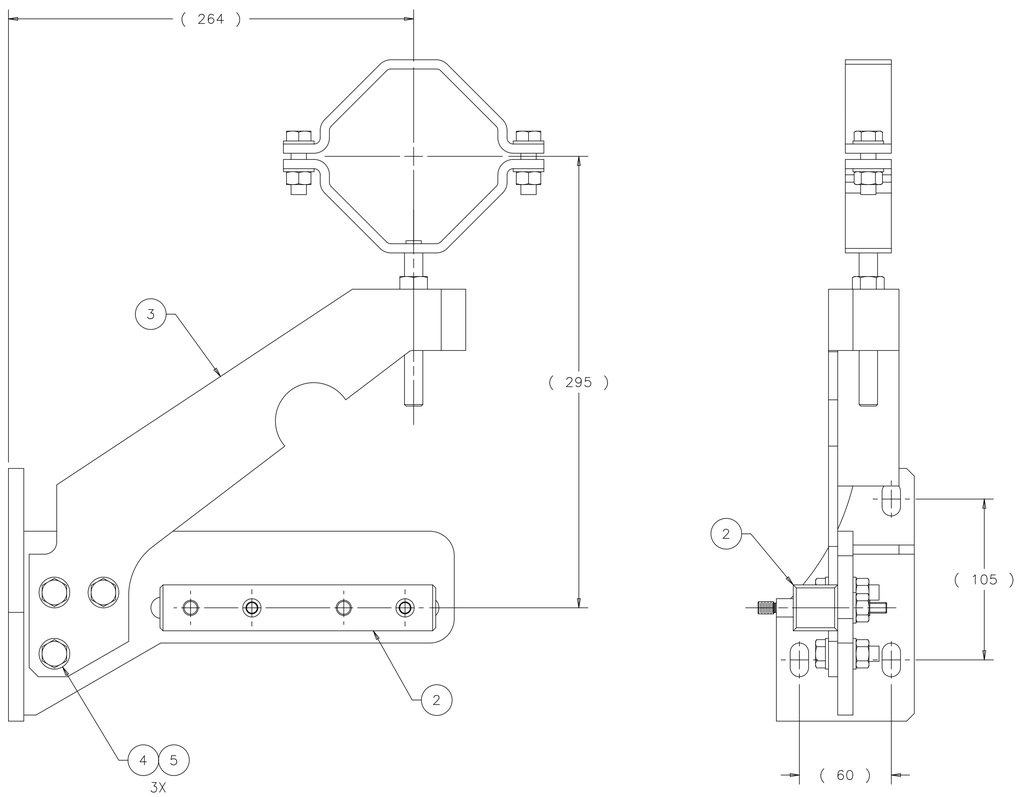

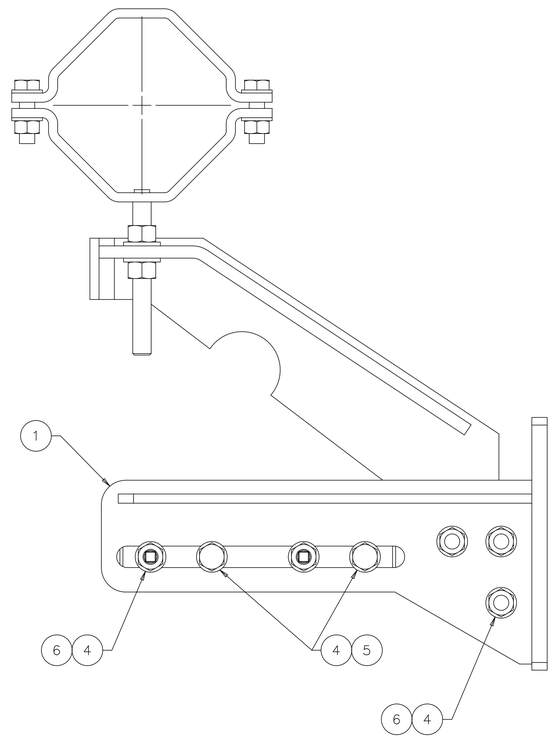

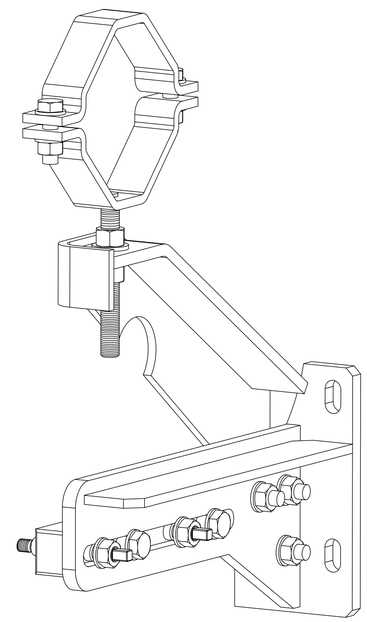

ITEM	P.I.N.	DESCRIPTION	QTY
6	COML	NUT, HEX, M10 X 1.5 S.S. 316 OR S.S. 18-8	5
5	COML	BOLT, HEX HEAD, M10 X 35 LG. 316L STAINLESS STEEL	5
4	COML	WASHER, M10 316L STAINLESS STEEL	10
3	903915	MC SUPPORT BRACKET ASSEMBLY	1
2	736091	RETAINING STRIP ASSY	1
1	737101	RIGHT MNTG BRACKET WELDMENT	1

PARTS LIST

NOTES (UNLESS OTHERWISE SPECIFIED):

1. PART MUST BE FREE OF DIRT, GREASE, OIL AND CHIPS.
2. PART TO BE FREE OF ALL SHARP EDGES, CORNERS, AND BURRS.
3. VENDOR SHALL SUPPLY THE PART SUFFICIENTLY PACKAGED TO PROTECT THE FINISH AND INTEGRITY DURING SHIPMENT AND STORAGE. THE PACKAGE SHALL BE PROMINENTLY MARKED WITH THE PART NUMBER AND REVISION LEVEL.

T4CM	CRYOSTAT ASSY
NEXT ASSY	USED ON
APPLICATION	

FINISH: N/A

MATERIAL: SEE PARTS LIST

UNLESS OTHERWISE SPECIFIED:
DIMENSIONS ARE IN MILLIMETERS
INTERPRET DIM PER ASME Y14.5M-1994
BREAK ALL SHARP EDGES MAX.
ALL MACH. SURFACES MAX.

TOLERANCES: X ± --, .X ± --, .XX ± --, ANGLE ± --

THIRD ANGLE PROJECTION

		DATE
DRAWN BY	J. MONTELONGO	01SEP06
CHECKED BY	C.GRIMM	03FEB10
ENGINEERED BY	Y.ORLOV	03FEB10
DATABASE	DESY EDMS	TEAM/GROUP: T4CM DESIGN
CAD	I-DEAS	SOLID MODEL NO. D00000000555183

FERMI NATIONAL ACCELERATOR LABORATORY
UNITED STATES DEPARTMENT OF ENERGY
P.O. BOX 500, BATAVIA, IL 60510-0500

TITLE
ILC TYPE IV CRYOMODULE MAIN COUPLER RIGHT_MOUNTING_BRACKET_ASSY

SIZE	CAGE CODE	DWG NO.	REV
A1	0U5R6	D00000000737051	B

SCALE 1:1 | DO NOT SCALE DRAWING | SHEET OF 1

REVISION HISTORY CAD MAINTAINED. CHANGES SHALL BE INCORPORATED BY THE DESIGN ACTIVITY.				
ZONE	REV	DESCRIPTION	DATE	APPROVED
	A	NEW RELEASE ER ILC-000061		

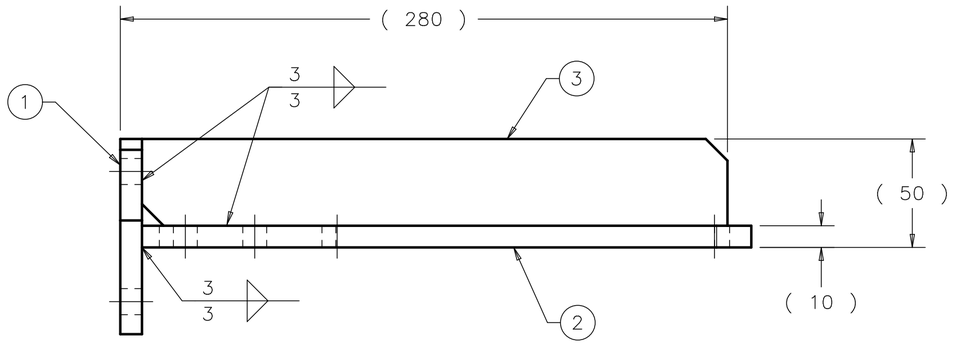

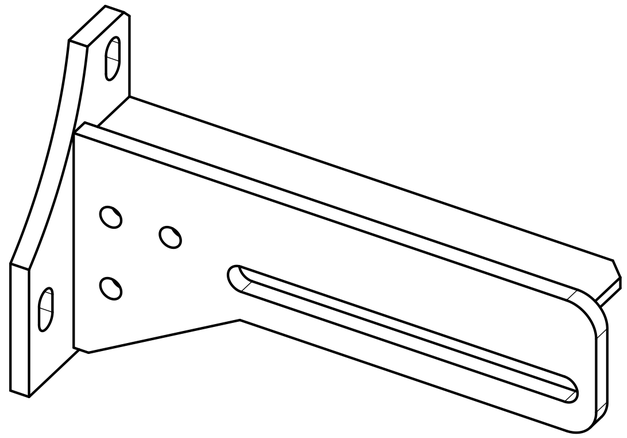

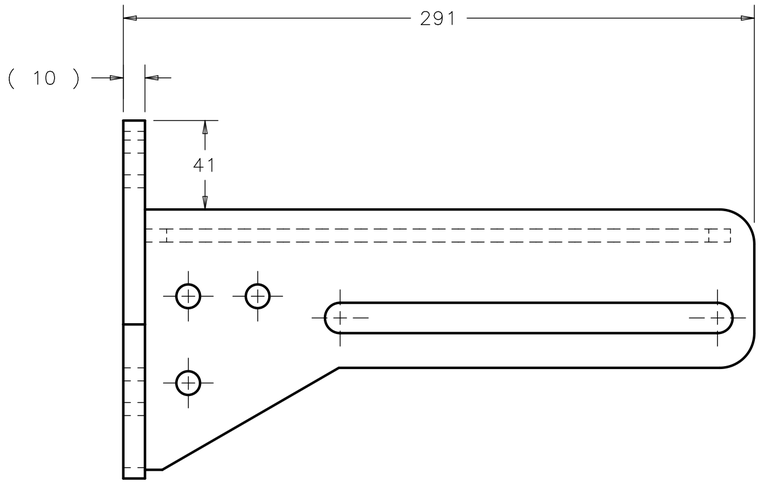

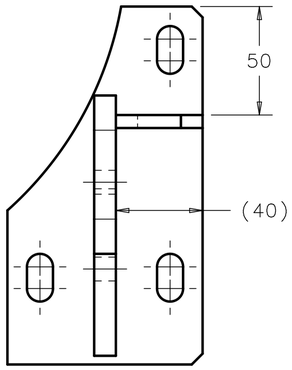

NOTES (UNLESS OTHERWISE SPECIFIED):

1. ALL WELDS TO BE SMOOTH FOR COSMETIC APPEARANCE.
2. STEEL WELDS SHALL BE IN ACCORDANCE WITH THE LATEST REVISION OF ANSI/AWSD1.1, STRUCTURAL WELDING CODE - STEEL.
   - 2-1. THE WELDS SHALL HAVE NO CRACKS, THOROUGH FUSION, AND PROPER PROFILES. THE UNDERRUN, UNDERCUT, AND POROSITY OF THE WELDS MUST CONFORM TO THE CODE. ALL OF THE ABOVE PROPERTIES SHALL BE VISUALLY INSPECTED PER THE ACCEPTANCE CRITERIA IN AWS D1.1, TABLE 6.1.(REVISION 98).
   - 2-2. WELD REPAIRS AND WELDMENT STRAIGHTENING MAY BE PREFORMED PER AWSD1.1: 5.26. ENGINEERING APPROVAL MAY BE REQUIRED PER 5.26.3. (SECTION NUMBERS TAKEN FROM REVISION 98).
3. INTERIOR WELDS TO BE AS SMOOTH AS POSSIBLE. FINISH GRIND SMOOTH MAY BE REQUIRED.
4. ASSEMBLY MUST BE FREE OF DIRT, GREASE, OIL AND CHIPS.

ITEM	P.I.N.	DESCRIPTION	QTY
3	734881	SUPPORT SLOTTED BRACKET	1
2	734801	SLOTTED BRACKET	1
1	734871	HOLDER BRACKET	1

PARTS LIST

CRYOSTAT ASSY	737051
NEXT ASSY	USED ON
APPLICATION	

FINISH: N/A

MATERIAL: SEE PARTS LIST

UNLESS OTHERWISE SPECIFIED:
DIMENSIONS ARE IN MILLIMETERS
INTERPRET DIM PER ASME Y14.5M-1994
BREAK ALL SHARP EDGES 0.75 MAX.
ALL MACH. SURFACES ▽ MAX.

TOLERANCES: X ± 1, .X ± --, .XX ± --, ANGLE ± 0.5°

THIRD ANGLE PROJECTION

DRAWN BY: J. MONTELONGO	DATE: 21JUL06	
CHECKED BY: C.GRIMM	DATE: 03FEB10	
ENGINEERED BY: Y.ORLOV	DATE: 03FEB10	
DATABASE: DESY EDMS	TEAM/GROUP: T4CM DESIGN	
CAD: I-DEAS	SOLID MODEL NO.: D00000000555033	

FERMI NATIONAL ACCELERATOR LABORATORY
UNITED STATES DEPARTMENT OF ENERGY
P.O. BOX 500, BATAVIA, IL 60510-0500

TITLE: ILC TYPE IV CRYOMODULE MAIN COUPLER RIGHT_MNTG_BRACKET_WELDMENT

SIZE	CAGE CODE	DWG NO.	REV
A2	0U5R6	D00000000737101	A

SCALE 1:2 | DO NOT SCALE DWG | SHEET OF 1

REVISION HISTORY

CAD MAINTAINED. CHANGES SHALL BE INCORPORATED BY THE DESIGN ACTIVITY.

ZONE	REV	DESCRIPTION	DATE	APPROVED
	A	INITIAL RELEASE ER ILC-000061		

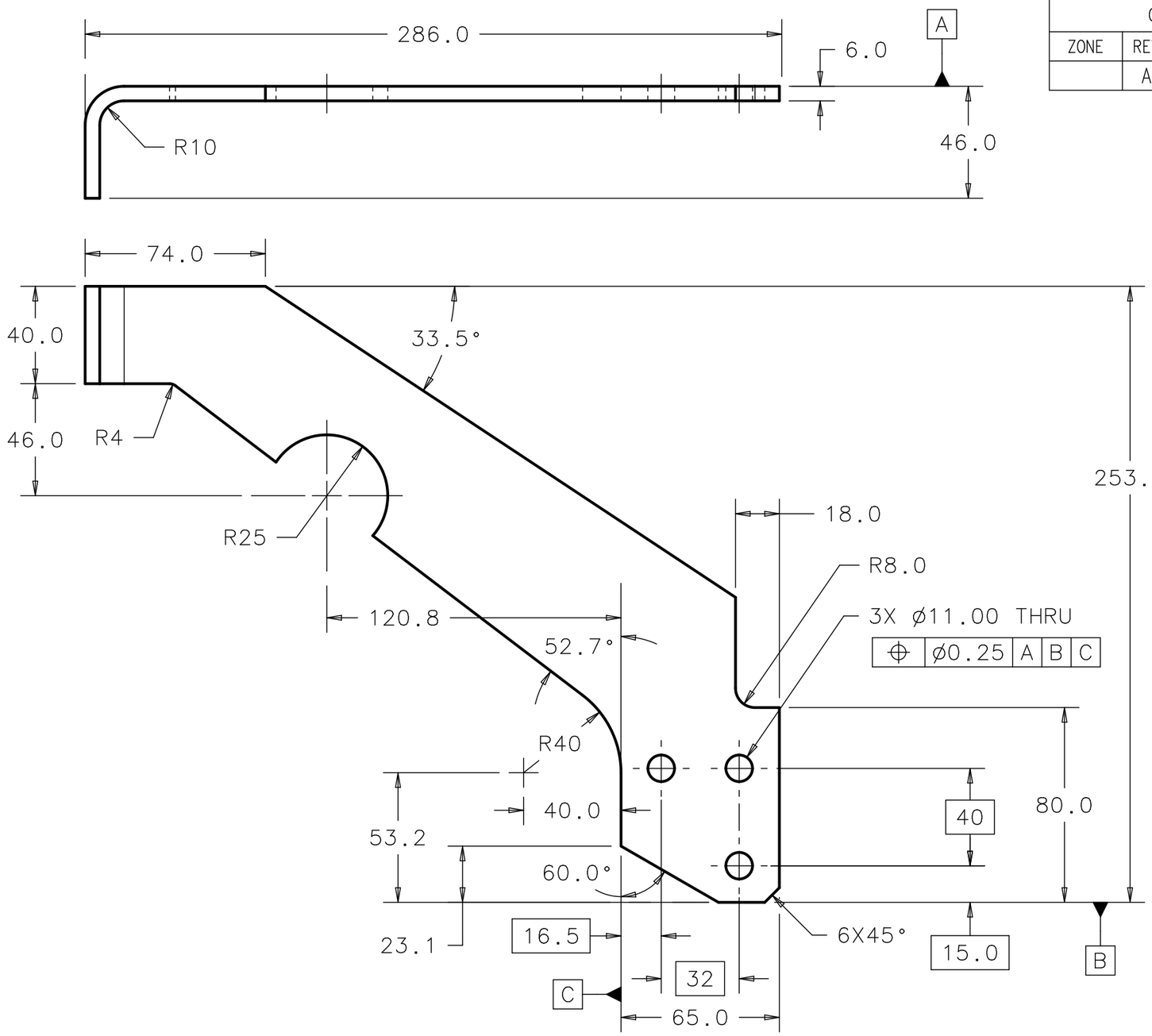

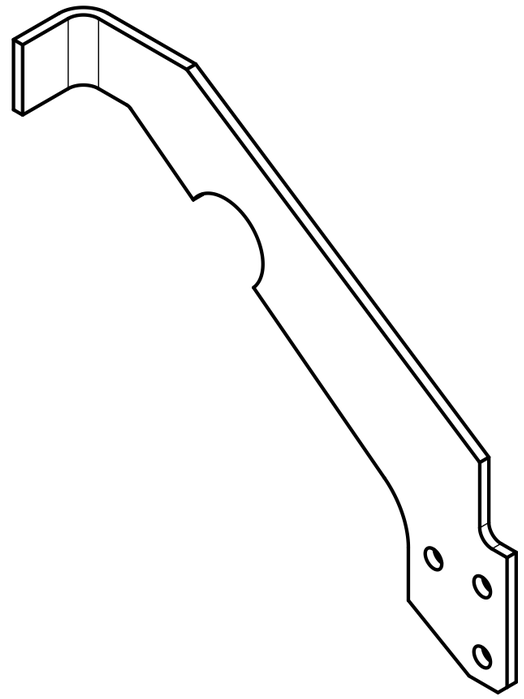

NOTES (UNLESS OTHERWISE SPECIFIED):

1. PART MUST BE FREE OF DIRT, GREASE, OIL AND CHIPS.
2. PART TO BE FREE OF ALL SHARP EDGES, CORNERS, AND BURRS.

903915	737161
NEXT ASSY	USED ON
APPLICATION	

FINISH: N/A

MATERIAL: 304 STAINLESS STEEL ASTM A240

UNLESS OTHERWISE SPECIFIED:
DIMENSIONS ARE IN MILLIMETERS
INTERPRET DIM PER ASME Y14.5M-1994
BREAK ALL SHARP EDGES 0.75 MAX.
ALL MACH. SURFACES 3.2 MAX.

TOLERANCES: X ± 1, .X ± 0.5, .XX ± 0.1, ANGLE ± 1°

THIRD ANGLE PROJECTION

DRAWN BY J. MONTELONGO	DATE 1SEP06		
CHECKED BY C.GRIMM	DATE 03FEB10		
ENGINEERED BY Y.ORLOV	DATE 03FEB10		
DATABASE DESY EDMS	TEAM/GROUP T4CM DESIGN		
CAD I-DEAS	SOLID MODEL NO. D00000000616652		

FERMI NATIONAL ACCELERATOR LABORATORY
UNITED STATES DEPARTMENT OF ENERGY
P.O. BOX 500, BATAVIA, IL 60510-0500

TITLE: ILC TYPE IV CRYOMODULE MAIN COUPLER HOLDER_MOUNTING_PLATE

SIZE	CAGE CODE	DWG NO.	REV
A3	0U5R6	D00000000737121	A

SCALE 1:2 | DO NOT SCALE DWG | SHEET 1 OF 1

Created: 16:36:40 on 04-02-10 (D-M-Y) By: dmitchel State: 1-INITIAL

REVISION HISTORY CAD MAINTAINED. CHANGES SHALL BE INCORPORATED BY THE DESIGN ACTIVITY.				
ZONE	REV	DESCRIPTION	DATE	APPROVED
	A	INITIAL RELEASE ER ILC-000061		

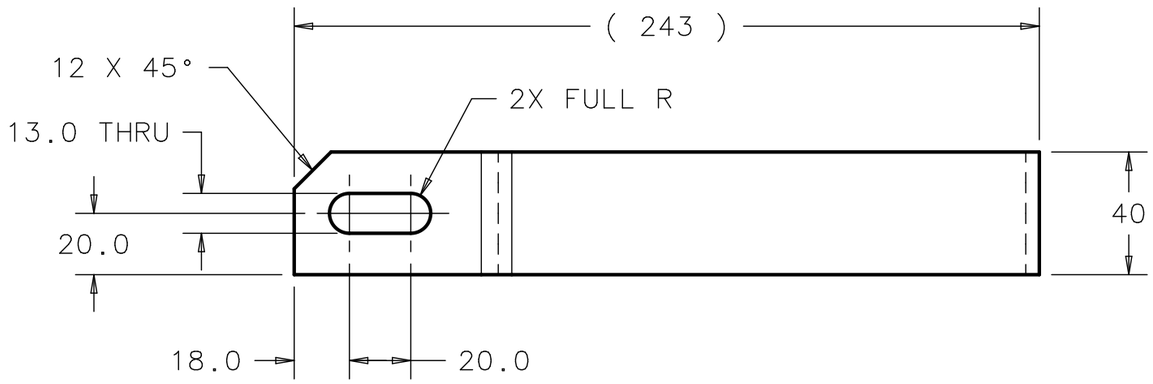

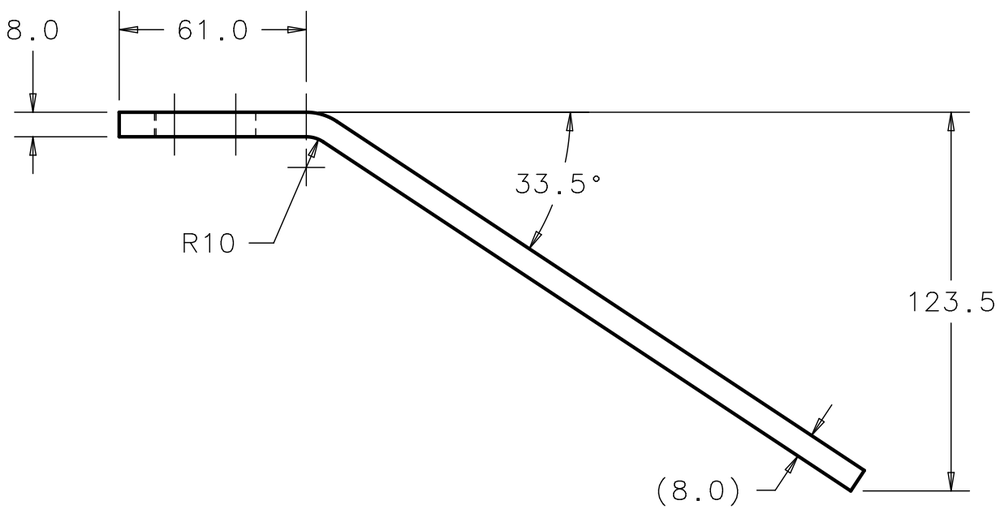

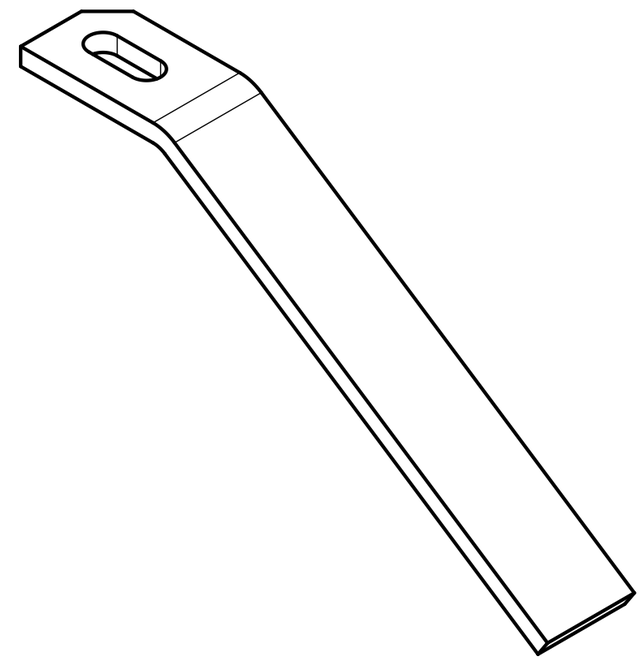

NOTES (UNLESS OTHERWISE SPECIFIED):

1. PART MUST BE FREE OF DIRT, GREASE, OIL AND CHIPS.
2. PART TO BE FREE OF ALL SHARP EDGES, CORNERS, AND BURRS.

903915	737161
NEXT ASSY	USED ON
APPLICATION	

FINISH N/A	UNLESS OTHERWISE SPECIFIED: DIMENSIONS ARE IN MILLIMETERS INTERPRET DIM PER ASME Y14.5M-1994 BREAK ALL SHARP EDGES 0.75 MAX. ALL MACH. SURFACES 3.2 MAX.	DRAWN BY J. MONTELONGO	DATE 01SEP06	FERMI NATIONAL ACCELERATOR LABORATORY UNITED STATES DEPARTMENT OF ENERGY P.O. BOX 500, BATAVIA, IL 60510-0500
		CHECKED BY C.GRIMM	DATE 03FEB10	TITLE ILC TYPE IV CRYOMODULE MAIN COUPLER SLOTTED_MNTG_PLATE_PIPE_CLAMP
MATERIAL 304 STAINLESS STEEL ASTM A240	TOLERANCES X ± 1 .X ± 0.5 .XX ± -- ANGLE ± 1°	ENGINEERED BY Y.ORLOV	DATE 03FEB10	
	THIRD ANGLE PROJECTION	DATABASE DESY EDMS	TEAM/GROUP T4CM DESIGN	SIZE A3 / CAGE CODE 0U5R6 / DWG NO. D00000000737151 / REV A
		CAD I-DEAS	SOLID MODEL NO. D00000000616642	SCALE 1:2 / DO NOT SCALE DWG / SHEET 1 OF 1

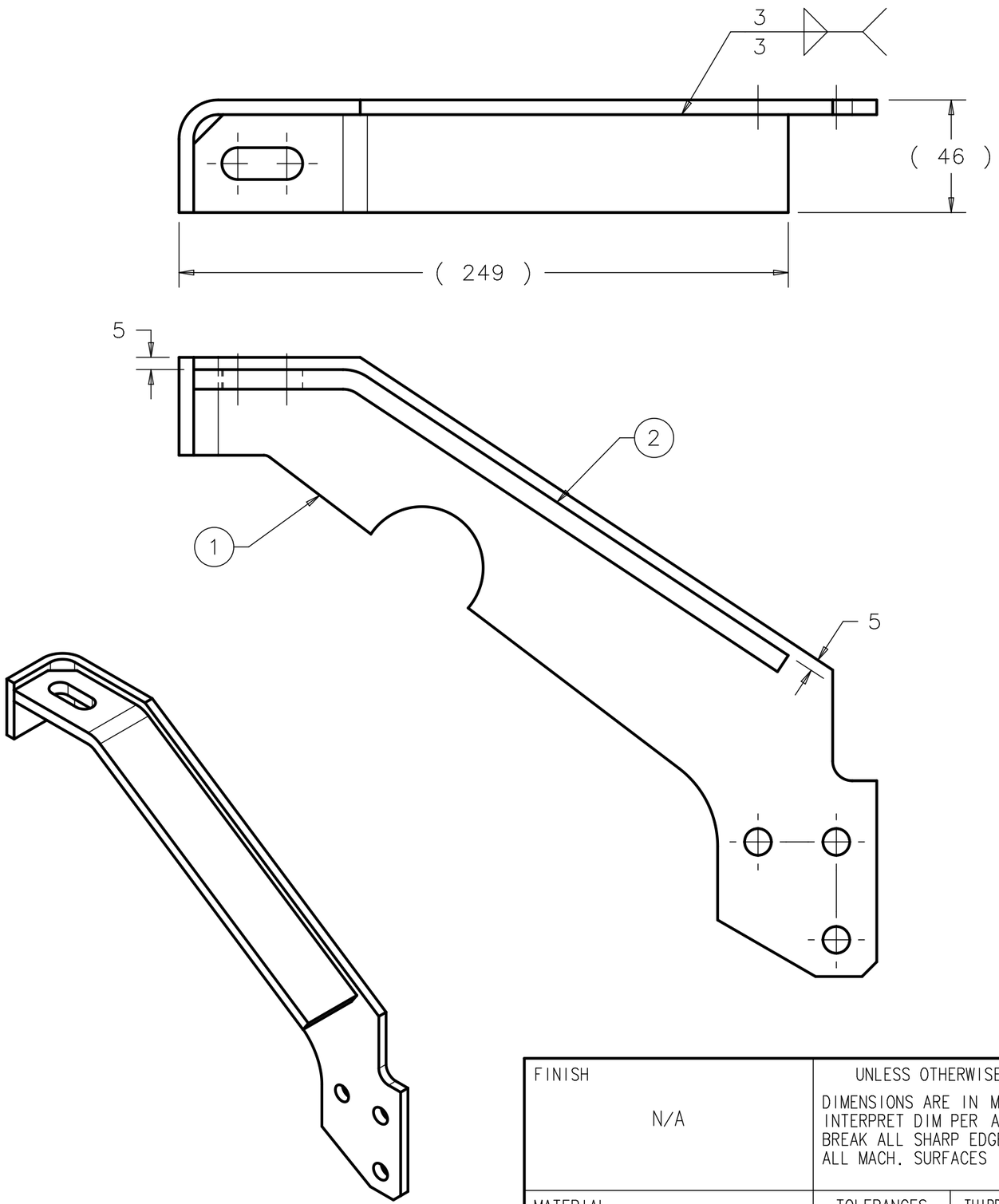

REVISION HISTORY

CAD MAINTAINED. CHANGES SHALL BE INCORPORATED BY THE DESIGN ACTIVITY.

ZONE	REV	DESCRIPTION	DATE	APPROVED
	A	INITIAL RELEASE ER ILC-000061		

NOTES (UNLESS OTHERWISE SPECIFIED):

1. ALL WELDS TO BE SMOOTH FOR COSMETIC APPEARANCE.
2. STEEL WELDS SHALL BE IN ACCORDANCE WITH THE LATEST REVISION OF ANSI/AWSD1.1, STRUCTURAL WELDING CODE - STEEL.
   - 2-1. THE WELDS SHALL HAVE NO CRACKS, THOROUGH FUSION, AND PROPER PROFILES. THE UNDERRUN, UNDERCUT, AND POROSITY OF THE WELDS MUST CONFORM TO THE CODE. ALL OF THE ABOVE PROPERTIES SHALL BE VISUALLY INSPECTED PER THE ACCEPTANCE CRITERIA IN AWS D1.1, TABLE 6.1.(REVISION 98).
   - 2-2. WELD REPAIRS AND WELDMENT STRAIGHTENING MAY BE PREFORMED PER AWSD1.1: 5.26. ENGINEERING APPROVAL MAY BE REQUIRED PER 5.26.3. (SECTION NUMBERS TAKEN FROM REVISION 98).
3. INTERIOR WELDS TO BE AS SMOOTH AS POSSIBLE, FINISH GRIND SMOOTH MAY BE REQUIRED.
4. ASSEMBLY MUST BE FREE OF DIRT, GREASE, OIL AND CHIPS.

ITEM	P.I.N.	DESCRIPTION	QTY
2	737151	SLOTTED MNTG PLATE, PIPE CLAMP	1
1	737121	HOLDER MOUNTING PLATE	1

PARTS LIST

NEXT ASSY	USED ON
737051	903915

APPLICATION

FINISH: N/A

MATERIAL: SEE PARTS LIST

UNLESS OTHERWISE SPECIFIED:
DIMENSIONS ARE IN MILLIMETERS
INTERPRET DIM PER ASME Y14.5M-1994
BREAK ALL SHARP EDGES 0.75 MAX.
ALL MACH. SURFACES 3.2 MAX.

TOLERANCES: X ± 1, .X ± --, .XX ± --, ANGLE ± 1°

THIRD ANGLE PROJECTION

DRAWN BY J. MONTELONGO	DATE 01SEP06	
CHECKED BY C.GRIMM	DATE 03FEB10	
ENGINEERED BY Y.ORLOV	DATE 03FEB10	
DATABASE DESY EDMS	TEAM/GROUP T4CM DESIGN	
CAD I-DEAS	SOLID MODEL NO. D00000000552063	

FERMI NATIONAL ACCELERATOR LABORATORY
UNITED STATES DEPARTMENT OF ENERGY
P.O. BOX 500, BATAVIA, IL 60510-0500

TITLE: ILC TYPE IV CRYOMODULE MAIN COUPLER PIPE_CLAMP_MOUNT_PLATE_WLDMT

SIZE	CAGE CODE	DWG NO.	REV
A3	0U5R6	D00000000737161	A

SCALE 1:2 | DO NOT SCALE DWG | SHEET 1 OF 1

REVISION HISTORY CAD MAINTAINED. CHANGES SHALL BE INCORPORATED BY THE DESIGN ACTIVITY.				
ZONE	REV	DESCRIPTION	DATE	APPROVED
	A	INITIAL RELEASE ER ILC-000061		

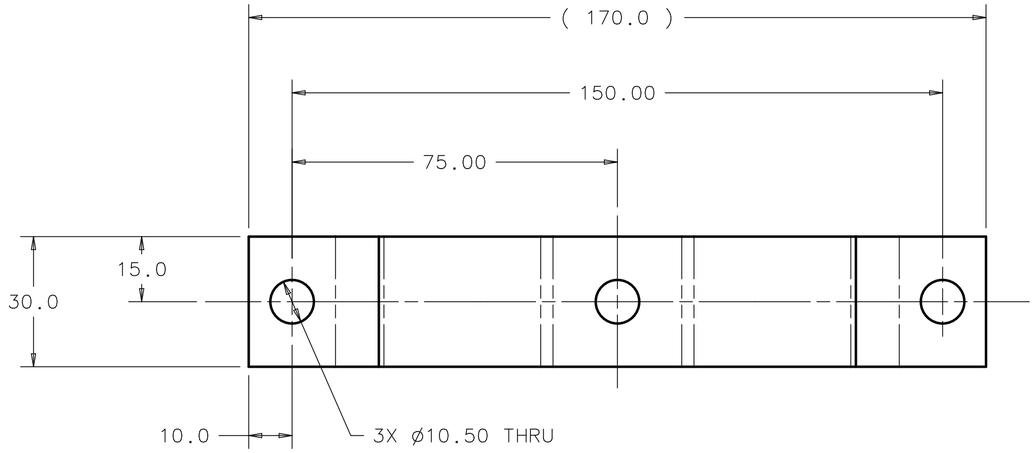

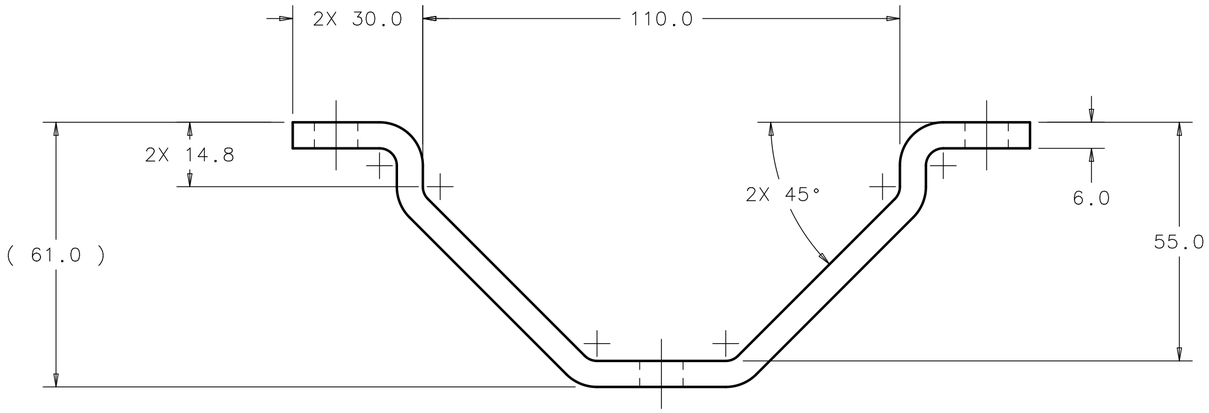

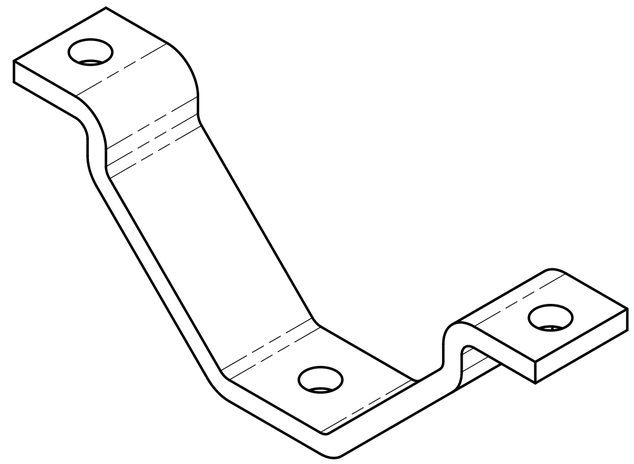

NOTES (UNLESS OTHERWISE SPECIFIED):

1. PART MUST BE FREE OF DIRT, GREASE, OIL AND CHIPS.
2. PART TO BE FREE OF ALL SHARP EDGES, CORNERS, AND BURRS.
3. ALL INSIDE BEND RADII TO BE 1X MATERIAL THICKNESS.

737051	903915
NEXT ASSY	USED ON
APPLICATION	

FINISH N/A	UNLESS OTHERWISE SPECIFIED: DIMENSIONS ARE IN MILLIMETERS INTERPRET DIM PER ASME Y14.5M-1994 BREAK ALL SHARP EDGES 0.75 MAX. ALL MACH. SURFACES 3.2 MAX.	DRAWN BY J. MONTELONGO	DATE 05SEP06	FERMI NATIONAL ACCELERATOR LABORATORY UNITED STATES DEPARTMENT OF ENERGY P.O. BOX 500, BATAVIA, IL 60510-0500
		CHECKED BY C.GRIMM	DATE 03FEB10	TITLE ILC TYPE IV CRYOMODULE MAIN COUPLER PIPE_CLAMP_BOTTOM
MATERIAL 304 STAINLESS STEEL ASTM A240	TOLERANCES X ± 1 .X ± 0.5 .XX ± 0.25 ANGLE ± 1°	ENGINEERED BY Y.ORLOV	DATE 03FEB10	
	THIRD ANGLE PROJECTION	DATABASE DESY EDMS	TEAM/GROUP T4CM DESIGN	SIZE A2 / CAGE CODE 0U5R6 / DWG NO. D00000000737641 / REV A
		CAD I-DEAS	SOLID MODEL NO. D00000000617442	SCALE 1:1 / DO NOT SCALE DWG / SHEET 1 OF 1

REVISION HISTORY CAD MAINTAINED. CHANGES SHALL BE INCORPORATED BY THE DESIGN ACTIVITY.				
ZONE	REV	DESCRIPTION	DATE	APPROVED
	A	INITIAL RELEASE ER ILC-000061		

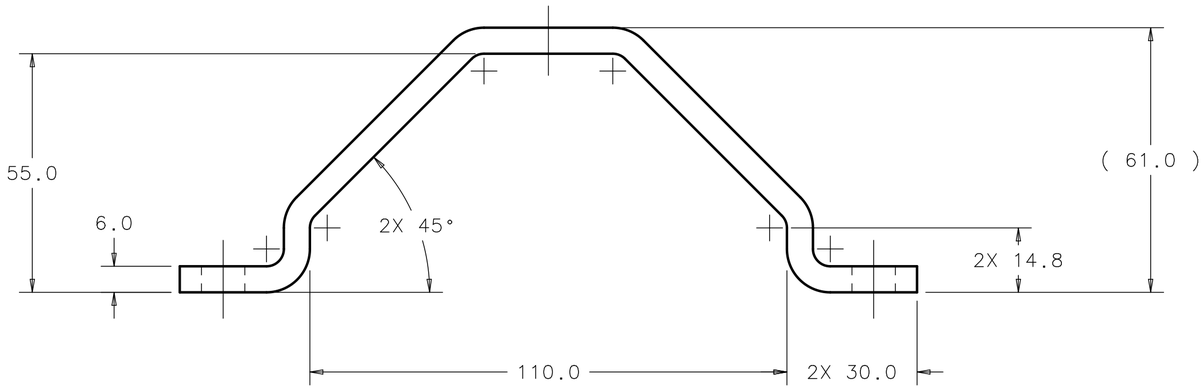

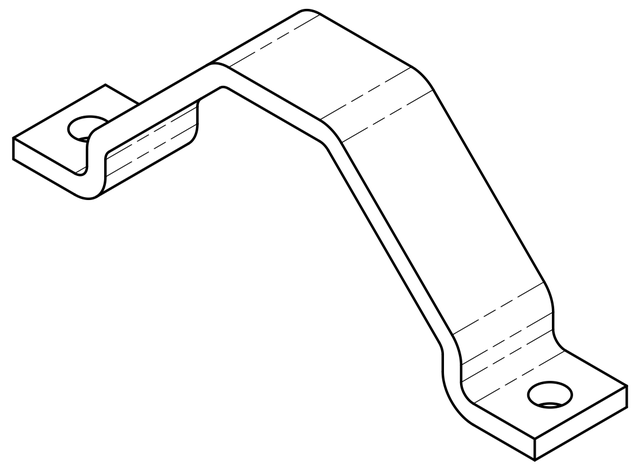

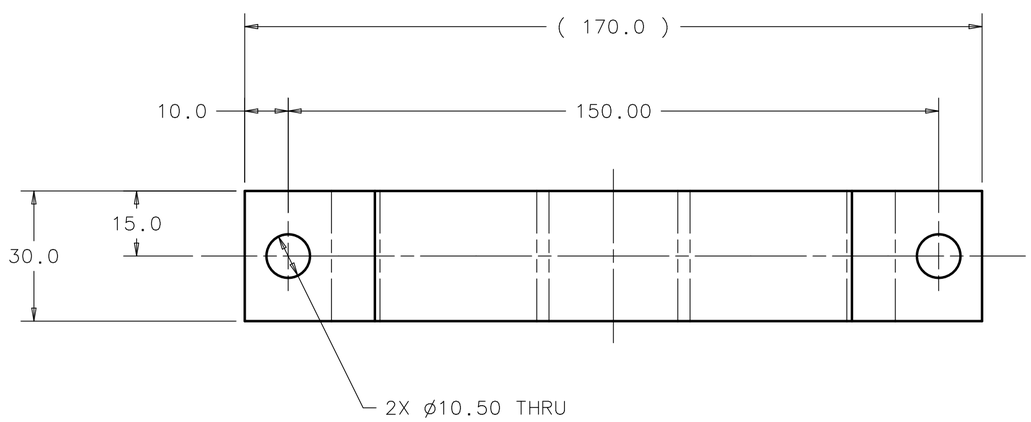

NOTES (UNLESS OTHERWISE SPECIFIED):

1. PART MUST BE FREE OF DIRT, GREASE, OIL AND CHIPS.
2. PART TO BE FREE OF ALL SHARP EDGES, CORNERS, AND BURRS.
3. ALL INSIDE BEND RADII TO BE 1X MATERIAL THICKNESS.

737051	903915
NEXT ASSY	USED ON
APPLICATION	

FINISH: N/A

MATERIAL: 304 STAINLESS STEEL ASTM A240

UNLESS OTHERWISE SPECIFIED:
DIMENSIONS ARE IN MILLIMETERS
INTERPRET DIM PER ASME Y14.5M-1994
BREAK ALL SHARP EDGES 0.75 MAX.
ALL MACH. SURFACES 3.2 MAX.

TOLERANCES: X ± 1, .X ± 0.5, .XX ± 0.25, ANGLE ± 1°

THIRD ANGLE PROJECTION

DRAWN BY: J. MONTELONGO	DATE: 05SEP06	
CHECKED BY: C.GRIMM	DATE: 03FEB10	
ENGINEERED BY: Y.ORLOV	DATE: 03FEB10	
DATABASE: DESY EDMS	TEAM/GROUP: T4CM DESIGN	
CAD: I-DEAS	SOLID MODEL NO.: D00000000617342	

FERMI NATIONAL ACCELERATOR LABORATORY
UNITED STATES DEPARTMENT OF ENERGY
P.O. BOX 500, BATAVIA, IL 60510-0500

TITLE: ILC TYPE IV CRYOMODULE MAIN COUPLER PIPE_CLAMP_TOP

SIZE	CAGE CODE	DWG NO.	REV
A2	0U5R6	D00000000737651	A

SCALE 1:1 | DO NOT SCALE DWG | SHEET 1 OF 1

NOTES (UNLESS OTHERWISE SPECIFIED):

1. PART MUST BE FREE OF DIRT, GREASE, OIL AND CHIPS.
2. PART TO BE FREE OF ALL SHARP EDGES, CORNERS, AND BURRS.

REVISION HISTORY

CAD MAINTAINED. CHANGES SHALL BE INCORPORATED BY THE DESIGN ACTIVITY.

ZONE	REV	DESCRIPTION	DATE	APPROVED
	A	INITIAL RELEASE: ER# ILC-000048		

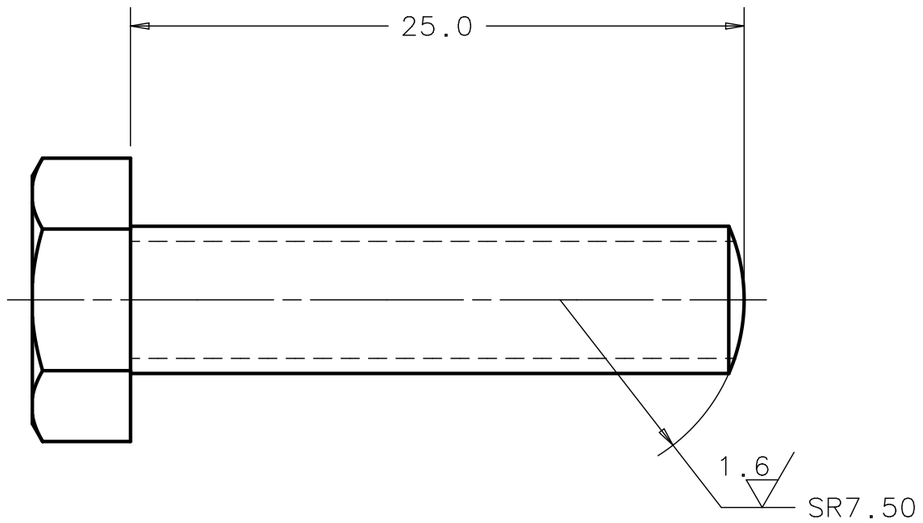

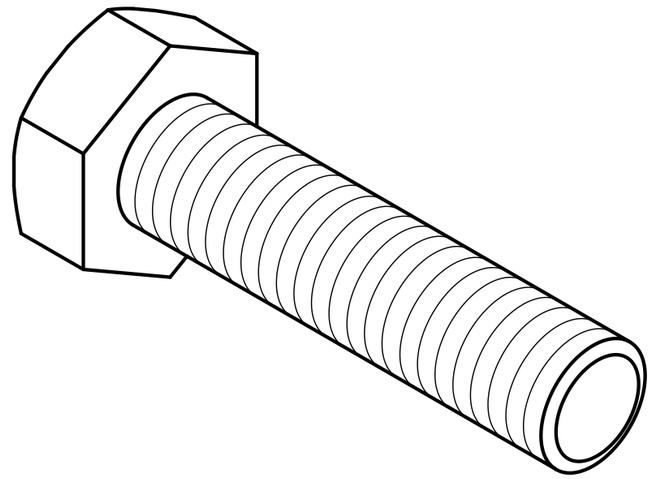

804605	806435
804605	789655
804605	788515
NEXT ASSY	USED ON
APPLICATION	

FINISH: N/A

MATERIAL: M6 X 1 X 25 LG HEX HD SCREW SILICON BRONZE

UNLESS OTHERWISE SPECIFIED:
DIMENSIONS ARE IN MILLIMETERS
INTERPRET DIM PER ASME Y14.5M-1994
BREAK ALL SHARP EDGES .75 MAX.
ALL MACH. SURFACES 3.2 MAX.

TOLERANCES: X ± -- ; .X ± 0.5 ; .XX ± -- ; ANGLE ± --

THIRD ANGLE PROJECTION

DRAWN BY V. MARTINEZ	DATE 01FEB10	
CHECKED BY C.GRIMM	DATE 02FEB10	
ENGINEERED BY Y.ORLOV	DATE 02FEB10	
DATABASE DESY EDMS	TEAM/GROUP T4CM DESIGN	
CAD I-DEAS	SOLID MODEL NO. D00000000626432	

FERMI NATIONAL ACCELERATOR LABORATORY
UNITED STATES DEPARTMENT OF ENERGY
P.O. BOX 500, BATAVIA, IL 60510-0500

TITLE: ILC TYPE IV CRYOMODULE HGR PIPE T4CM HEX_HEAD_BOLT_SPECIAL_M6X1

SIZE	CAGE CODE	DWG NO.	REV
A3	0U5R6	D00000000740361	A

SCALE 4:1 | DO NOT SCALE DWG | SHEET 1 OF 1

NOTES (UNLESS OTHERWISE SPECIFIED):

1. PART MUST BE FREE OF DIRT, GREASE, OIL AND CHIPS.
2. PART TO BE FREE OF ALL SHARP EDGES, CORNERS, AND BURRS.

REVISION HISTORY

CAD MAINTAINED. CHANGES SHALL BE INCORPORATED BY THE DESIGN ACTIVITY.

ZONE	REV	DESCRIPTION	DATE	APPROVED
	A	INITIAL RELEASE: ER# ILC-000048		

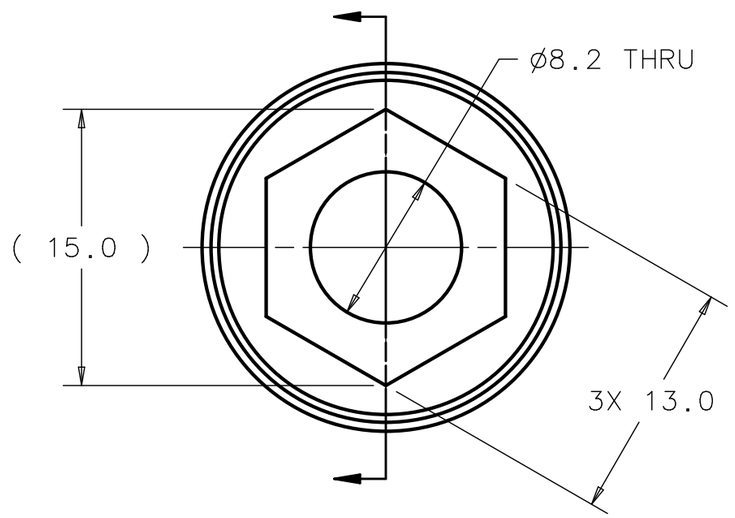

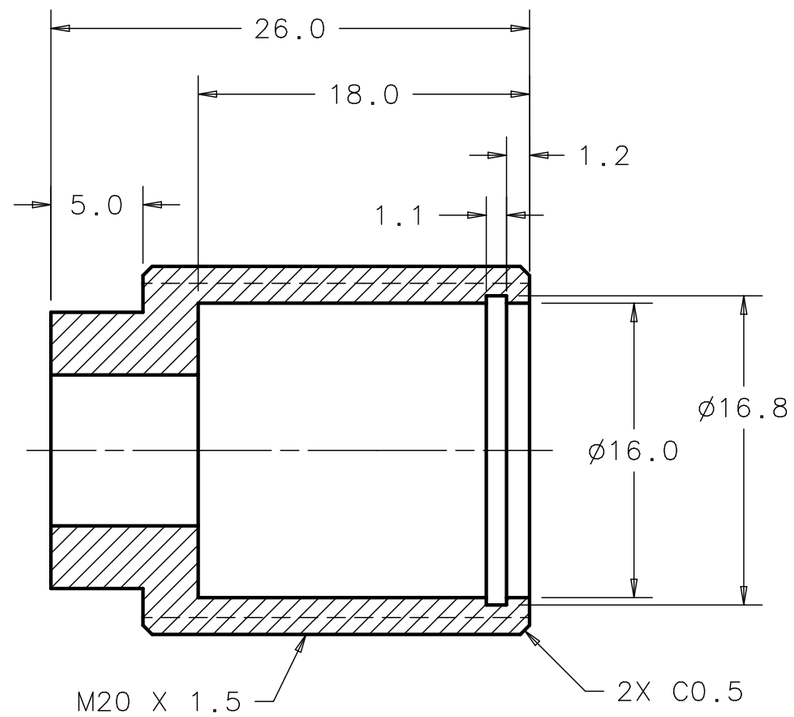

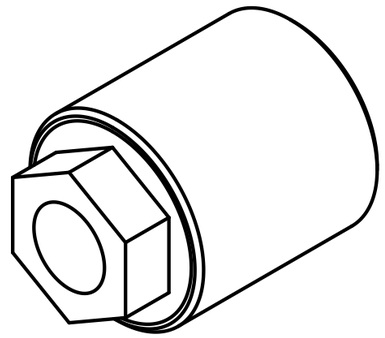

789655	788275
788515	788275
NEXT ASSY	USED ON
APPLICATION	

FINISH: N/A

UNLESS OTHERWISE SPECIFIED:
DIMENSIONS ARE IN MILLIMETERS
INTERPRET DIM PER ASME Y14.5M-1994
BREAK ALL SHARP EDGES .75 MAX.
ALL MACH. SURFACES 3.2 MAX.

MATERIAL: BRASS - ALLOY 360

TOLERANCES: X ± -- ; .X ± 0.5 ; .XX ± -- ; ANGLE ± 1°

THIRD ANGLE PROJECTION

DRAWN BY: V. MARTINEZ	DATE: 01FEB10	
CHECKED BY: C.GRIMM	DATE: 01FEB10	
ENGINEERED BY: Y.ORLOV	DATE: 02FEB10	
DATABASE: DESY EDMS	TEAM/GROUP: T4CM	
CAD: I-DEAS	SOLID MODEL NO.: D00000000626472	

FERMI NATIONAL ACCELERATOR LABORATORY
UNITED STATES DEPARTMENT OF ENERGY
P.O. BOX 500, BATAVIA, IL 60510-0500

TITLE: ILC TYPE IV CRYOMODULE HGR PIPE T4CM BUSHING

SIZE	CAGE CODE	DWG NO.	REV
A3	0U5R6	D00000000740371	A

SCALE 3:1 | DO NOT SCALE DWG | SHEET 1 OF 1

REVISION HISTORY CAD MAINTAINED. CHANGES SHALL BE INCORPORATED BY THE DESIGN ACTIVITY.				
ZONE	REV	DESCRIPTION	DATE	APPROVED
	A	INITIAL RELEASE ER ILC-000061		

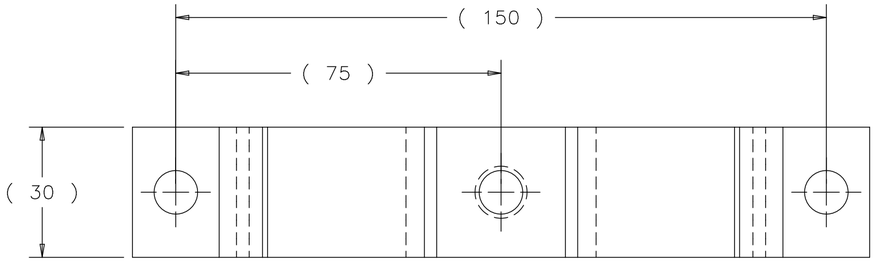

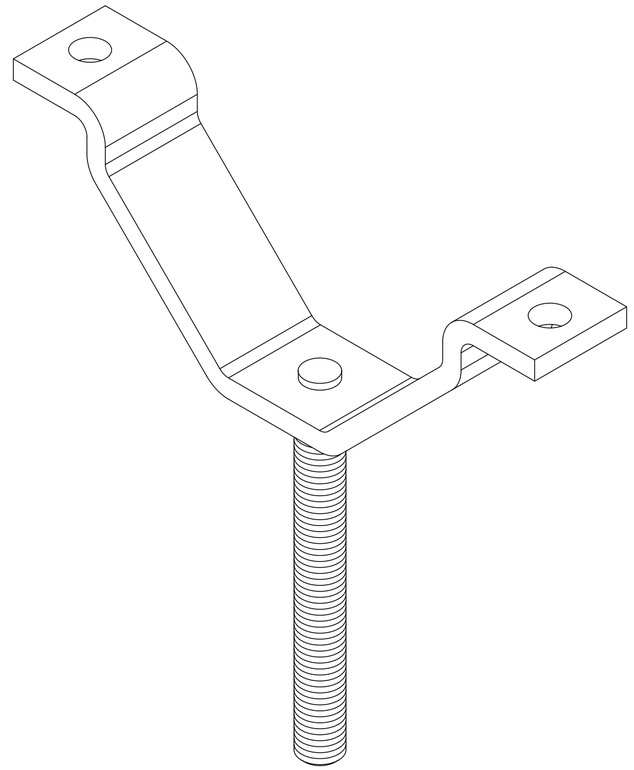

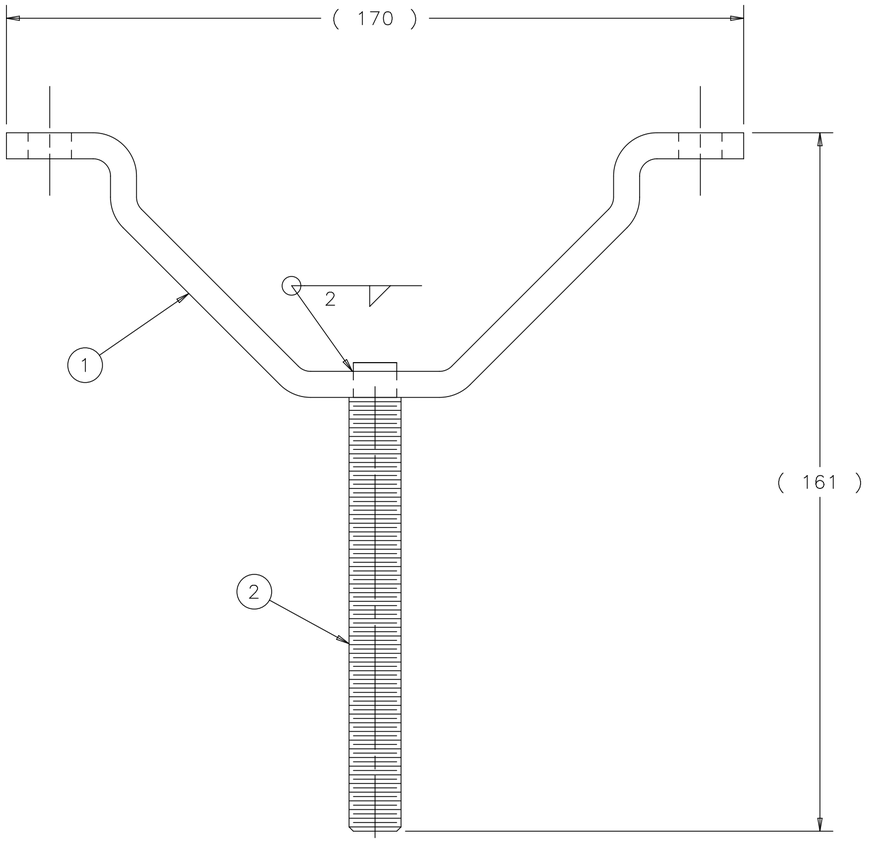

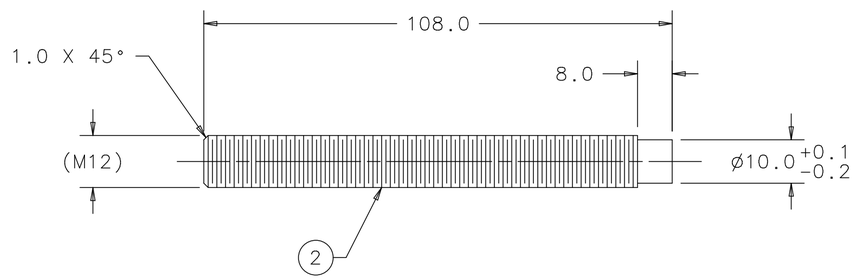

ITEM	P.I.N.	DESCRIPTION	QTY
2	COML	THREADED ROD M12 X 1.75 304 STAINLESS STEEL	1
1	737641	PIPE CLAMP BOTTOM	1

PARTS LIST

NOTES (UNLESS OTHERWISE SPECIFIED):

1. WELD TO BE SMOOTH FOR COSMETIC APPEARANCE.
2. WELDMENT MUST BE FREE OF DIRT, GREASE, OIL AND CHIPS.

737051	903915
NEXT ASSY	USED ON
APPLICATION	

FINISH: N/A

MATERIAL: SEE PARTS LIST

UNLESS OTHERWISE SPECIFIED:
DIMENSIONS ARE IN MILLIMETERS
INTERPRET DIM PER ASME Y14.5M-1994
BREAK ALL SHARP EDGES 0.75 MAX.
ALL MACH. SURFACES 3.2 MAX.

TOLERANCES: X ± 1, .X ± 0.5, .XX ± --, ANGLE ± 1°

THIRD ANGLE PROJECTION

DRAWN BY S. POREMBA	DATE 02JUL07		
CHECKED BY C.GRIMM	DATE 03FEB10		
ENGINEERED BY Y.ORLOV	DATE 03FEB10		
DATABASE DESY EDMS	TEAM/GROUP T4CM DESIGN		
CAD I-DEAS	SOLID MODEL NO. D00000000613073		

FERMI NATIONAL ACCELERATOR LABORATORY
UNITED STATES DEPARTMENT OF ENERGY
P.O. BOX 500, BATAVIA, IL 60510-0500

TITLE: ILC TYPE IV CRYOMODULE MAIN COUPLER CLAMP_PIPE_BOTTOM_WLDMT

SIZE	CAGE CODE	DWG NO.	REV
A2	0U5R6	D00000000792075	A

SCALE 1:1 | DO NOT SCALE DWG | SHEET 1 OF 1

Created: 10:39:56 on 04-02-10 (D-M-Y) By: dmitchel State: 1-INITIAL

*NOTES (UNLESS OTHERWISE SPECIFIED):

1. TRANSITION FROM R122.0 TO 123.0 MUST ACURE BETWEEN ANGLE GIVEN, RADII & BEND ANGLE TO BE DETERMINED BY VENDER.
2. TRANSITION FROM R128.0 TO 127.0 MUST ACURE BETWEEN ANGLE GIVEN, RADII & BEND ANGLE TO BE DETERMINED BY VENDER.
3. PEMNUT HOLE SIZE TO BE DETERMINED BY VENDORS CHOICE OF PEMNUT STYLE. PEMNUT THREAD SIZE SHALL BE MAINTAINED AS PER ASSEMBLY DRAWING #792635.
4. VENDER SHALL FOLLOW FERMILAB ENGINEERING SPECIFICATION 5500-ES-371041 WHEN COSTING, FABRICATING, PACKING, AND SHIPPING ALL SHIELD PARTS AND SHIELD ASSEMBLIES.

REVISION HISTORY
CAD MAINTAINED. CHANGES SHALL BE INCORPORATED BY THE DESIGN ACTIVITY.

ZONE	REV	DESCRIPTION	DATE	APPROVED
	A	INITIAL RELEASE ER # ILC-000011	06FEB09	

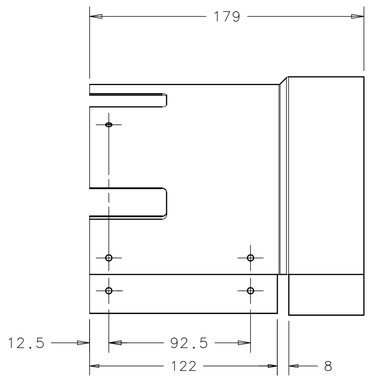

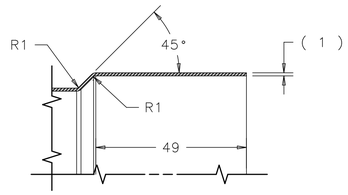

SECTION C-C
SCALE 1:1

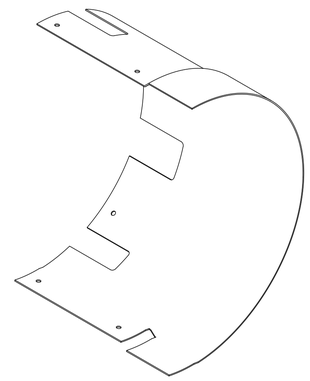

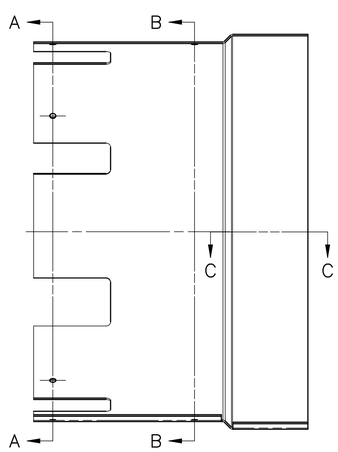

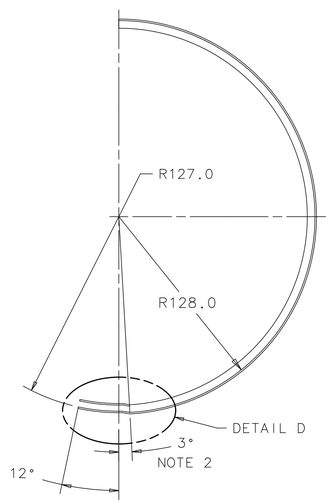

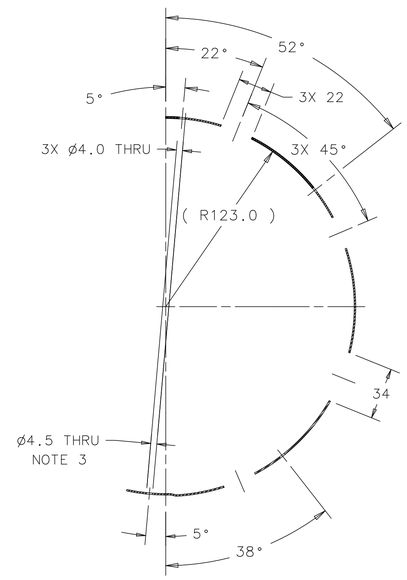

SECTION A-A

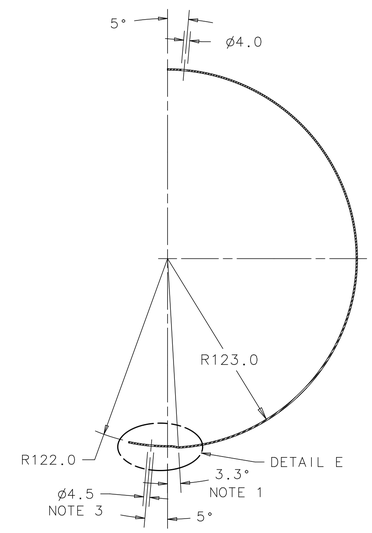

SECTION B-B

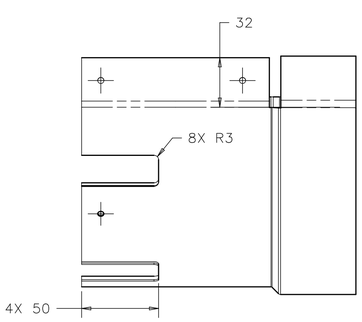

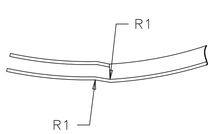

DETAIL D
SCALE 1:1

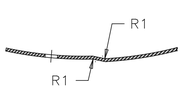

DETAIL E
SCALE 1:1

	792635
NEXT ASSY	USED ON
APPLICATION	

FINISH: NOTE 4

MATERIAL: CRYOPERM 10, 1 MM THICK

UNLESS OTHERWISE SPECIFIED:
DIMENSIONS ARE IN MILLIMETERS
INTERPRET DIM PER ASME Y14.5M-1994
BREAK ALL SHARP EDGES 0.75 MAX.
ALL MACH. SURFACES 3.2 MAX.

TOLERANCES: X ± 1, X.X ± 0.5, X.XX ± -, ANGLE ± 1°

THIRD ANGLE PROJECTION

DRAWN BY: W. SHARP	DATE: 10JUL07	
CHECKED BY: C. GRIMM	DATE: 17MAR09	
ENGINEERED BY: Y. ORLOV	DATE: 17MAR09	
DATABASE: DESY EDMS	TEAM/GROUP: T4CM DESIGN	
CAD: I-DEAS	SOLID MODEL NO.: D00000000776142	

FERMI NATIONAL ACCELERATOR LABORATORY
UNITED STATES DEPARTMENT OF ENERGY
P.O. BOX 500, BATAVIA, IL 60510-0500

TITLE: ILC - CRYOMODULE - TYPE IV HELIUM VESSEL 1-3GHZ_MAGNETIC_SHIELD_BT1

SIZE	CAGE CODE	DWG NO.	REV
A1	0U5R6	D00000000792535	A

SCALE 1:2 | DO NOT SCALE DRAWING | SHEET 1 OF 1

Created: 09:09:45 on 17-03-09 (D-M-Y) By: orlov State: 1-INITIAL

NOTES (UNLESS OTHERWISE SPECIFIED):

1. TRANSITION FROM R122.0 TO 123.0 MUST ACURE BETWEEN ANGLE GIVEN, RADII & BEND ANGLE TO BE DETERMINED BY VENDER.
2. TRANSITION FROM R130.0 TO 129.0 MUST ACURE BETWEEN ANGLE GIVEN, RADII & BEND ANGLE TO BE DETERMINED BY VENDER.
3. PEMNUT HOLE SIZE TO BE DETERMINED BY VENDORS CHOICE OF PEMNUT STYLE. PEMNUT THREAD SIZE SHALL BE MAINTAINED AS PER ASSEMBLY DRAWING #792815.
4. VENDER SHALL FOLLOW FERMILAB ENGINEERING SPECIFICATION 5500-ES-371041 WHEN COSTING, FABRICATING, PACKING, AND SHIPPING ALL SHIELD PARTS AND SHIELD ASSEMBLIES.

REVISION HISTORY
CAD MAINTAINED. CHANGES SHALL BE INCORPORATED BY THE DESIGN ACTIVITY.

ZONE	REV	DESCRIPTION	DATE	APPROVED
	A	INITIAL RELEASE ER # ILC-000011	06FEB09	

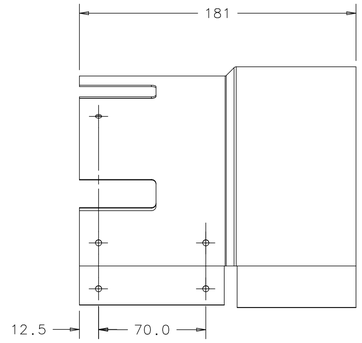

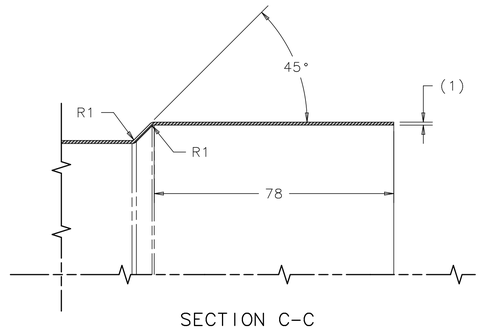

SECTION C-C
SCALE 1:1

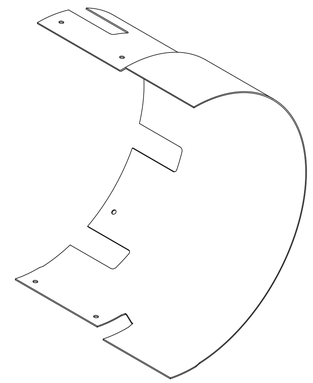

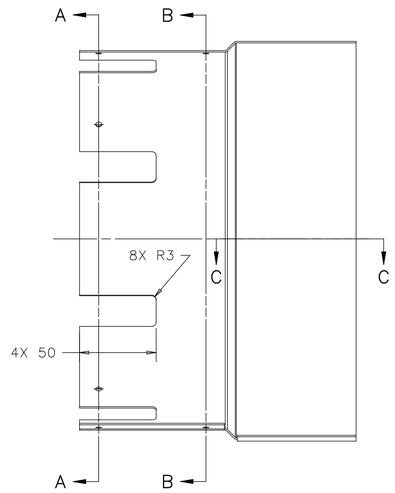

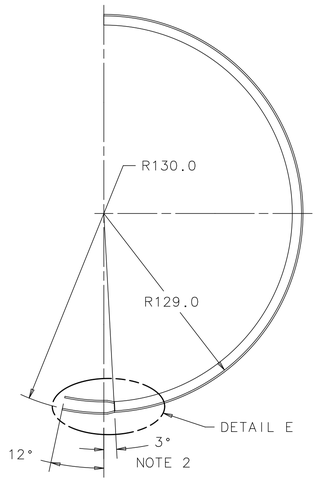

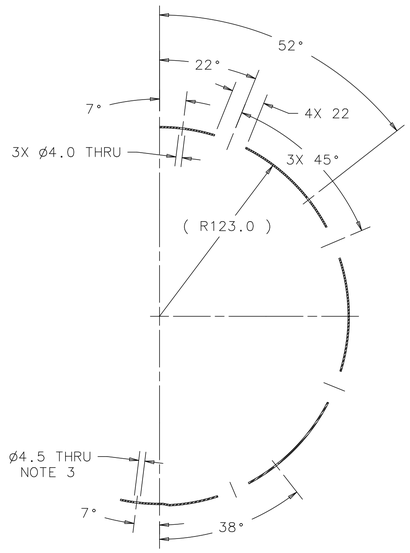

SECTION A-A

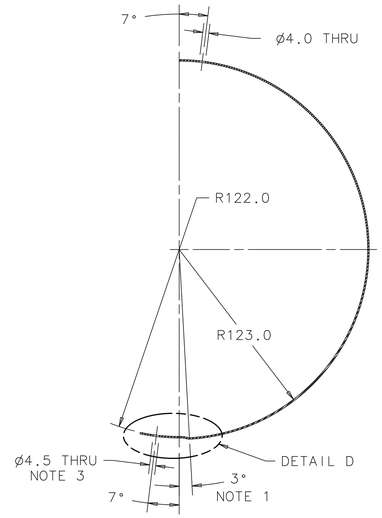

SECTION B-B

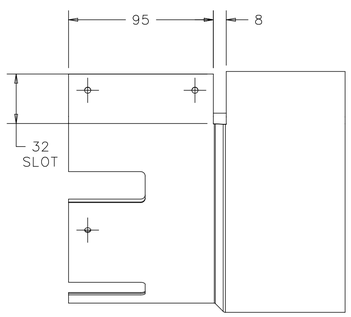

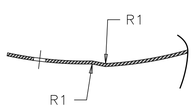

DETAIL D
SCALE 1:1

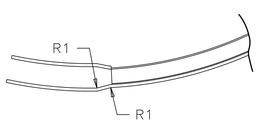

DETAIL E
SCALE 1:1

-	792815
NEXT ASSY	USED ON
APPLICATION	

FINISH: NOTE 4

MATERIAL: CRYOPERM 10, 1 MM THICK

UNLESS OTHERWISE SPECIFIED:
DIMENSIONS ARE IN MILLIMETERS
INTERPRET DIM PER ASME Y14.5M-1994
BREAK ALL SHARP EDGES 0.75 MAX.
ALL MACH. SURFACES 3.2 MAX.

TOLERANCES: X ± 1, X.X ± 0.5, X.XX ± ANGLE ± 1°

THIRD ANGLE PROJECTION

DRAWN BY	S. POREMBA	DATE 10JUL07
CHECKED BY	C. GRIMM	DATE 17MAR09
ENGINEERED BY	Y. ORLOV	DATE 17MAR09
DATABASE	DESY EDMS	TEAM/GROUP T4CM DESIGN
CAD	I-DEAS	SOLID MODEL NO. D00000000776152

FERMI NATIONAL ACCELERATOR LABORATORY
UNITED STATES DEPARTMENT OF ENERGY
P.O. BOX 500, BATAVIA, IL 60510-0500

TITLE: ILC - CRYOMODULE - TYPE IV HELIUM VESSEL 1-3GHZ_MAGNETIC_SHIELD_BT2

SIZE	CAGE CODE	DWG NO.	REV
A1	0U5R6	D00000000792545	A

SCALE 1:2 | DO NOT SCALE DRAWING | SHEET 1 OF 1

Created: 09:11:54 on 17-03-09 (D-M-Y) By: orlov State: 1-INITIAL

REVISION HISTORY CAD MAINTAINED. CHANGES SHALL BE INCORPORATED BY THE DESIGN ACTIVITY.				
ZONE	REV	DESCRIPTION	DATE	APPROVED
	A	INITIAL RELEASE ER # ILC-000011	06FEB09	

NOTES (UNLESS OTHERWISE SPECIFIED):

1. TRANSITION FROM R122.0 TO 123.0 MUST ACURE BETWEEN ANGLE GIVEN, RADII & BEND ANGLE TO BE DETERMINED BY VENDER.
2. PEMNUT HOLE SIZE TO BE DETERMINED BY VENDORS CHOICE OF PEMNUT STYLE. PEMNUT THREAD SIZE SHALL BE MAINTAINED AS PER ASSEMBLY DRAWING #792825.
3. VENDER SHALL FOLLOW FERMILAB ENGINEERING SPECIFICATION 5500-ES-371041 WHEN COSTING, FABRICATING, PACKING, AND SHIPPING ALL SHIELD PARTS AND SHIELD ASSEMBLIES.

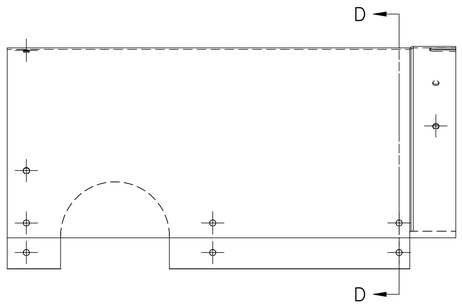

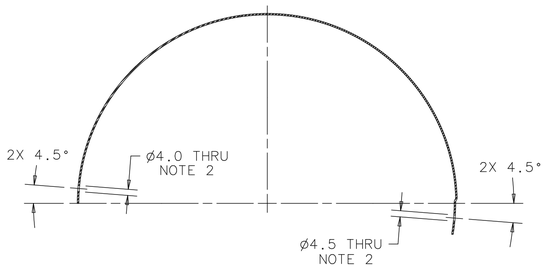

SECTION D-D

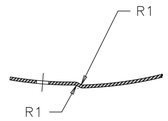

DETAIL E
SCALE 1:1

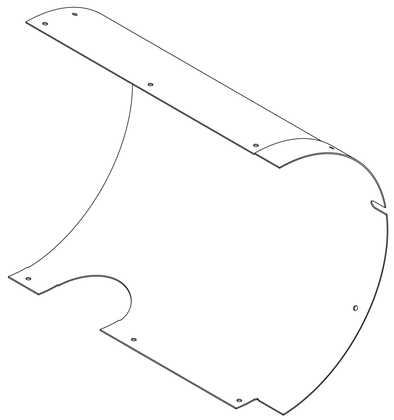

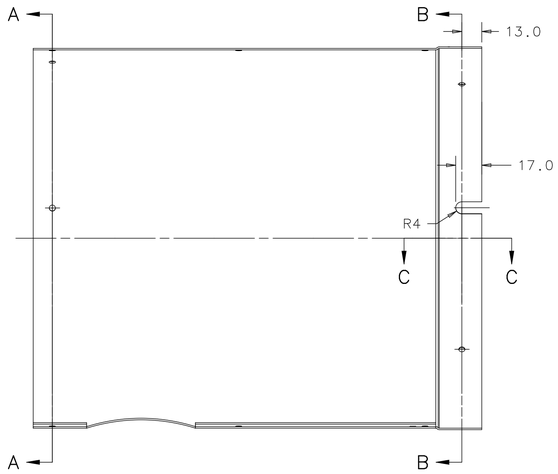

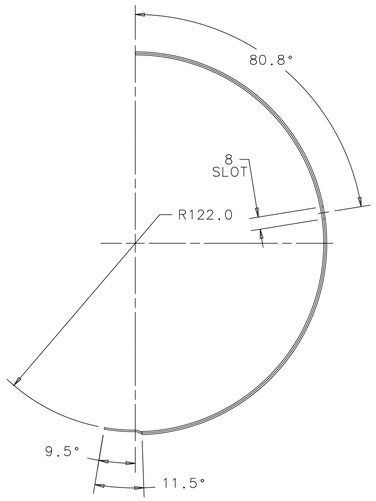

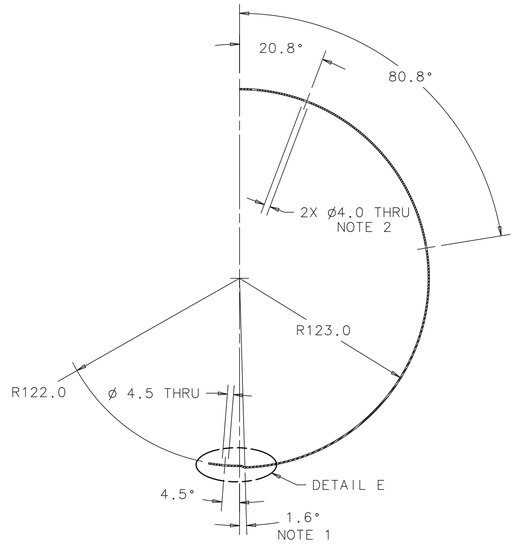

SECTION A-A

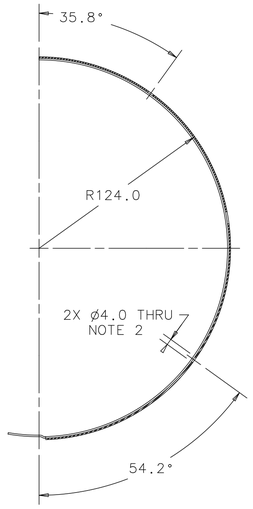

SECTION B-B

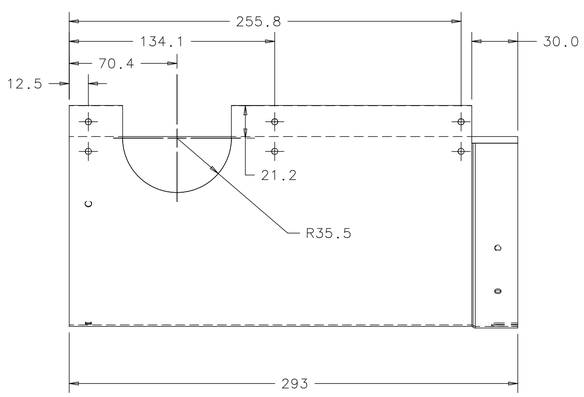

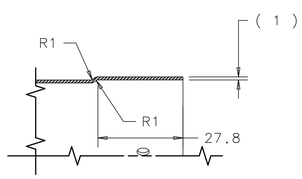

SECTION C-C
SCALE 1:1

-	792825
NEXT ASSY	USED ON
APPLICATION	

FINISH NOTE 3	UNLESS OTHERWISE SPECIFIED: DIMENSIONS ARE IN MILLIMETERS INTERPRET DIM PER ASME Y14.5M-1994 BREAK ALL SHARP EDGES 0.75 MAX. ALL MACH. SURFACES 3.2 MAX.	DRAWN BY S. POREMBA	DATE 10JUL07
		CHECKED BY C. GRIMM	DATE 17MAR09
		ENGINEERED BY Y. ORLOV	DATE 17MAR09
MATERIAL CRYOPERM 10, 1 MM THICK	TOLERANCES X ± 1 X.X ± 0.5 X.XX ± - ANGLE ± 1°	DATABASE DESY EDMS	TEAM/GROUP T4CM DESIGN
	THIRD ANGLE PROJECTION	CAD I-DEAS	SOLID MODEL NO. D00000000776162

FERMI NATIONAL ACCELERATOR LABORATORY
UNITED STATES DEPARTMENT OF ENERGY
P.O. BOX 500, BATAVIA, IL 60510-0500

TITLE
ILC -CRYOMODULE - TYPE IV
HELIUM VESSEL
1-3_MAGNETIC_SHIELD_DWNSTRM_2B

SIZE	CAGE CODE	DWG NO.	REV
A1	0U5R6	D00000000792555	A
SCALE 1:2		DO NOT SCALE DRAWING	SHEET 1 OF 1

Created: 09:10:55 on 17-03-09 (D-M-Y) By: orlov State: 1-INITIAL

NOTES (UNLESS OTHERWISE SPECIFIED):

1. TRANSITION FROM R122.0 TO 123.0 MUST ACURE BETWEEN ANGLE GIVEN, RADII & BEND ANGLE TO BE DETERMINED BY VENDER.
2. PEMNUT HOLE SIZE TO BE DETERMINED BY VENDORS CHOICE OF PEMNUT STYLE. PEMNUT THREAD SIZE SHALL BE MAINTAINED AS PER ASSEMBLY DRAWING #792825.
3. VENDER SHALL FOLLOW FERMILAB ENGINEERING SPECIFICATION 5500-ES-371041 WHEN COSTING, FABRICATING, PACKING, AND SHIPPING ALL SHIELD PARTS AND SHIELD ASSEMBLIES.

REVISION HISTORY
CAD MAINTAINED. CHANGES SHALL BE INCORPORATED BY THE DESIGN ACTIVITY.

ZONE	REV	DESCRIPTION	DATE	APPROVED
	A	INITIAL RELEASE ER # ILC-000011	06FEB09	

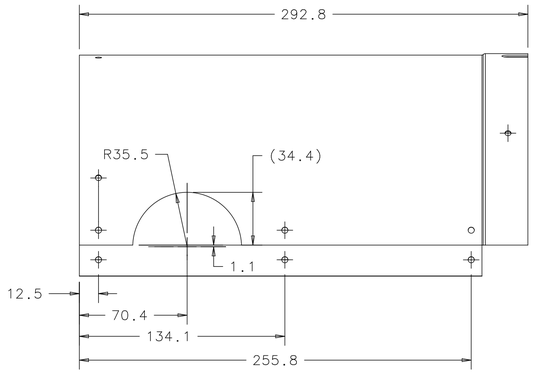

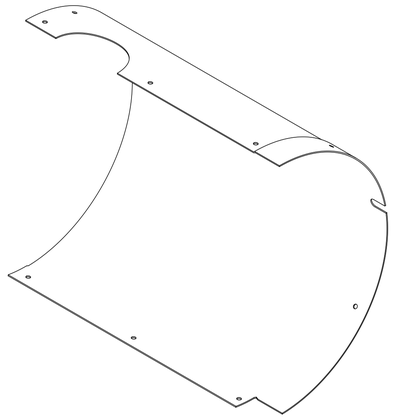

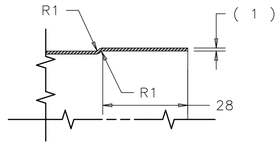

SECTION C-C
SCALE 1:1

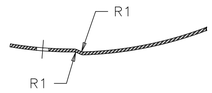

DETAIL E
SCALE 1:1

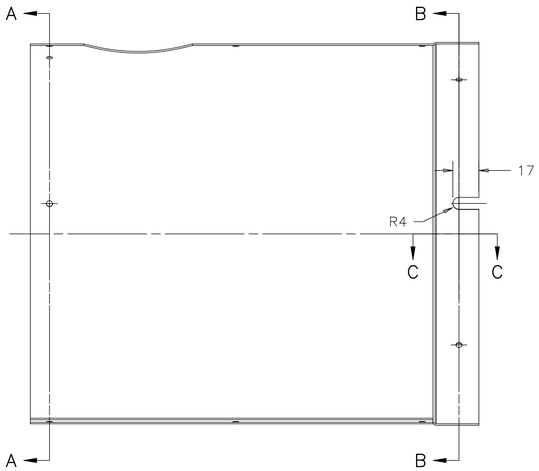

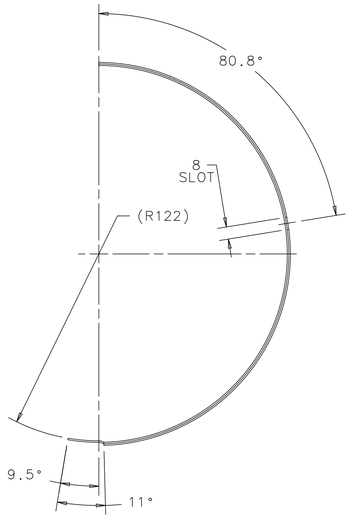

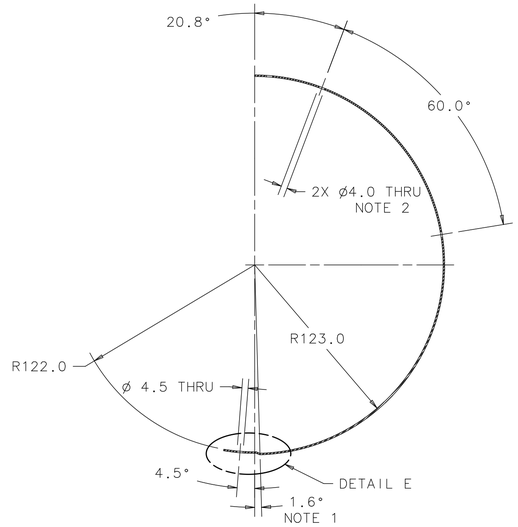

SECTION A-A

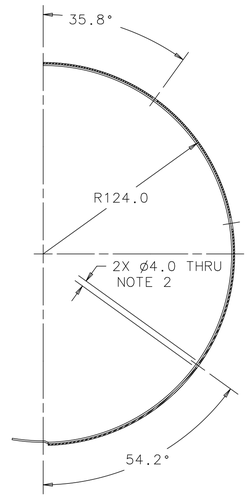

SECTION B-B

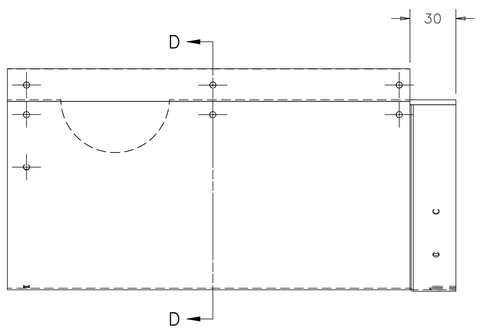

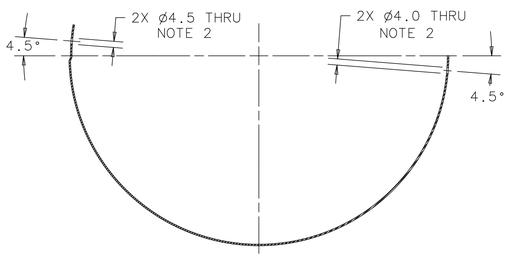

SECTION D-D

-	792825
NEXT ASSY	USED ON
APPLICATION	

FINISH: NOTE 3

MATERIAL: CRYOPERM 10, 1 MM THICK

UNLESS OTHERWISE SPECIFIED:
DIMENSIONS ARE IN MILLIMETERS
INTERPRET DIM PER ASME Y14.5M-1994
BREAK ALL SHARP EDGES 0.75 MAX.
ALL MACH. SURFACES 3.2 MAX.

TOLERANCES: X ± 1, X.X ± 0.5, X.XX ± -, ANGLE ± 1°

THIRD ANGLE PROJECTION

DRAWN BY: S. POREMBA	DATE: 10JUL07	
CHECKED BY: C. GRIMM	DATE: 17MAR09	
ENGINEERED BY: Y. ORLOV	DATE: 17MAR09	
DATABASE: DESY EDMS	TEAM/GROUP: T4CM DESIGN	
CAD: I-DEAS	SOLID MODEL NO.: D00000000776172	

FERMI NATIONAL ACCELERATOR LABORATORY
UNITED STATES DEPARTMENT OF ENERGY
P.O. BOX 500, BATAVIA, IL 60510-0500

TITLE: ILC - CRYOMODULE - TYPE IV HELIUM VESSEL 1-3_MAGNETIC_SHIELD_DWNSTRM_2A

SIZE	CAGE CODE	DWG NO.	REV
A1	0U5R6	D00000000792565	A

SCALE 1:2 | DO NOT SCALE DRAWING | SHEET 1 OF 1

Created: 09:10:44 on 17-03-09 (D-M-Y) By: orlov State: 1-INITIAL

NOTES (UNLESS OTHERWISE SPECIFIED):

1. TRANSITION FROM R122.0 TO 123.0 MUST ACURE BETWEEN ANGLE GIVEN, RADII & BEND ANGLE TO BE DETERMINED BY VENDER.
2. PEMNUT HOLE SIZE TO BE DETERMINED BY VENDORS CHOICE OF PEMNUT STYLE. PEMNUT THREAD SIZE SHALL BE MAINTAINED AS PER ASSEMBLY DRAWING #792835.
3. VENDER SHALL FOLLOW FERMILAB ENGINEERING SPECIFICATION 5500-ES-371041 WHEN COSTING, FABRICATING, PACKING, AND SHIPPING ALL SHIELD PARTS AND SHIELD ASSEMBLIES.

REVISION HISTORY
CAD MAINTAINED. CHANGES SHALL BE INCORPORATED BY THE DESIGN ACTIVITY.

ZONE	REV	DESCRIPTION	DATE	APPROVED
	A	INITIAL RELEASE ER # ILC-000011	06FEB09	

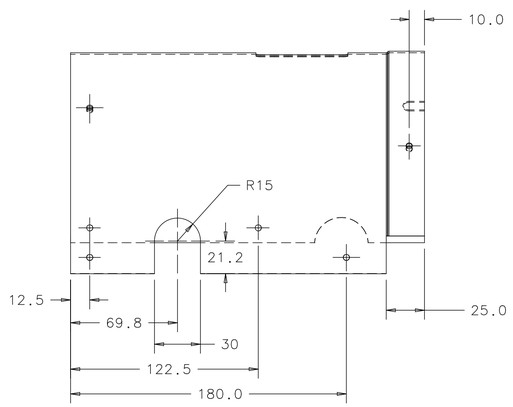

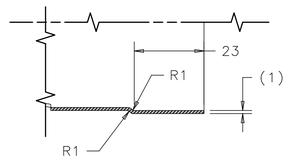

SECTION C-C
SCALE 1:1

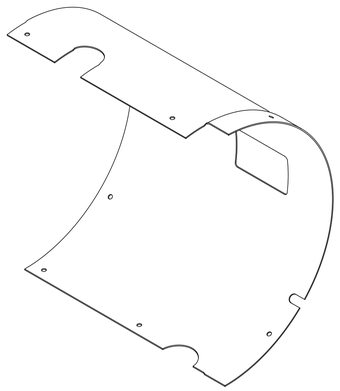

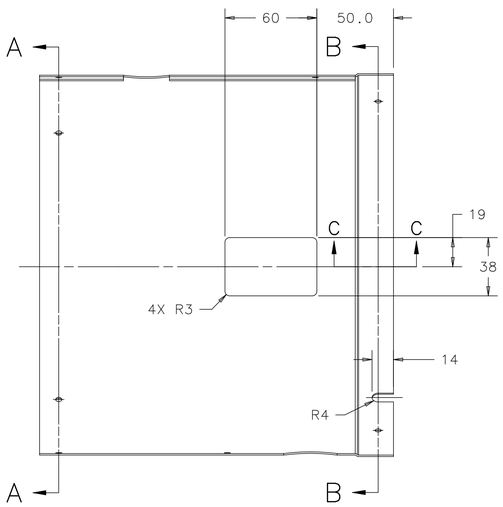

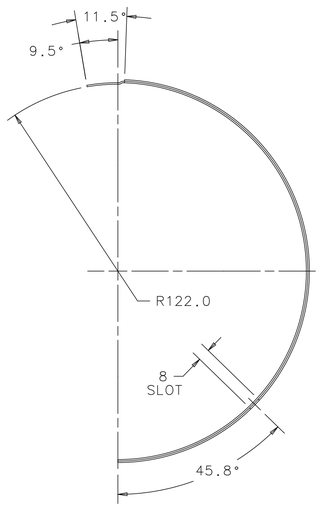

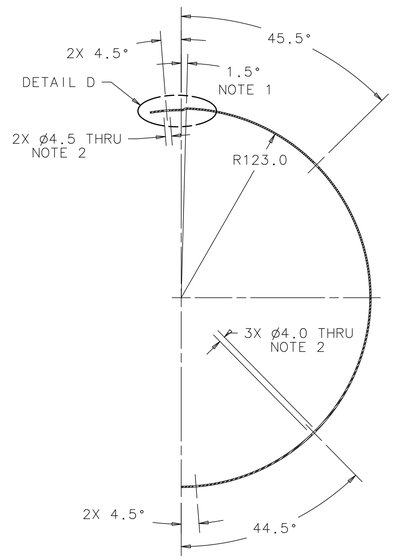

SECTION A-A

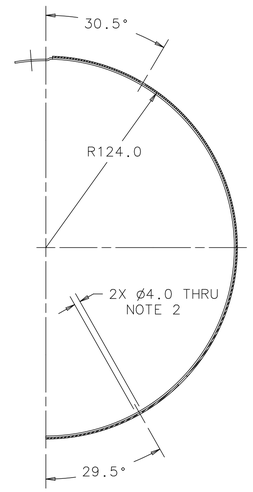

SECTION B-B

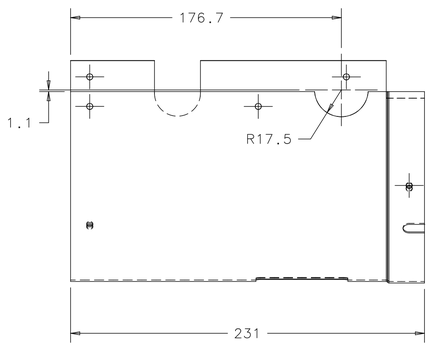

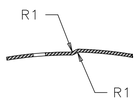

DETAIL D
SCALE 1:1

-	792835
NEXT ASSY	USED ON
APPLICATION	

FINISH: NOTE 3

MATERIAL: CRYOPERM 10, 1 MM THICK

UNLESS OTHERWISE SPECIFIED:
DIMENSIONS ARE IN MILLIMETERS
INTERPRET DIM PER ASME Y14.5M-1994
BREAK ALL SHARP EDGES 0.75 MAX.
ALL MACH. SURFACES 3.2 MAX.

TOLERANCES: X ± 1, X.X ± 0.5, X.XX ± -, ANGLE ± 1°

THIRD ANGLE PROJECTION

DRAWN BY: S. POREMBA	DATE: 10JUL07	
CHECKED BY: C. GRIMM	DATE: 17MAR09	
ENGINEERED BY: Y. ORLOV	DATE: 17MAR09	
DATABASE: DESY EDMS	TEAM/GROUP: T4CM DESIGN	
CAD: I-DEAS	SOLID MODEL NO.: D000000000776202	

FERMI NATIONAL ACCELERATOR LABORATORY
UNITED STATES DEPARTMENT OF ENERGY
P.O. BOX 500, BATAVIA, IL 60510-0500

TITLE: ILC - CRYOMODULE - TYPE IV HELIUM VESSEL 1-3_MAGNETIC_SHIELD_MAIN_CPLR_2B

SIZE	CAGE CODE	DWG NO.	REV
A1	0U5R6	D00000000792595	A

SCALE 1:2 | DO NOT SCALE DRAWING | SHEET 1 OF 1

Created: 09:11:19 on 17-03-09 (D-M-Y) By: orlov State: 1-INITIAL

NOTES (UNLESS OTHERWISE SPECIFIED):

1. TRANSITION FROM R122.0 TO 123.0 MUST ACURE BETWEEN ANGLE GIVEN, RADII & BEND ANGLE TO BE DETERMINED BY VENDER.
2. PEMNUT HOLE SIZE TO BE DETERMINED BY VENDORS CHOICE OF PEMNUT STYLE. PEMNUT THREAD SIZE SHALL BE MAINTAINED AS PER ASSEMBLY DRAWING #792835.
3. VENDER SHALL FOLLOW FERMILAB ENGINEERING SPECIFICATION 5500-ES-371041 WHEN COSTING, FABRICATING, PACKING, AND SHIPPING ALL SHIELD PARTS AND SHIELD ASSEMBLIES.

REVISION HISTORY
CAD MAINTAINED. CHANGES SHALL BE INCORPORATED BY THE DESIGN ACTIVITY.

ZONE	REV	DESCRIPTION	DATE	APPROVED
	A	INITIAL RELEASE ER # ILC-000011	06FEB09	

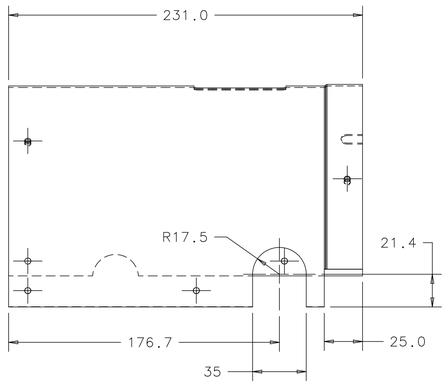

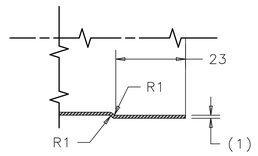

SECTION C-C
SCALE 1:1

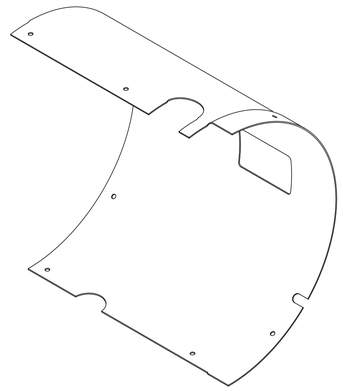

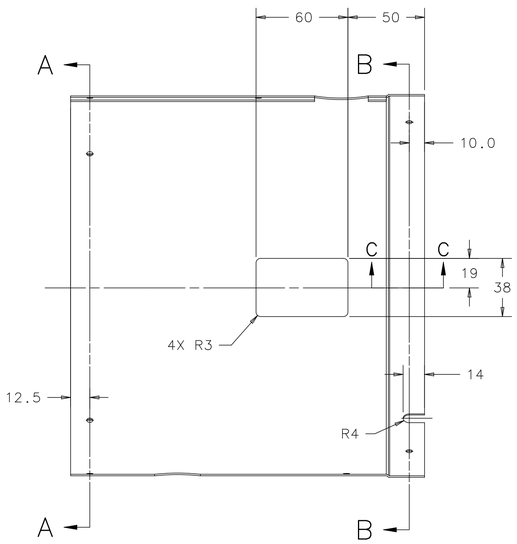

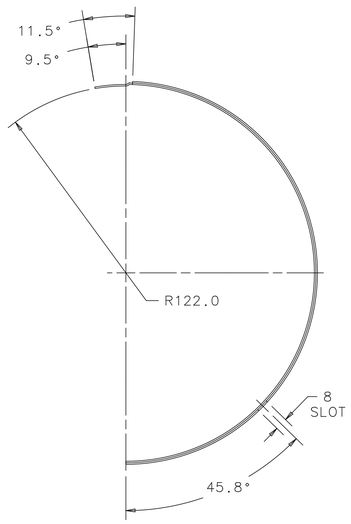

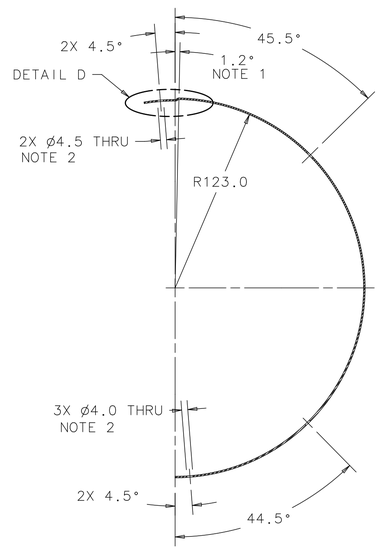

SECTION A-A

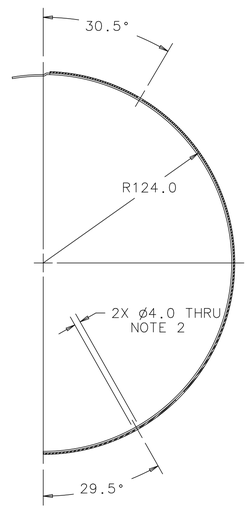

SECTION B-B

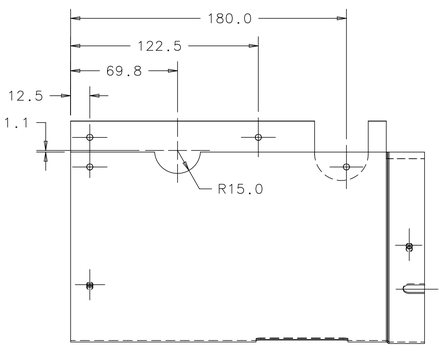

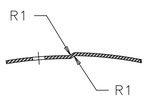

DETAIL D
SCALE 1:1

-	792835
NEXT ASSY	USED ON
APPLICATION	

FINISH: NOTE 3

MATERIAL: CRYOPERM 10, 1 MM THICK

UNLESS OTHERWISE SPECIFIED:
DIMENSIONS ARE IN MILLIMETERS
INTERPRET DIM PER ASME Y14.5M-1994
BREAK ALL SHARP EDGES 0.75 MAX.
ALL MACH. SURFACES 3.2 MAX.

TOLERANCES: X ± 1, X.X ± .5, X.XX ± -, ANGLE ± 1°

THIRD ANGLE PROJECTION

DRAWN BY S. POREMBA	DATE 10JUL07	
CHECKED BY C. GRIMM	DATE 17MAR09	
ENGINEERED BY Y. ORLOV	DATE 17MAR09	
DATABASE DESY EDMS	TEAM/GROUP T4CM DESIGN	
CAD I-DEAS	SOLID MODEL NO. D00000000776212	

FERMI NATIONAL ACCELERATOR LABORATORY
UNITED STATES DEPARTMENT OF ENERGY
P.O. BOX 500, BATAVIA, IL 60510-0500

TITLE
ILC - CRYOMODULE - TYPE IV
HELIUM VESSEL
1-3_MAGNETIC_SHIELD_MAIN_CPLR_2A

SIZE	CAGE CODE	DWG NO.	REV
A1	0U5R6	D00000000792605	A

SCALE 1:2 | DO NOT SCALE DRAWING | SHEET 1 OF 1

Created: 09:11:30 on 17-03-09 (D-M-Y) By: orlov State: 1-INITIAL

REVISION HISTORY CAD MAINTAINED. CHANGES SHALL BE INCORPORATED BY THE DESIGN ACTIVITY.				
ZONE	REV	DESCRIPTION	DATE	APPROVED
	A	INITIAL RELEASE ER # ILC-000011	06FEB09	

NOTES (UNLESS OTHERWISE SPECIFIED):

1. TRANSITION FROM R122.0 TO 123.0 MUST ACURE BETWEEN ANGLE GIVEN, RADII & BEND ANGLE TO BE DETERMINED BY VENDER.
2. PEMNUT HOLE SIZE TO BE DETERMINED BY VENDORS CHOICE OF PEMNUT STYLE. PEMNUT THREAD SIZE SHALL BE MAINTAINED AS PER ASSEMBLY DRAWING #792655.
3. VENDER SHALL FOLLOW FERMILAB ENGINEERING SPECIFICATION 5500-ES-371041 WHEN COSTING, FABRICATING, PACKING, AND SHIPPING ALL SHIELD PARTS AND SHIELD ASSEMBLIES.

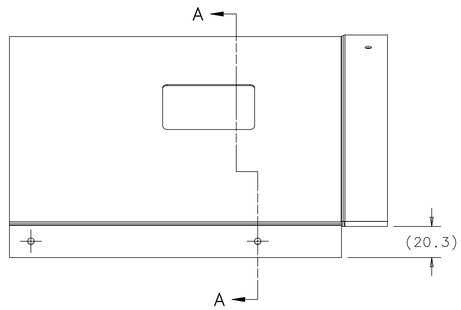

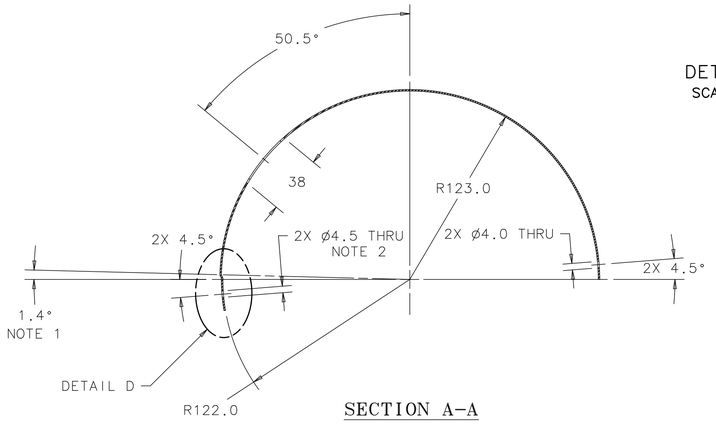

SECTION A-A

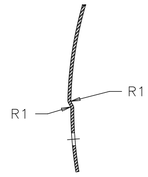

DETAIL D
SCALE 1:1

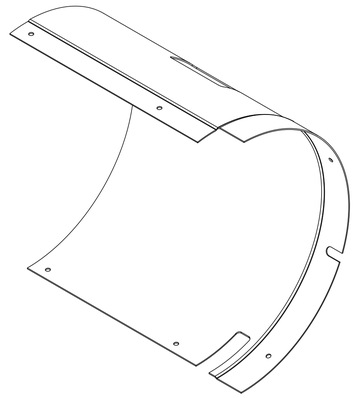

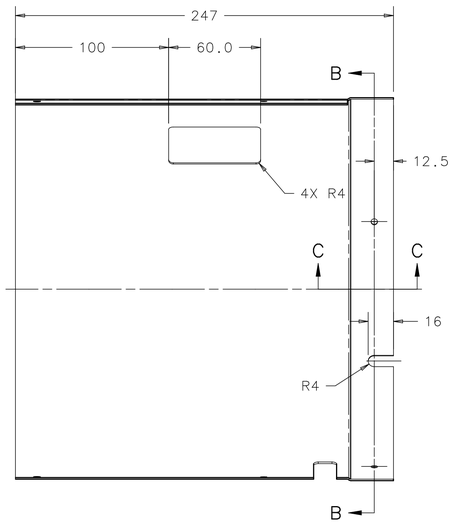

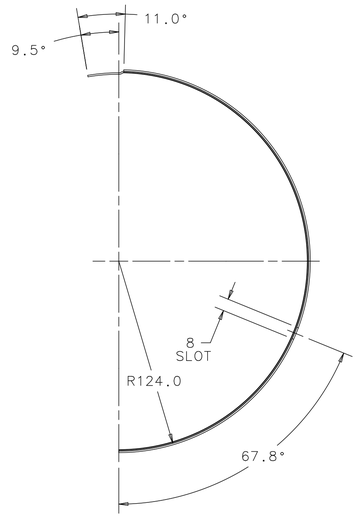

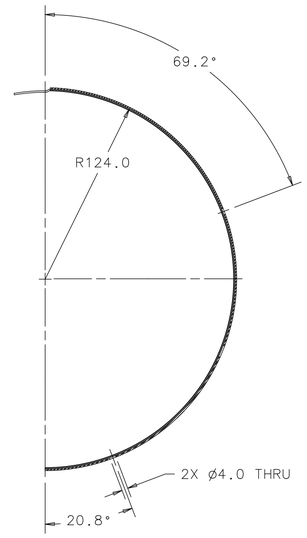

SECTION B-B

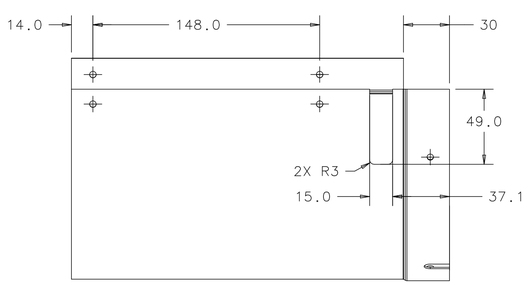

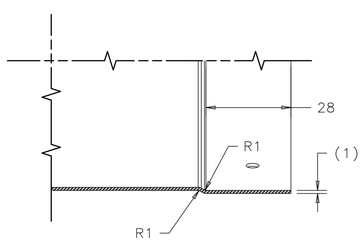

SECTION C-C
SCALE 1:1

	792655
NEXT ASSY	USED ON
APPLICATION	

FINISH NOTE 3	UNLESS OTHERWISE SPECIFIED: DIMENSIONS ARE IN MILLIMETERS INTERPRET DIM PER ASME Y14.5M-1994 BREAK ALL SHARP EDGES 0.75 MAX. ALL MACH. SURFACES 3.2 MAX.	DRAWN BY W. SHARP	DATE 09JUL07
		CHECKED BY C. GRIMM	DATE 17MAR09
		ENGINEERED BY Y. ORLOV	DATE 17MAR09
MATERIAL CRYOPERM 10, 1 MM THICK	TOLERANCES X ± 1 X.X ± 0.5 X.XX ± - ANGLE ± 1°	DATABASE DESY EDMS	TEAM/GROUP T4CM DESIGN
	THIRD ANGLE PROJECTION	CAD I-DEAS	SOLID MODEL NO. D00000000776222

FERMI NATIONAL ACCELERATOR LABORATORY
UNITED STATES DEPARTMENT OF ENERGY
P.O. BOX 500, BATAVIA, IL 60510-0500

TITLE
ILC - CRYOMODULE TYPE IV
HELIUM VESSEL
1-3GHZ_MAGNETIC_SHIELD_UPSTRM_1B

SIZE	CAGE CODE	DWG NO.	REV
A1	0U5R6	D00000000792615	A

SCALE 1:2 | DO NOT SCALE DRAWING | SHEET 1 OF 1

Created: 09:10:32 on 17-03-09 (D-M-Y) By: orlov State: 1-INITIAL

NOTES (UNLESS OTHERWISE SPECIFIED):

1. TRANSITION FROM R122.0 TO 123.0 MUST ACURE BETWEEN ANGLE GIVEN, RADII & BEND ANGLE TO BE DETERMINED BY VENDER.
2. PEMNUT HOLE SIZE TO BE DETERMINED BY VENDORS CHOICE OF PEMNUT STYLE. PEMNUT THREAD SIZE SHALL BE MAINTAINED AS PER ASSEMBLY DRAWING #792655.
3. VENDER SHALL FOLLOW FERMILAB ENGINEERING SPECIFICATION 5500-ES-371041 WHEN COSTING, FABRICATING, PACKING, AND SHIPPING ALL SHIELD PARTS AND SHIELD ASSEMBLIES.

REVISION HISTORY
CAD MAINTAINED. CHANGES SHALL BE INCORPORATED BY THE DESIGN ACTIVITY.

ZONE	REV	DESCRIPTION	DATE	APPROVED
	A	INITIAL RELEASE ER # ILC-000011	06FEB09	

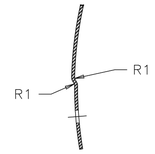

DETAIL D
SCALE 1:1

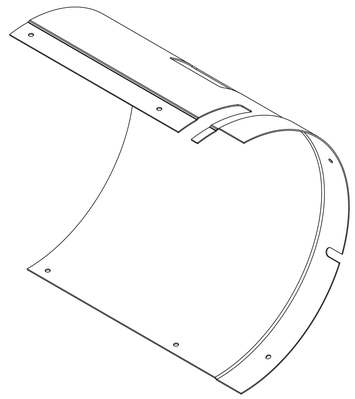

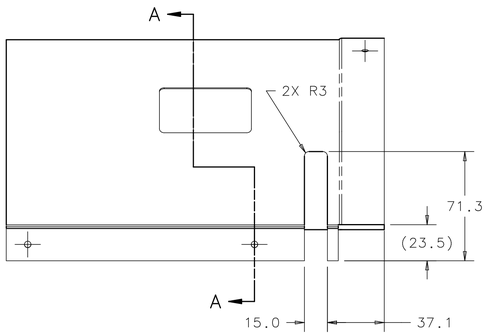

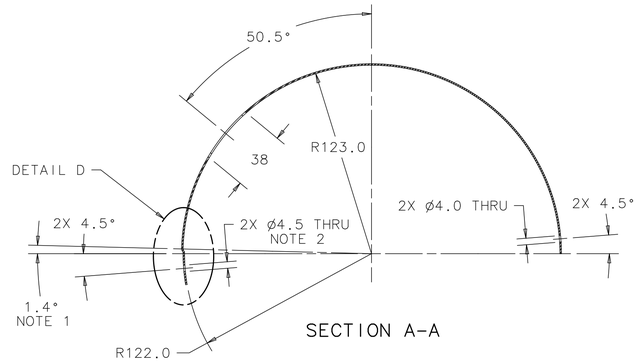

SECTION A-A

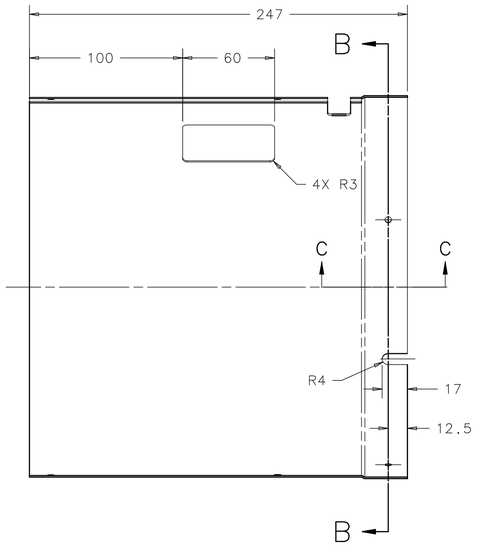

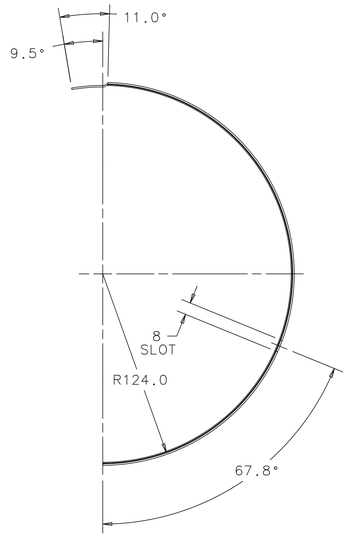

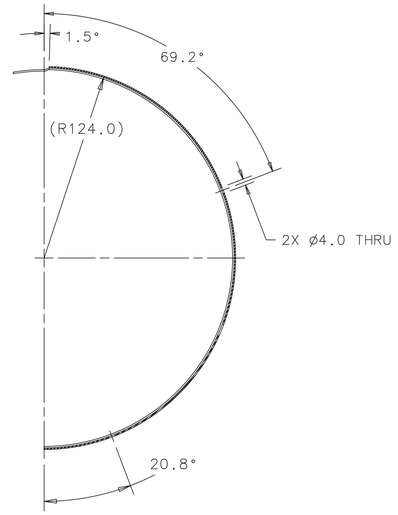

SECTION B-B

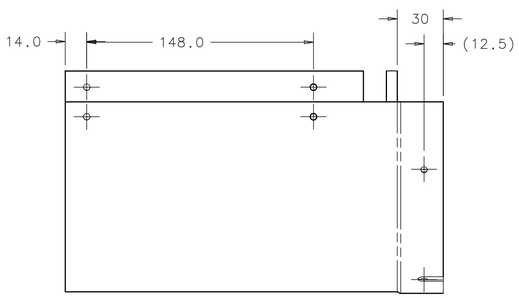

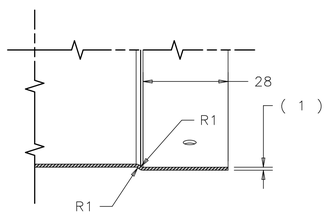

SECTION C-C
SCALE 1:1

	792655
NEXT ASSY	USED ON
APPLICATION	

FINISH: NOTE 3

MATERIAL: CRYOPERM 10, 1 MM THICK

UNLESS OTHERWISE SPECIFIED:
DIMENSIONS ARE IN MILLIMETERS
INTERPRET DIM PER ASME Y14.5M-1994
BREAK ALL SHARP EDGES 0.75 MAX.
ALL MACH. SURFACES 3.2 MAX.

TOLERANCES: X ± 1, X.X ± 0.5, X.XX ± ., ANGLE ± 1°

THIRD ANGLE PROJECTION

DRAWN BY W. SHARP	DATE 10JUL07	
CHECKED BY C. GRIMM	DATE 17MAR09	
ENGINEERED BY Y. ORLOV	DATE 17MAR09	
DATABASE DESY EDMS	TEAM/GROUP T4CM DESIGN	
CAD I-DEAS	SOLID MODEL NO. D00000000776232	

FERMI NATIONAL ACCELERATOR LABORATORY
UNITED STATES DEPARTMENT OF ENERGY
P.O. BOX 500, BATAVIA, IL 60510-0500

TITLE
ILC - CRYOMODULE - TYPE IV
HELIUM VESSEL
1-3GHZ_MAGNETIC_SHIELD_UPSTRM_1A

SIZE	CAGE CODE	DWG NO.	REV
A1	0U5R6	D00000000792625	A

SCALE 1:2 | DO NOT SCALE DRAWING | SHEET 1 OF 1

Created: 09:10:21 on 17-03-09 (D-M-Y) By: orlov State: 1-INITIAL

REVISION HISTORY CAD MAINTAINED. CHANGES SHALL BE INCORPORATED BY THE DESIGN ACTIVITY.				
ZONE	REV	DESCRIPTION	DATE	APPROVED
	A	INITIAL RELEASE ER # ILC-000011	06FEB09	

NOTES (UNLESS OTHERWISE SPECIFIED):

1. VENDER SHALL FOLLOW FERMILAB ENGINEERING SPECIFICATION 5500-ES-371041 WHEN COSTING, FABRICATING, PACKING, AND SHIPPING ALL SHIELD PARTS AND SHIELD ASSEMBLIES.

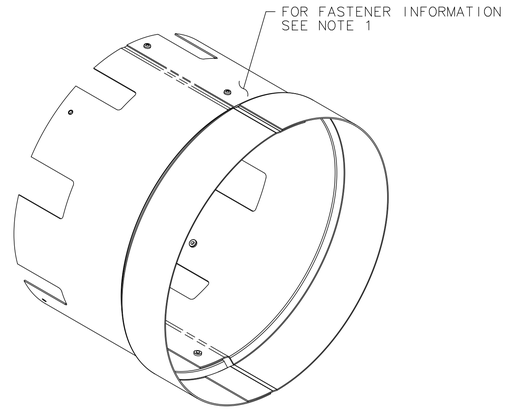

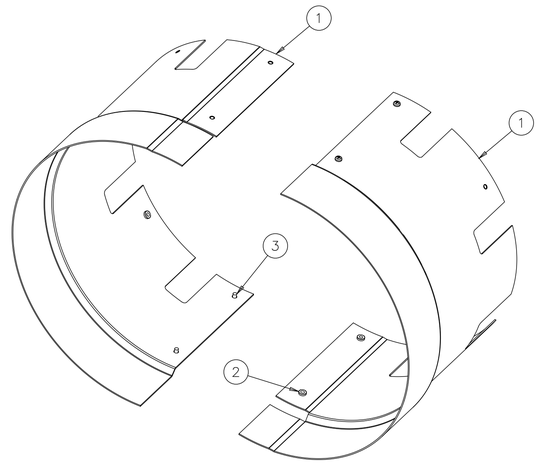

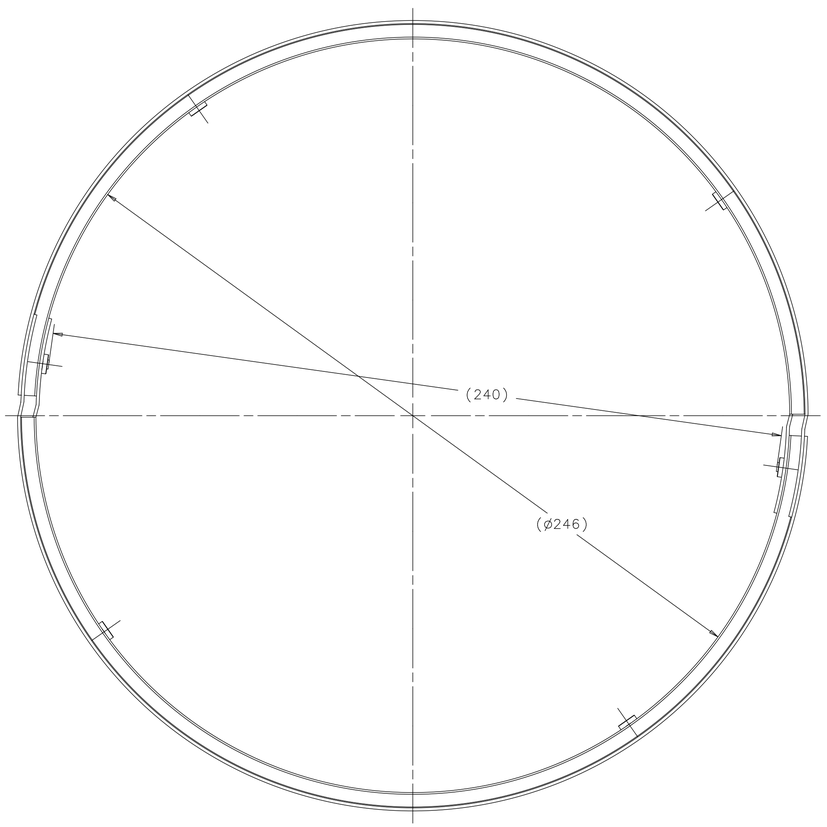

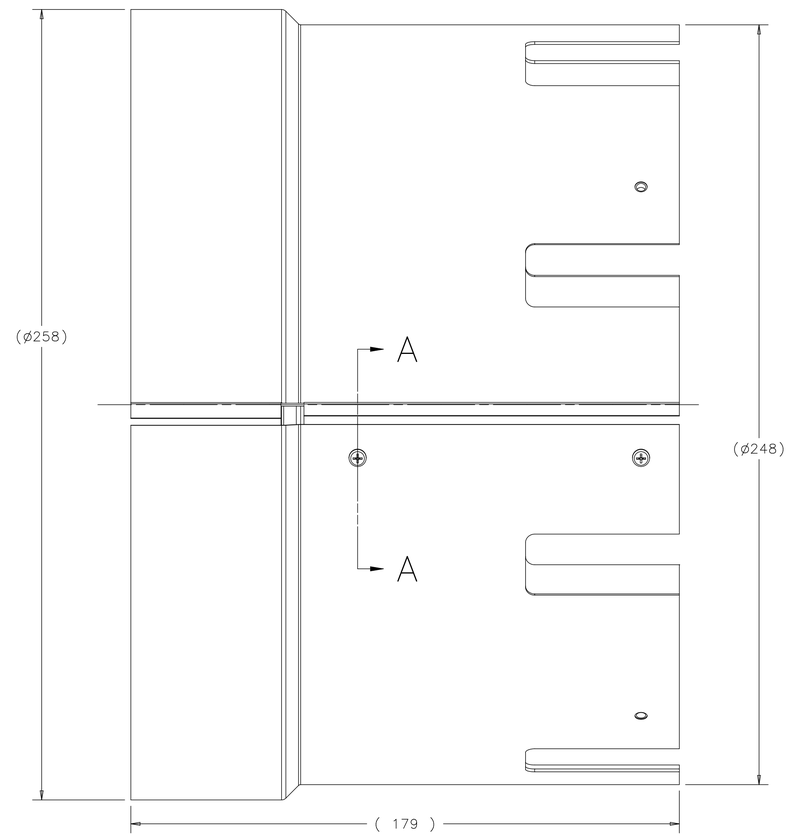

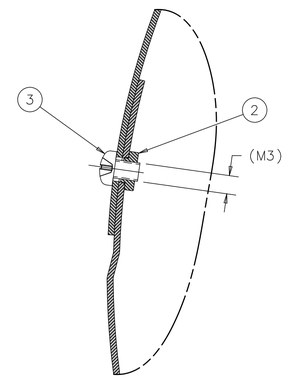

SECTION A-A
SCALE 2:1

ITEM	P.I.N.	DESCRIPTION	QTY
3	COM'L	PAN HEAD MACHINE SCREW M3, 4MM-LG 316 SS McMASTER-CARR #90116A147	4
2	COM'L	CL INCH CAPTIVE NUT M3 18-8 SS, McMASTER-CARR # 97648A410	8
1	792535	1.3 GHZ MAGNETIC SHIELD BT1	2

PARTS LIST

NEXT ASSY	USED ON
-	867255

APPLICATION

FINISH: NOTE 1

MATERIAL: SEE PARTS LIST

UNLESS OTHERWISE SPECIFIED:
DIMENSIONS ARE IN MILLIMETERS
INTERPRET DIM PER ASME Y14.5M-1994
BREAK ALL SHARP EDGES 0.75 MAX.
ALL MACH. SURFACES 3.2 MAX.

TOLERANCES: X ± - ; X.X ± - ; X.XX ± - ; ANGLE ± -

THIRD ANGLE PROJECTION

DRAWN BY: W. SHARP	DATE: 10JUL07	
CHECKED BY: C. GRIMM	DATE: 17MAR09	
ENGINEERED BY: Y. ORLOV	DATE: 17MAR09	
DATABASE: DESY EDMS	TEAM/GROUP: T4CM DESIGN	
CAD: I-DEAS	SOLID MODEL NO.: D00000000613463	

FERMI NATIONAL ACCELERATOR LABORATORY
UNITED STATES DEPARTMENT OF ENERGY
P.O. BOX 500, BATAVIA, IL 60510-0500

TITLE
ILC - CRYOMODULE - TYPE IV HELIUM VESSEL 1-3GHZ_MAGNETIC_SHIELD_BT1_ASSY

SIZE	CAGE CODE	DWG NO.	REV
A1	0U5R6	D00000000792635	A

SCALE 1:1 | DO NOT SCALE DRAWING | SHEET 1 OF 1

Created: 09:11:42 on 17-03-09 (D-M-Y) By: orlov State: 1-INITIAL

NOTES (UNLESS OTHERWISE SPECIFIED):

1. VENDER SHALL FOLLOW FERMILAB ENGINEERING SPECIFICATION 5500-ES-371041 WHEN COSTING, FABRICATING, PACKING, AND SHIPPING ALL SHIELD PARTS AND SHIELD ASSEMBLIES.

REVISION HISTORY
CAD MAINTAINED. CHANGES SHALL BE INCORPORATED BY THE DESIGN ACTIVITY.

ZONE	REV	DESCRIPTION	DATE	APPROVED
	A	INITIAL RELEASE ER # ILC-000011	06FEB09	

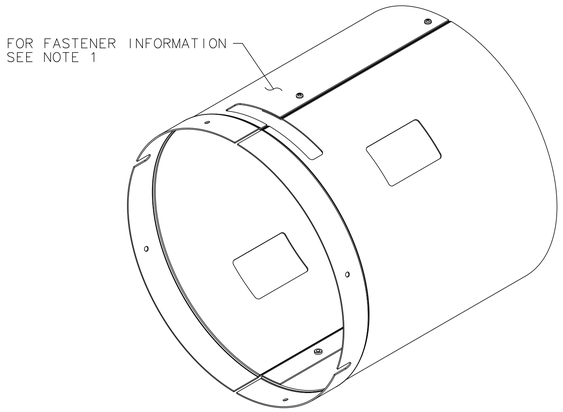

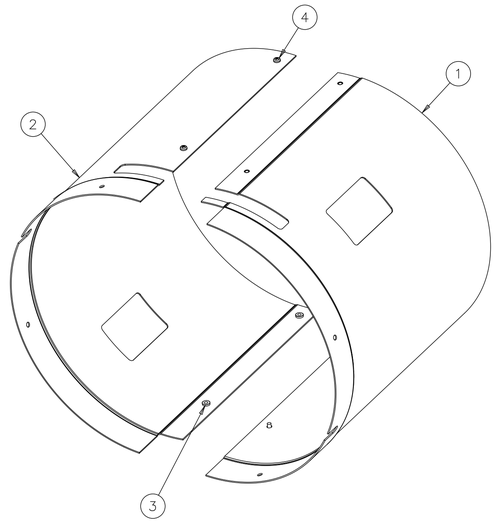

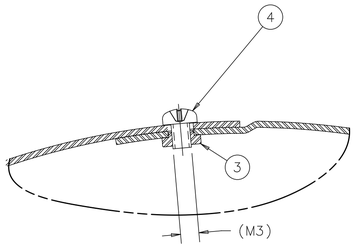

SECTION A-A
SCALE 2:1

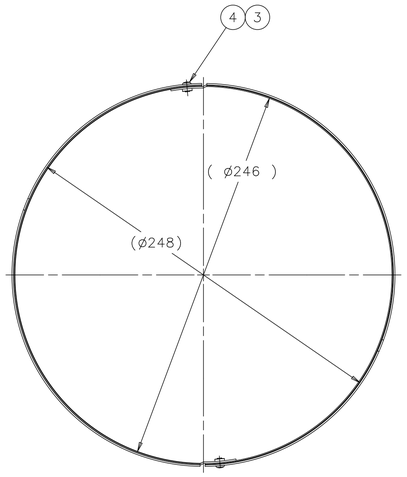

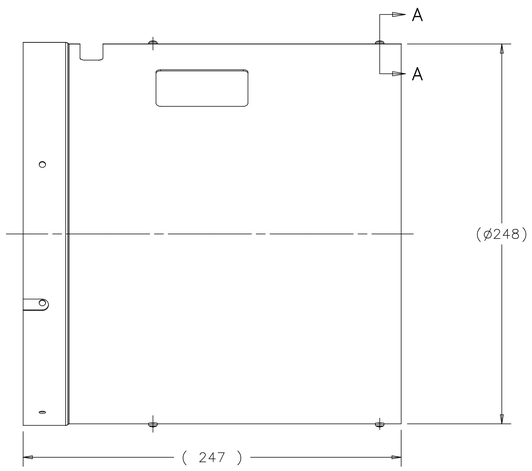

ITEM	P.I.N.	DESCRIPTION	QTY
4	COM'L	PAN HEAD MACHINE SCREW M3, 4MM-LG 316 SS McMASTER-CARR #90116A147	4
3	COM'L	CLINCH CAPTIVE NUT M3 18-8 SS, McMASTER-CARR # 97648A410	8
2	792615	1.3 GHZ MAGNETIC SHIELD UPSTRM 1B	1
1	792625	1.3 GHZ MAGNETIC SHIELD UPSTRM 1A	1

PARTS LIST

-	867255
NEXT ASSY	USED ON
APPLICATION	

FINISH: NOTE 1

MATERIAL: SEE PARTS LIST

UNLESS OTHERWISE SPECIFIED:
DIMENSIONS ARE IN MILLIMETERS
INTERPRET DIM PER ASME Y14.5M-1994
BREAK ALL SHARP EDGES 0.75 MAX.
ALL MACH. SURFACES 3.2 MAX.

TOLERANCES: X ± - ; X.X ± - ; X.XX ± - ; ANGLE ± -

THIRD ANGLE PROJECTION

DRAWN BY W. SHARP	DATE 09JUL07	
CHECKED BY C. GRIMM	DATE 17MAR09	
ENGINEERED BY Y. ORLOV	DATE 17MAR09	
DATABASE DESY EDMS	TEAM/GROUP T4CM DESIGN	
CAD I-DEAS	SOLID MODEL NO. D00000000613513	

FERMI NATIONAL ACCELERATOR LABORATORY
UNITED STATES DEPARTMENT OF ENERGY
P.O. BOX 500, BATAVIA, IL 60510-0500

TITLE
ILC - CRYOMODULE - TYPE IV
HELIUM VESSEL
1-3_MAGNETIC_SHIELD_UPSTRM_ASSY

SIZE	CAGE CODE	DWG NO.	REV
A1	0U5R6	D00000000792655	A

SCALE 1:2 | DO NOT SCALE DRAWING | SHEET 1 OF 1

NOTES (UNLESS OTHERWISE SPECIFIED):

1. VENDER SHALL FOLLOW FERMILAB ENGINEERING SPECIFICATION 5500-ES-371041 WHEN COSTING, FABRICATING, PACKING, AND SHIPPING ALL SHIELD PARTS AND SHIELD ASSEMBLIES.

REVISION HISTORY CAD MAINTAINED. CHANGES SHALL BE INCORPORATED BY THE DESIGN ACTIVITY.				
ZONE	REV	DESCRIPTION	DATE	APPROVED
	A	INITIAL RELEASE ER # ILC-000011	06FEB09	

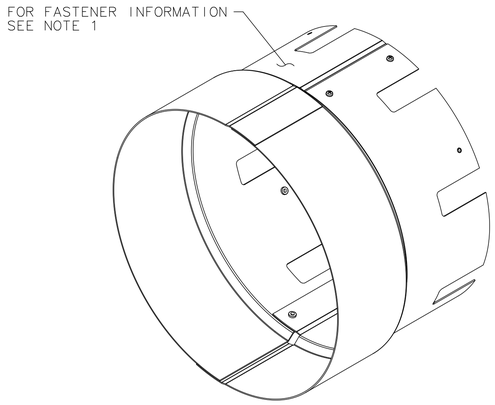

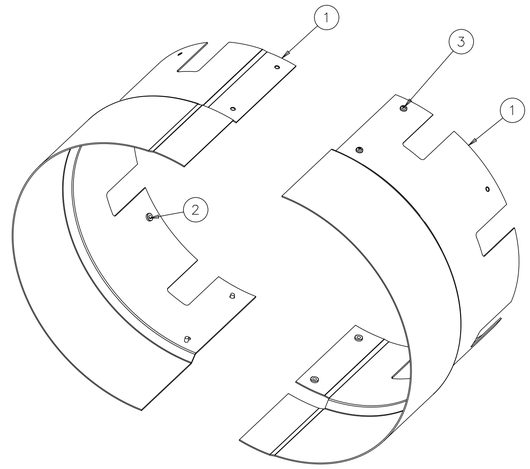

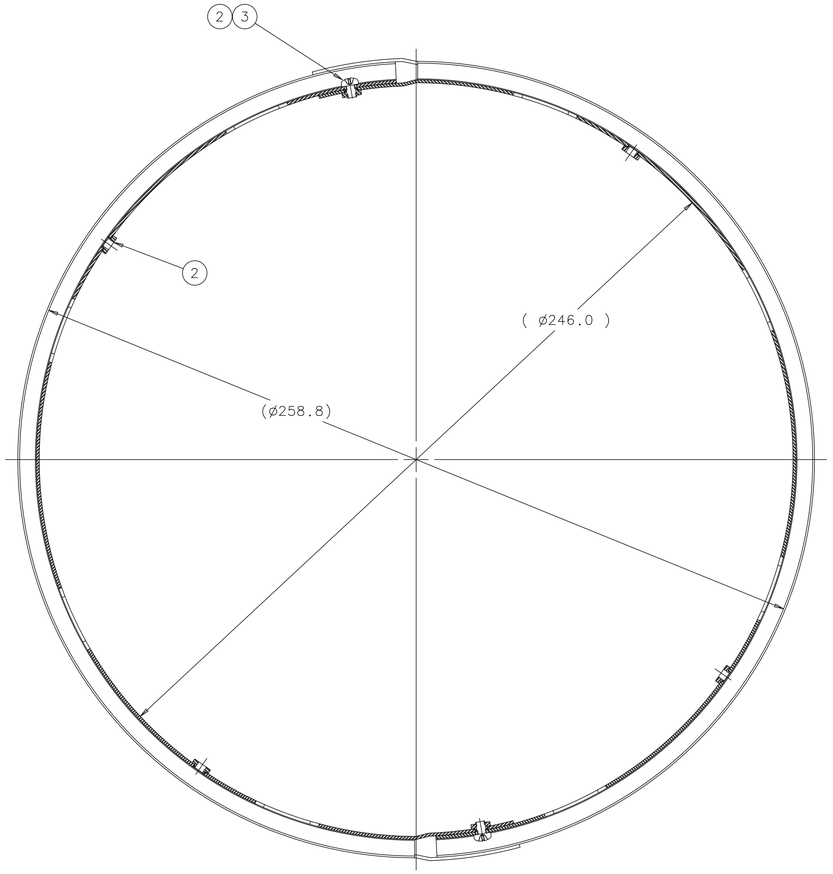

SECTION A-A

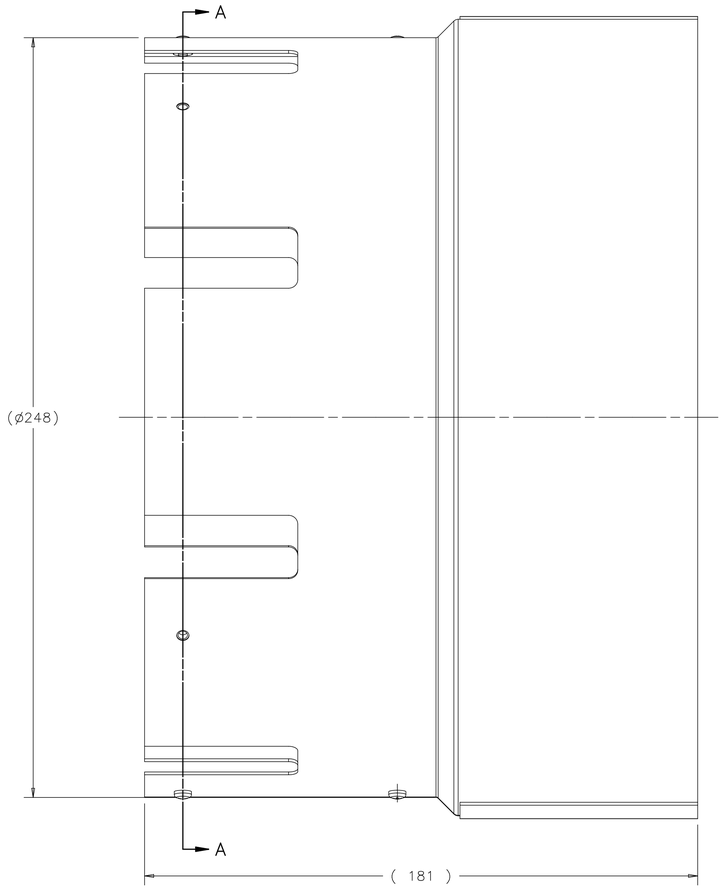

ITEM	P.I.N.	DESCRIPTION	QTY
3	COM'L	PAN HEAD MACHINE SCREW M3, 4MM-LG 316 SS McMASTER-CARR #90116A147	4
2	COM'L	CLINCH CAPTIVE NUT M3 18-8 SS, McMASTER-CARR # 97648A410	8
1	792545	1.3GHZ MAGNETIC SHIELD BT2	2

PARTS LIST

-	867255
NEXT ASSY	USED ON
APPLICATION	

FINISH: NOTE 1

MATERIAL: SEE PARTS LIST

UNLESS OTHERWISE SPECIFIED:
DIMENSIONS ARE IN MILLIMETERS
INTERPRET DIM PER ASME Y14.5M-1994
BREAK ALL SHARP EDGES .75 MAX.
ALL MACH. SURFACES 3.2 MAX.

TOLERANCES: X ± - ; .X ± - ; .XX ± - ; ANGLE ± -

THIRD ANGLE PROJECTION

DRAWN BY S. POREMBA	DATE 12JUL07	
CHECKED BY C. GRIMM	DATE 17MAR09	
ENGINEERED BY Y. ORLOV	DATE 17MAR09	
DATABASE DESY EDMS	TEAM/GROUP T4CM DESIGN	
CAD I-DEAS	SOLID MODEL NO. D00000000613473	

FERMI NATIONAL ACCELERATOR LABORATORY
UNITED STATES DEPARTMENT OF ENERGY
P.O. BOX 500, BATAVIA, IL 60510-0500

TITLE: ILC - CRYOMODULE - TYPE IV HELIUM VESSEL 1-3GHZ_MAGNETIC_SHIELD_BT2_ASSY

SIZE	CAGE CODE	DWG NO.	REV
A1	0U5R6	D00000000792815	A

SCALE 1:1 | DO NOT SCALE DRAWING | SHEET 1 OF 1

Created: 09:10:09 on 17-03-09 (D-M-Y) By: orlov State: 1-INITIAL

NOTES (UNLESS UTHERWISE SPECIFIED):

1. VENDER SHALL FOLLOW FERMILAB ENGINEERING SPECIFICATION 5500-ES-371041 WHEN COSTING, FABRICATING, PACKING, AND SHIPPING ALL SHIELD PARTS AND SHIELD ASSEMBLIES.

REVISION HISTORY
CAD MAINTAINED. CHANGES SHALL BE INCORPORATED BY THE DESIGN ACTIVITY.

ZONE	REV	DESCRIPTION	DATE	APPROVED
	A	INITIAL RELEASE ER # ILC-000011	06FEB09	

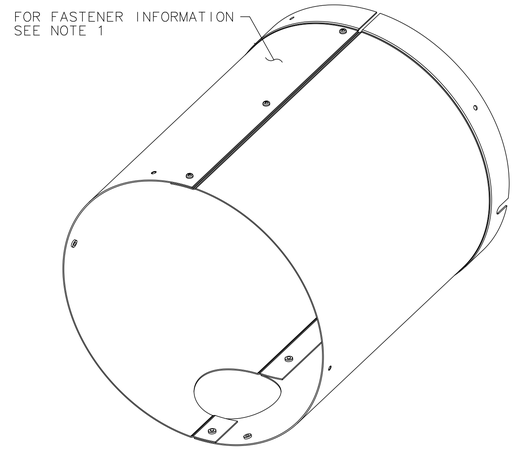

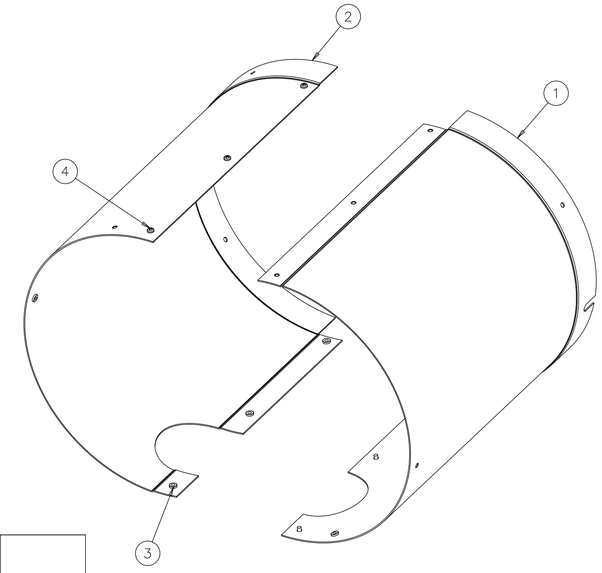

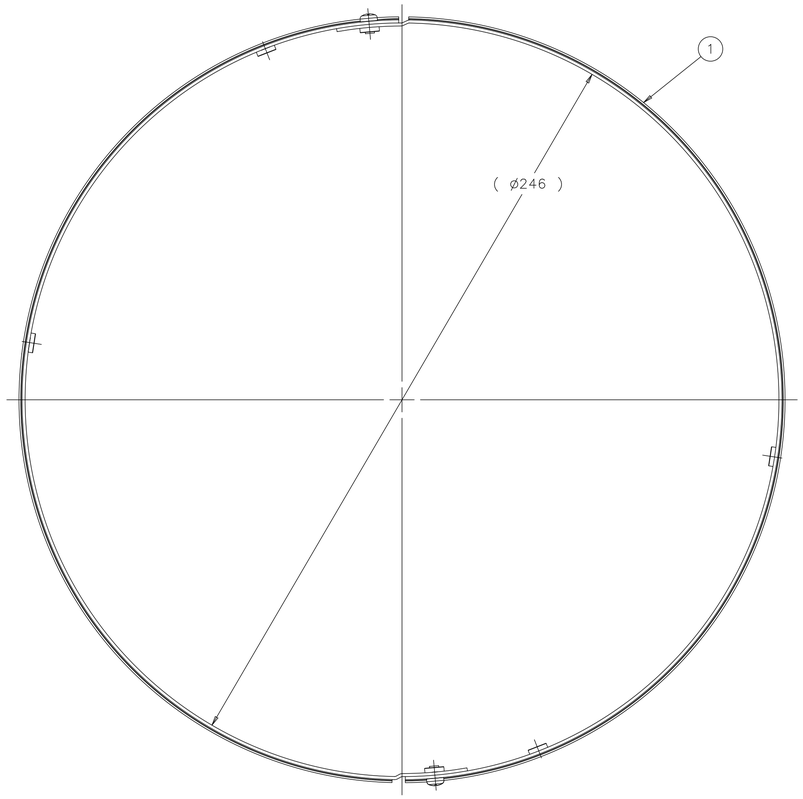

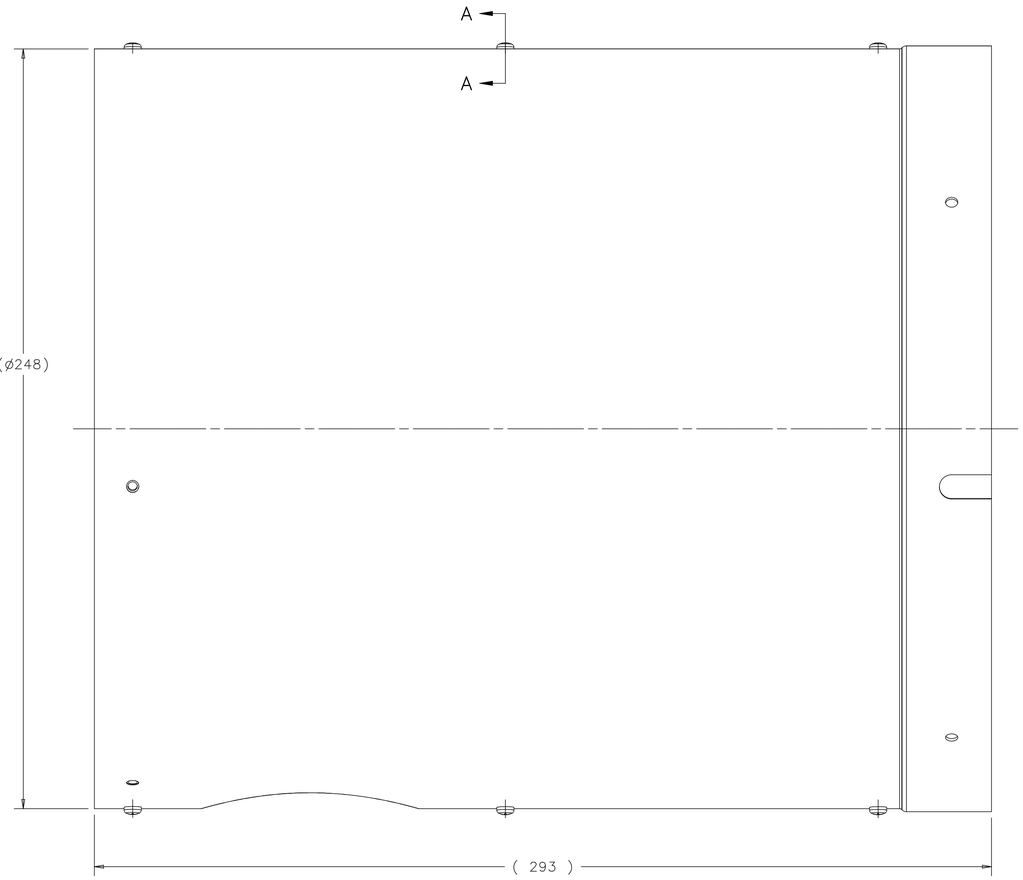

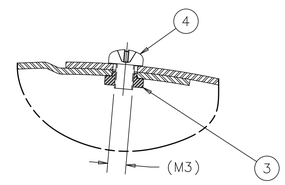

SECTION A-A
SCALE 2:1

ITEM	P.I.N.	DESCRIPTION	QTY
4	COM'L	PAN HEAD MACHINE SCREW M3, 4MM-LG 316 SS McMASTER-CARR #90116A147	6
3	COM'L	CLINCH CAPTIVE NUT M3 18-8 SS, McMASTER-CARR # 97648A410	10
2	792555	1.3 MAGNETIC SHIELD DWNSTRM 2B	1
1	792565	1.3 MAGNETIC SHIELD DWNSTRM 2A	1

PARTS LIST

NEXT ASSY	USED ON
-	867255

APPLICATION

FINISH: NOTE 1

MATERIAL: SEE PARTS LIST

UNLESS OTHERWISE SPECIFIED:
DIMENSIONS ARE IN MILLIMETERS
INTERPRET DIM PER ASME Y14.5M-1994
BREAK ALL SHARP EDGES .75 MAX.
ALL MACH. SURFACES 3.2 MAX.

TOLERANCES: X ± - ; .X ± - ; .XX ± - ; ANGLE ± 1°

THIRD ANGLE PROJECTION

		DATE
DRAWN BY	S. POREMBA	12JUL07
CHECKED BY	C. GRIMM	17MAR09
ENGINEERED BY	Y. ORLOV	17MAR09
DATABASE	DESY EDMS	
TEAM/GROUP	T4CM DESIGN	
CAD	I-DEAS	
SOLID MODEL NO.	D00000000613483	

FERMI NATIONAL ACCELERATOR LABORATORY
UNITED STATES DEPARTMENT OF ENERGY
P.O. BOX 500, BATAVIA, IL 60510-0500

TITLE
ILC - CRYOMODULE - TYPE IV
HELIUM VESSEL
1-3_MAGNETIC_SHIELD_DWNSTRM_ASSY

SIZE	CAGE CODE	DWG NO.	REV
A1	0U5R6	D00000000792825	A

SCALE 1:1 | DO NOT SCALE DRAWING | SHEET 1 OF 1

NOTES (UNLESS OTHERWISE SPECIFIED):

1. VENDER SHALL FOLLOW FERMILAB ENGINEERING SPECIFICATION 5500-ES-371041 WHEN COSTING, FABRICATING, PACKING, AND SHIPPING ALL SHIELD PARTS AND SHIELD ASSEMBLIES.

REVISION HISTORY
CAD MAINTAINED. CHANGES SHALL BE INCORPORATED BY THE DESIGN ACTIVITY.

ZONE	REV	DESCRIPTION	DATE	APPROVED
	A	INITIAL RELEASE ER # ILC-000011	06FEB09	

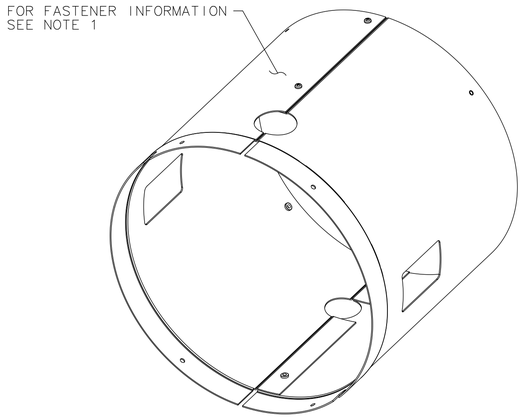

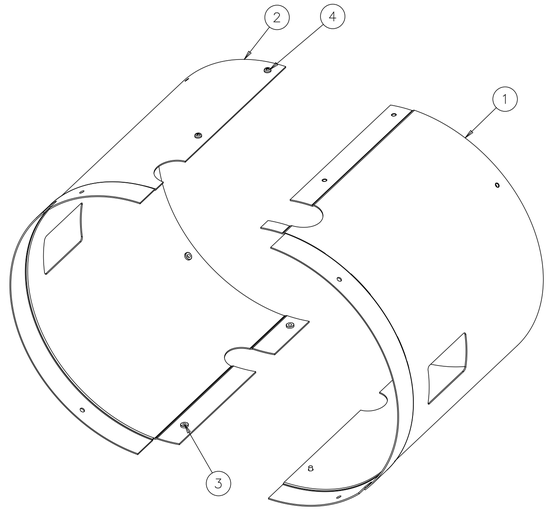

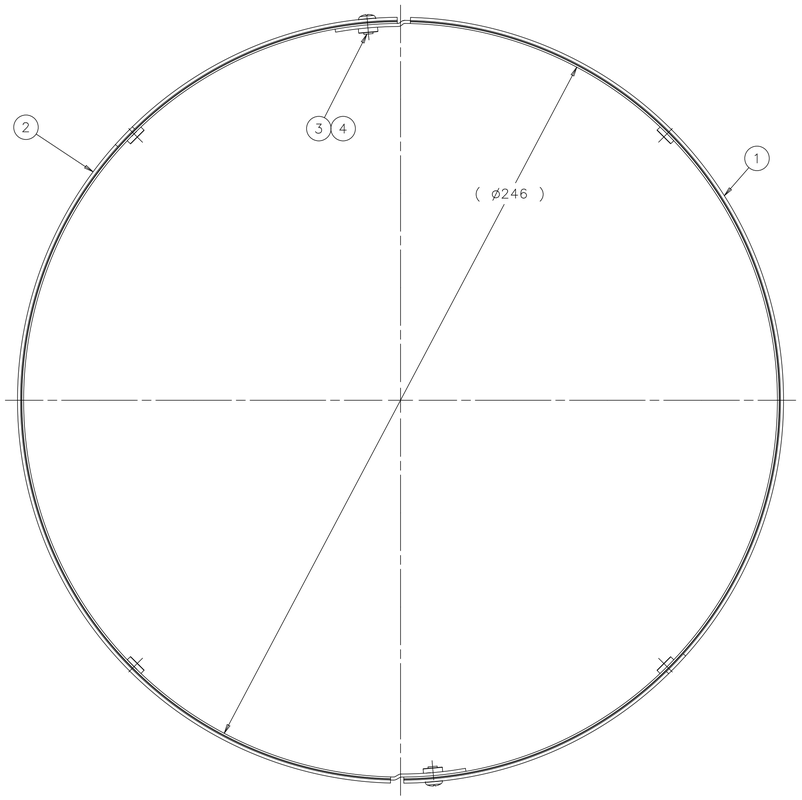

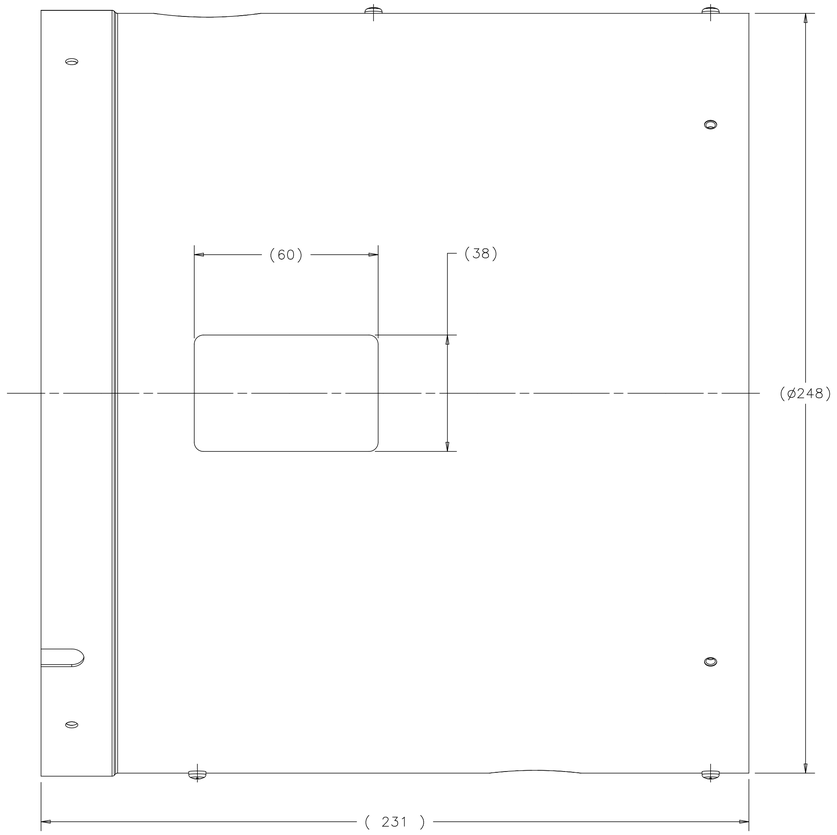

ITEM	P.I.N.	DESCRIPTION	QTY
4	COM'L	PAN HEAD MACHINE SCREW M3, 4MM-LG 316 SS McMASTER-CARR #90116A147	4
3	COM'L	CLINCH CAPTIVE NUT M3 18-8 SS, McMASTER-CARR # 97648A410	8
2	792595	1.3 MAGNETIC SHIELD MAIN CPLR 2B	1
1	792605	1.3 MAGNETIC SHIELD MAIN CPLR 2A	1

PARTS LIST

NEXT ASSY	USED ON
-	867255

APPLICATION

FINISH: NOTE 1

MATERIAL: SEE PARTS LIST

UNLESS OTHERWISE SPECIFIED:
DIMENSIONS ARE IN MILLIMETERS
INTERPRET DIM PER ASME Y14.5M-1994
BREAK ALL SHARP EDGES .75 MAX.
ALL MACH. SURFACES -/ MAX.

TOLERANCES: X ± - ; .X ± - ; .XX ± - ; ANGLE ± -

THIRD ANGLE PROJECTION

DRAWN BY S. POREMBA	DATE 12JUL07	
CHECKED BY C. GRIMM	DATE 17MAR09	
ENGINEERED BY Y. ORLOV	DATE 17MAR09	
DATABASE DESY EDMS	TEAM/GROUP T4CM DESIGN	
CAD I-DEAS	SOLID MODEL NO. D00000000613503	

FERMI NATIONAL ACCELERATOR LABORATORY
UNITED STATES DEPARTMENT OF ENERGY
P.O. BOX 500, BATAVIA, IL 60510-0500

TITLE
ILC - CRYOMODULE - TYPE IV HELIUM VESSEL 1-3_MAGNETIC_SHLD_MAIN_CPLR_ASSY

SIZE	CAGE CODE	DWG NO.	REV
A1	0U5R6	D00000000792835	A

SCALE 1:1 | DO NOT SCALE DRAWING | SHEET 1 OF 1

Created: 09:11:07 on 17-03-09 (D-M-Y) By: orlov State: 1-INITIAL

REVISION HISTORY CAD MAINTAINED. CHANGES SHALL BE INCORPORATED BY THE DESIGN ACTIVITY.				
ZONE	REV	DESCRIPTION	DATE	APPROVED
	A	INITIAL RELEASE ER# ILC-000071		

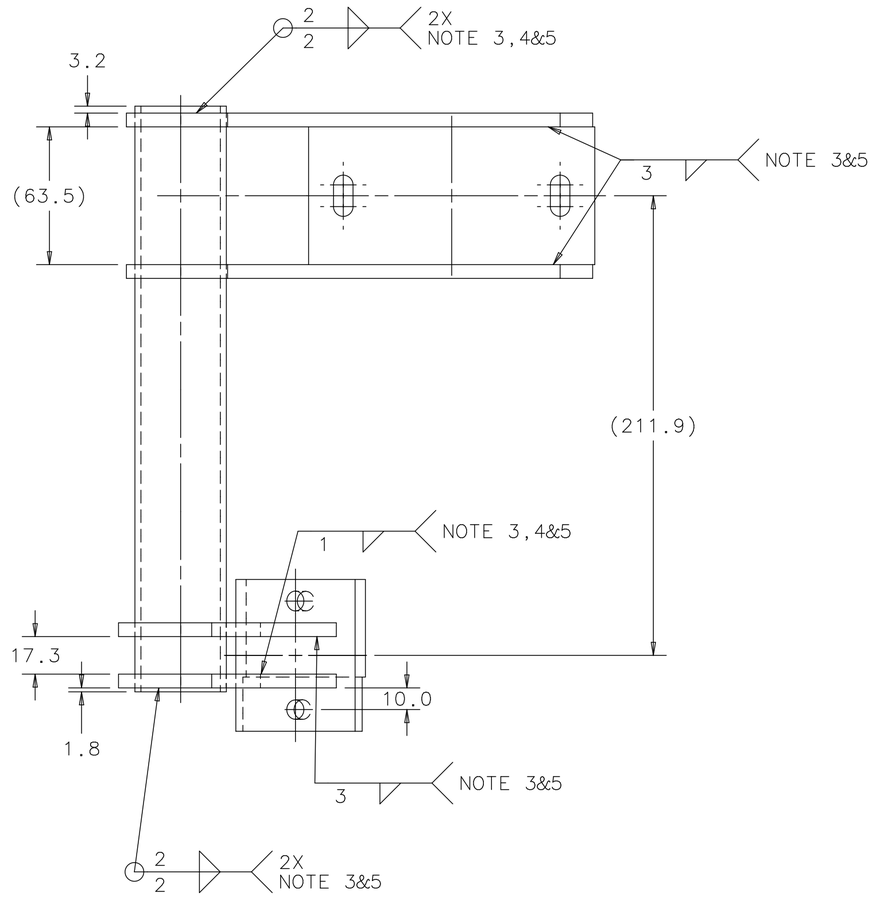

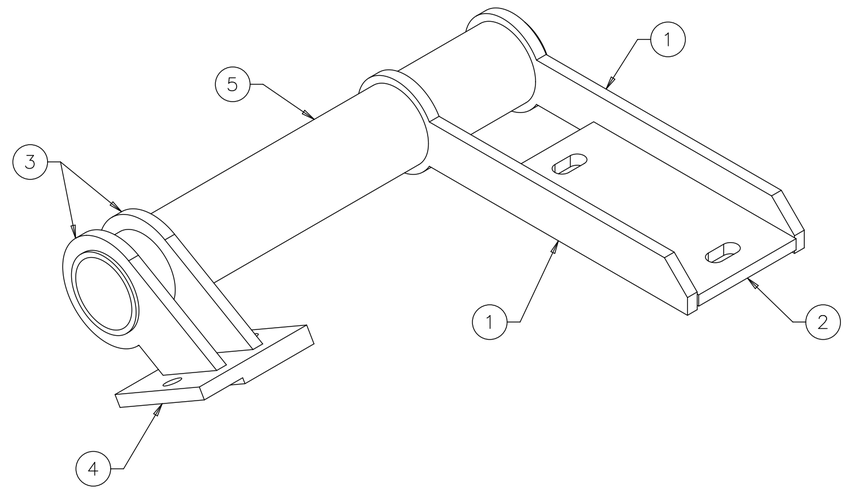

NOTES (UNLESS OTHERWISE SPECIFIED):

1. ASSEMBLY MUST BE FREE OF DIRT, GREASE, OIL AND CHIPS.
2. ASSEMBLY TO BE FREE OF ALL SHARP EDGES, CORNERS, AND BURRS.
3. STEEL WELDS SHALL BE IN ACCORDANCE WITH THE LATEST REVISION OF ANSI/AWS D14.1-97, STRUCTURAL WELDING CODE STEEL.
   - 3-1. THE WELDS SHALL HAVE NO CRACKS, THOROUGH FUSION, AND PROPER PROFILES. THE UNDERRUN, UNDERCUT, AND POROSITY OF THE WELDS MUST CONFORM TO THE CODE. ALL OF THE ABOVE PROPERTIES SHALL BE VISUALLY INSPECTED PER THE ACCEPTANCE CRITERIA IN AWS D1.1,TABLE 6.1. (REVISION 98).
   - 3-2. WELD REPAIRS AND WELDMENT STRAIGHTENING MAY BE PREFORMED PER AWS D1.1: 5.26. ENGINEERING APPROVAL MAY BE REQUIRED PER 5.26.3. (SECTION NUMBERS TAKEN FROM REVISION 98).
4. WELDMENT MUST BE FREE OF DIRT, GREASE, OIL AND CHIPS.
5. WELDS SHALL BE AS SMOOTH AS POSSIBLE. NO SHARP EDGES.

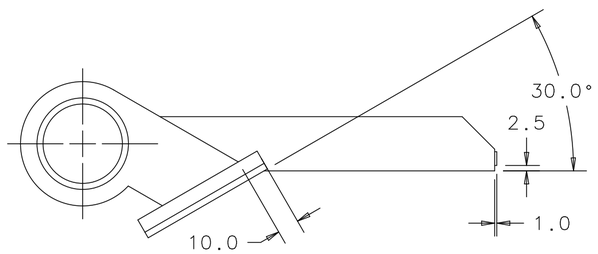

ITEM	P.I.N.	DESCRIPTION	QTY
5	COML	1-1/4" SCHED 10 316L S.S. PIPE; 275 LONG	1
4	880245	BLOCK	1
3	880225	RACK	2
2	880275	CONNECTIONPLATE2	1
1	880265	CONNECTION	2

PARTS LIST

-	880215
NEXT ASSY	USED ON
APPLICATION	

FINISH N/A	UNLESS OTHERWISE SPECIFIED: DIMENSIONS ARE IN MILLIMETERS INTERPRET DIM PER ASME Y14.5M-1994 BREAK ALL SHARP EDGES .75 MAX. ALL MACH. SURFACES 3.2 MAX.	DRAWN BY J.COGHILL	DATE 03FEB10
		CHECKED BY C.GRIMM	DATE 04FEB10
		ENGINEERED BY Y.ORLOV	DATE 04FEB10
MATERIAL SEE PARTS LIST	TOLERANCES X ± - .X ± 0.5 .XX ± - ANGLE ± 0.5°	THIRD ANGLE PROJECTION	DATABASE DESY EDMS / TEAM/GROUP
		CAD I-DEAS	SOLID MODEL NO. D00000000752063

FERMI NATIONAL ACCELERATOR LABORATORY
UNITED STATES DEPARTMENT OF ENERGY
P.O. BOX 500, BATAVIA, IL 60510-0500

TITLE
1.3GHZ UNIFIED CRYOMODULE CAVITY STRING VAT_SUPPORT_CAVITY_SUBASSY

SIZE	CAGE CODE	DWG NO.	REV
A2	0U5R6	D00000000880205	A

SCALE 1:2 | DO NOT SCALE DWG | SHEET 1 OF 1

REVISION HISTORY CAD MAINTAINED. CHANGES SHALL BE INCORPORATED BY THE DESIGN ACTIVITY.				
ZONE	REV	DESCRIPTION	DATE	APPROVED
	A	INITIAL RELEASE ER# ILC-000071		

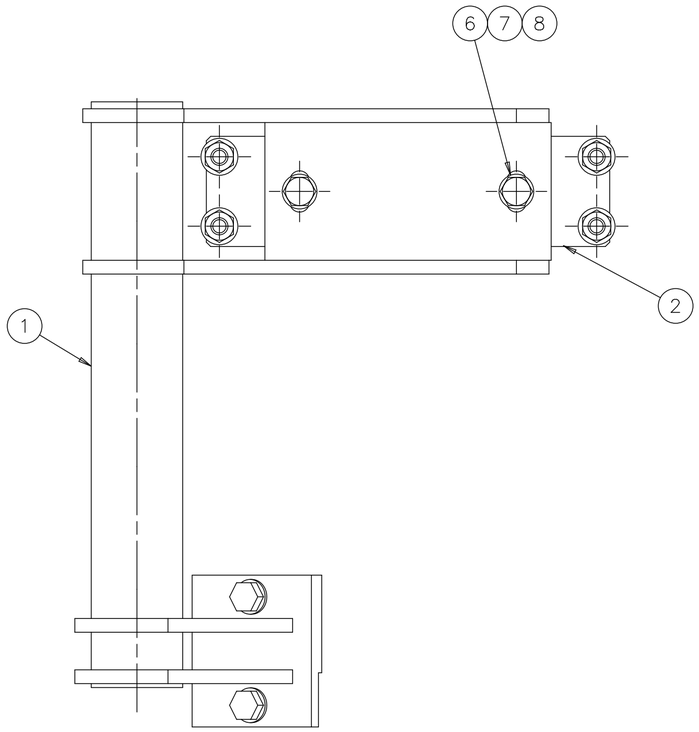

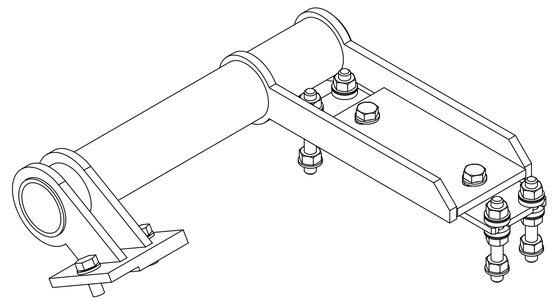

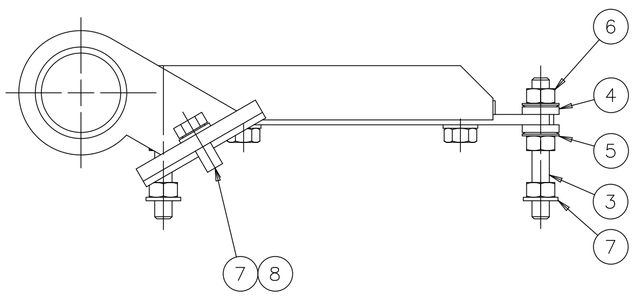

ITEM	P.I.N.	DESCRIPTION	QTY
8	COM'L	HEXSCREW-ISO 4017-M8X20 LG. MCM PART# 93810A467 OR EQUIVALENT	4
7	COM'L	WASHER MCM PART# 90965A190 OR EQUIVALENT	10
6	COML	HEX NUT - M8 SILC. BRZ	16
5	COM'L	CONICAL WASHER M8 MCM PART# 94007A112 OR EQUIVALENT	8
4	COM'L	CONICAL SOCKET MCM PART# 94007A212 OR EQUIVALENT	8
3	COM'L	M8 X 65 LONG THREADED ROD - 316L SS	4
2	880255	CONNECTING PLATE	1
1	880205	VAT SUPPORT CAVITY SUBASSY	1

PARTS LIST

NOTES (UNLESS OTHERWISE SPECIFIED):

1. ASSEMBLY MUST BE FREE OF DIRT, GREASE, OIL AND CHIPS.
2. ASSEMBLY TO BE FREE OF ALL SHARP EDGES, CORNERS, AND BURRS.

NEXT ASSY	USED ON
-	-

APPLICATION

FINISH: N/A

MATERIAL: SEE PARTS LIST

UNLESS OTHERWISE SPECIFIED:
DIMENSIONS ARE IN MILLIMETERS
INTERPRET DIM PER ASME Y14.5M-1994
BREAK ALL SHARP EDGES .75 MAX.
ALL MACH. SURFACES 3.2 MAX.

TOLERANCES: X ± - ; .X ± 0.5 ; .XX ± - ; ANGLE ± -

THIRD ANGLE PROJECTION

DRAWN BY J.COGHILL	DATE 03FEB10	
CHECKED BY	DATE	
ENGINEERED BY	DATE	
DATABASE DESY EDMS	TEAM/GROUP T4CM DESIGN	
CAD I-DEAS	SOLID MODEL NO. D00000000752023	

FERMI NATIONAL ACCELERATOR LABORATORY
UNITED STATES DEPARTMENT OF ENERGY
P.O. BOX 500, BATAVIA, IL 60510-0500

TITLE: 1.3GHZ UNIFIED CRYOMODULE CAVITY STRING VAT_SUPPORT_CAVITY_ASSY

SIZE	CAGE CODE	DWG NO.	REV
A2	0U5R6	D00000000880215	A

SCALE 1:2 | DO NOT SCALE DWG | SHEET 1 OF 1

Created: 10:00:44 on 04-02-10 (D-M-Y) By: coghill State: 1-INITIAL

REVISION HISTORY CAD MAINTAINED. CHANGES SHALL BE INCORPORATED BY THE DESIGN ACTIVITY.				
ZONE	REV	DESCRIPTION	DATE	APPROVED
	A	INITIAL RELEASE ER# ILC-000071		

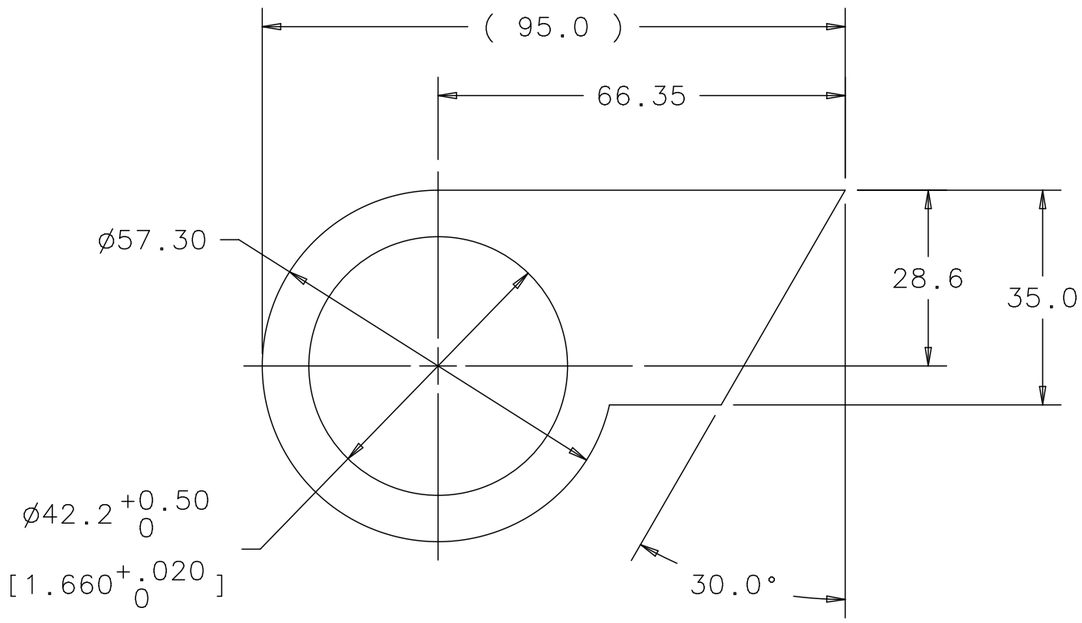

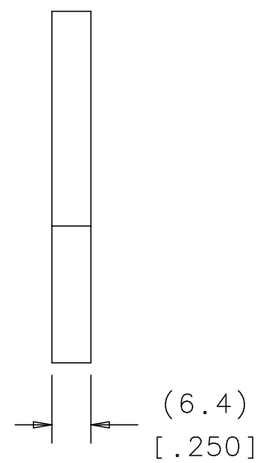

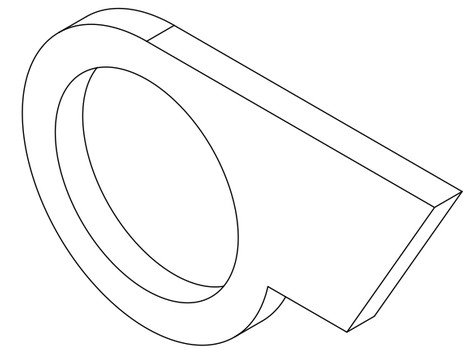

NOTES (UNLESS OTHERWISE SPECIFIED):

1. PART MUST BE FREE OF DIRT, GREASE, OIL AND CHIPS.
2. PART TO BE FREE OF ALL SHARP EDGES, CORNERS, AND BURRS.
3. ALL DIMENSIONS ARE IN MILLIMETERS; DIMENSIONS IN [.XX] ARE IN INCHES.

880215	880205
NEXT ASSY	USED ON
APPLICATION	

FINISH N/A	UNLESS OTHERWISE SPECIFIED: DIMENSIONS ARE IN MILLIMETERS INTERPRET DIM PER ASME Y14.5M-1994 BREAK ALL SHARP EDGES .75 MAX. ALL MACH. SURFACES 3.2 MAX.	DRAWN BY J.COGHILL	DATE 03FEB10
		CHECKED BY C.GRIMM	DATE 04FEB10
		ENGINEERED BY Y.ORLOV	DATE 04FEB10
MATERIAL 316L STAINLESS STEEL PLATE 1/4"	TOLERANCES X ± - .X ± 0.5 .XX ± - ANGLE ± 0.5°	THIRD ANGLE PROJECTION	
		DATABASE DESY EDMS	TEAM/GROUP
		CAD I-DEAS	SOLID MODEL NO. D00000001156152

FERMI NATIONAL ACCELERATOR LABORATORY
UNITED STATES DEPARTMENT OF ENERGY
P.O. BOX 500, BATAVIA, IL 60510-0500

TITLE
1.3GHZ UNIFIED CRYOMODULE CAVITY STRING RACK

SIZE	CAGE CODE	DWG NO.	REV
A3	0U5R6	D00000000880225	A
SCALE 1:1	DO NOT SCALE DWG	SHEET 1 OF 1	

Created: 10:03:10 on 04-02-10 (D-M-Y) By: coghill State: 4-INITIAL

REVISION HISTORY CAD MAINTAINED. CHANGES SHALL BE INCORPORATED BY THE DESIGN ACTIVITY.				
ZONE	REV	DESCRIPTION	DATE	APPROVED
	A	INITIAL RELEASE ER# ILC-000071		

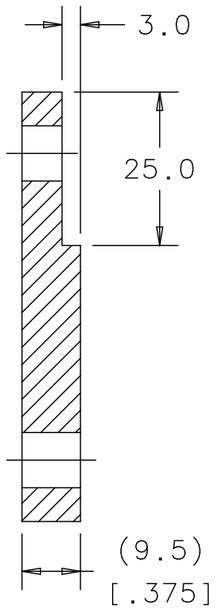

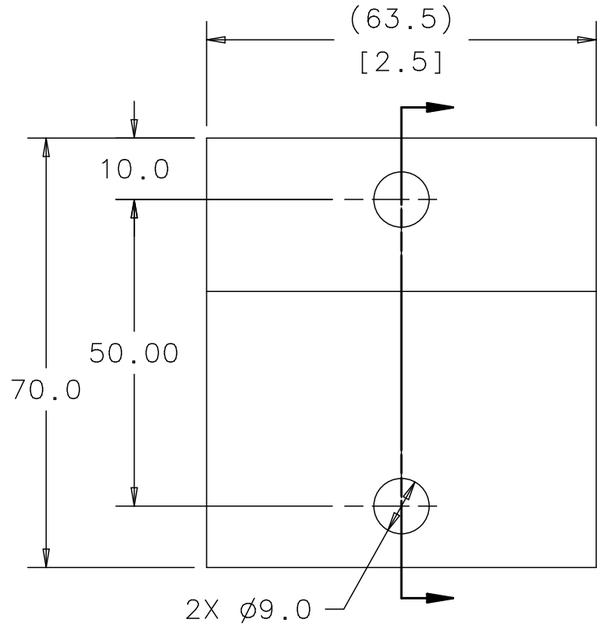

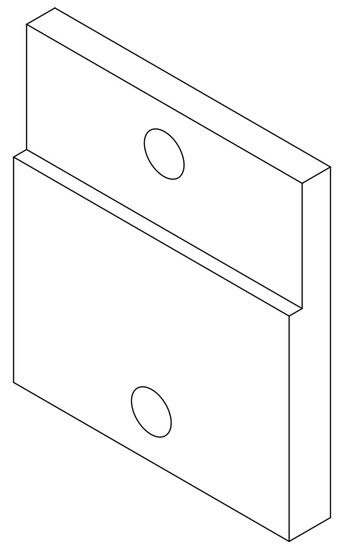

NOTES (UNLESS OTHERWISE SPECIFIED):

1. PART MUST BE FREE OF DIRT, GREASE, OIL AND CHIPS.
2. PART TO BE FREE OF ALL SHARP EDGES, CORNERS, AND BURRS.
3. ALL DIMENSIONS ARE IN MILLIMETERS; DIMENSIONS IN [.XX] ARE IN INCHES.

880215	880205
NEXT ASSY	USED ON
APPLICATION	

FINISH: N/A

MATERIAL: 316L STAINLESS STEEL FLAT 3/8" X 2 1/2"

UNLESS OTHERWISE SPECIFIED:
DIMENSIONS ARE IN MILLIMETERS
INTERPRET DIM PER ASME Y14.5M-1994
BREAK ALL SHARP EDGES .75 MAX.
ALL MACH. SURFACES 3.2 MAX.

TOLERANCES: X ± - ; .X ± 0.5 ; .XX ± 0.25 ; ANGLE ± -

THIRD ANGLE PROJECTION

DRAWN BY J.COGHILL	DATE 03FEB10	
CHECKED BY C.GRIMM	DATE 04FEB10	
ENGINEERED BY Y.ORLOV	DATE 04FEB10	
DATABASE DESY EDMS	TEAM/GROUP T4CM DESIGN	
CAD I-DEAS	SOLID MODEL NO. D00000001156282	

FERMI NATIONAL ACCELERATOR LABORATORY
UNITED STATES DEPARTMENT OF ENERGY
P.O. BOX 500, BATAVIA, IL 60510-0500

TITLE: 1.3GHZ UNIFIED CRYOMODULE CAVITY STRING BLOCK

SIZE	CAGE CODE	DWG NO.	REV
A3	0U5R6	D00000000880245	A
SCALE 1:1	DO NOT SCALE DWG	SHEET 1 OF 1	

Created: 16:04:22 on 04-02-10 (D-M-Y) By: coghill State: 4-INITIAL

REVISION HISTORY CAD MAINTAINED. CHANGES SHALL BE INCORPORATED BY THE DESIGN ACTIVITY.				
ZONE	REV	DESCRIPTION	DATE	APPROVED
	A	INITIAL RELEASE ER# ILC-000071		

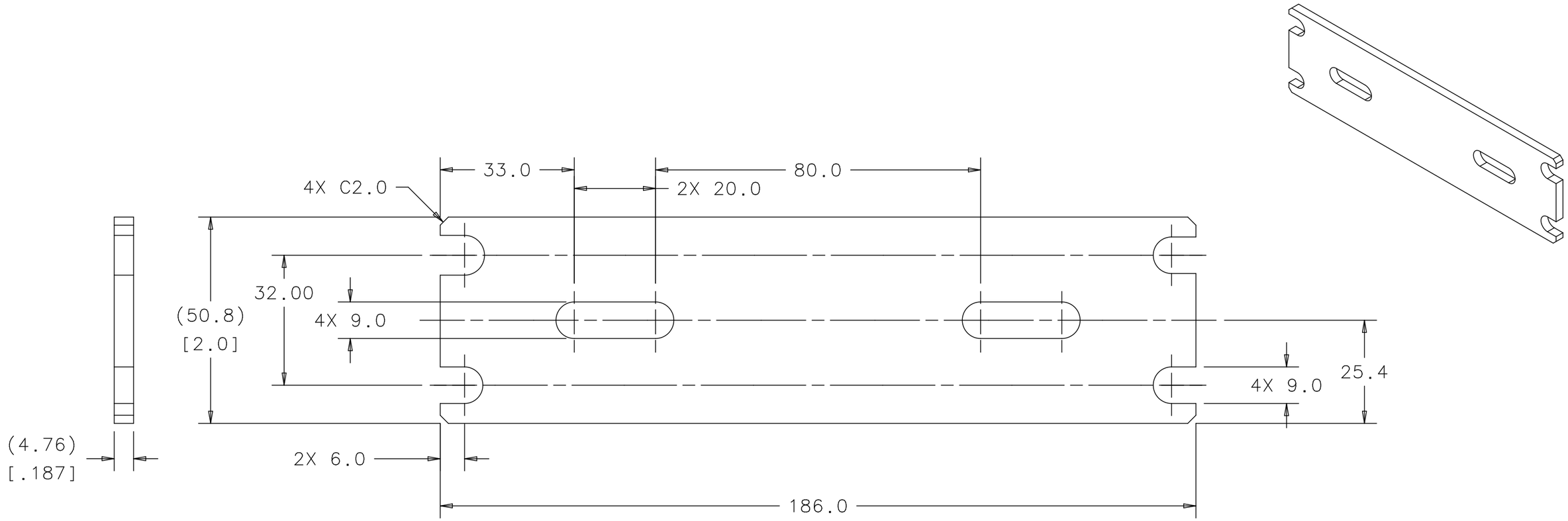

NOTES (UNLESS OTHERWISE SPECIFIED):

1. PART MUST BE FREE OF DIRT, GREASE, OIL AND CHIPS.
2. PART TO BE FREE OF ALL SHARP EDGES, CORNERS, AND BURRS.
3. ALL DIMENSIONS ARE IN MILLIMETERS; DIMENSIONS IN [.XX] ARE IN INCHES.

-	880215
NEXT ASSY	USED ON
APPLICATION	

FINISH N/A	UNLESS OTHERWISE SPECIFIED: DIMENSIONS ARE IN MILLIMETERS INTERPRET DIM PER ASME Y14.5M-1994 BREAK ALL SHARP EDGES .75 MAX. ALL MACH. SURFACES 3.2 MAX.	DRAWN BY J.COGHILL	DATE 03FEB10
		CHECKED BY C.GRIMM	DATE 04FEB10
		ENGINEERED BY Y.ORLOV	DATE 04FEB10
MATERIAL 316L STAINLESS STEEL FLAT 3/16" X 2"	TOLERANCES X ± - .X ± 0.5 .XX ± 0.15 ANGLE ± 1°	THIRD ANGLE PROJECTION	DATABASE DESY EDMS / TEAM/GROUP
		CAD I-DEAS	SOLID MODEL NO. D00000001156272

FERMI NATIONAL ACCELERATOR LABORATORY
UNITED STATES DEPARTMENT OF ENERGY
P.O. BOX 500, BATAVIA, IL 60510-0500

TITLE
1.3GHZ UNIFIED CRYOMODULE
CAVITY STRING
CONNECTING_PLATE

SIZE	CAGE CODE	DWG NO.	REV
A3	0U5R6	D00000000880255	A
SCALE 1:1	DO NOT SCALE DWG	SHEET 1 OF 1	

Created: 10:05:37 on 04-02-10 (D-M-Y) By: coghill State: 4-INITIAL

REVISION HISTORY CAD MAINTAINED. CHANGES SHALL BE INCORPORATED BY THE DESIGN ACTIVITY.				
ZONE	REV	DESCRIPTION	DATE	APPROVED
	A	INITIAL RELEASE ER# ILC-000071		

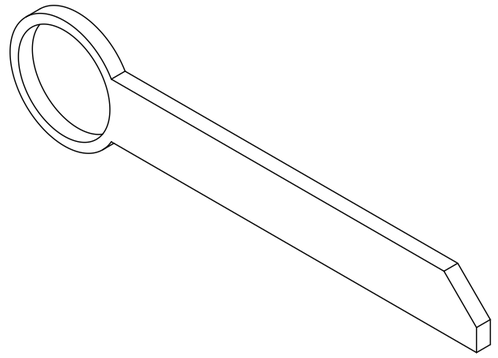

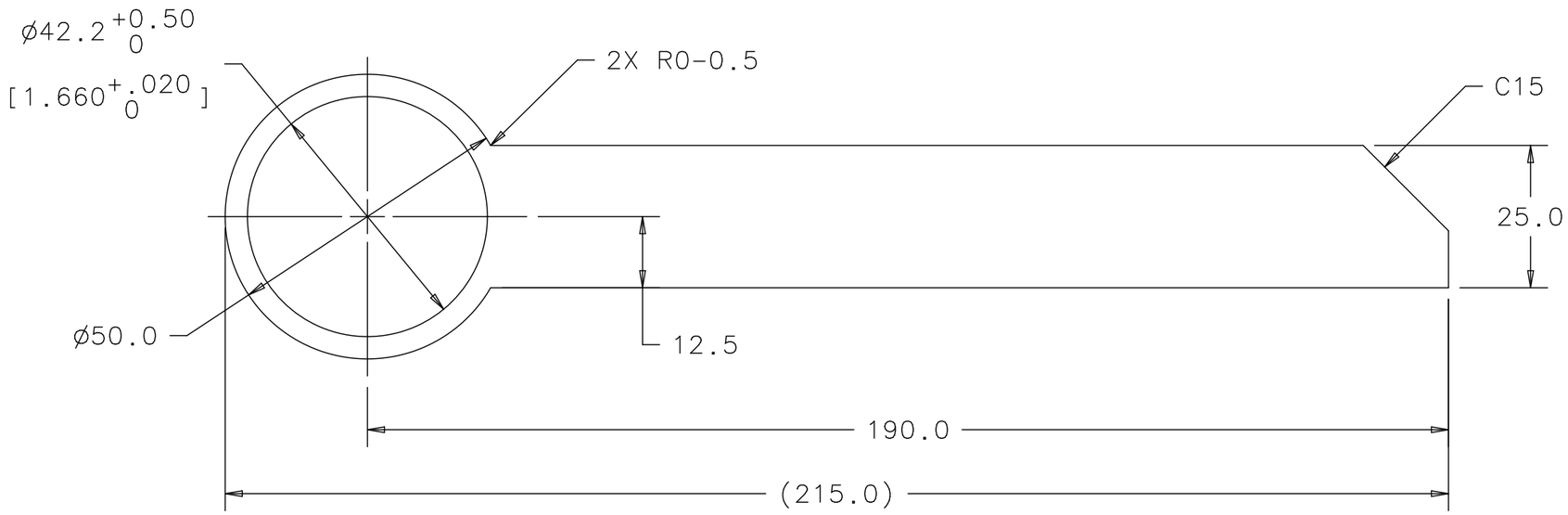

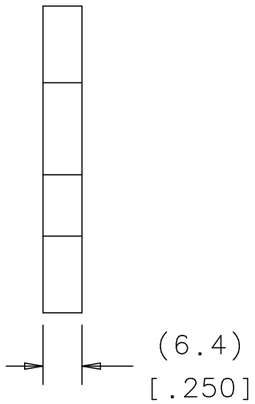

NOTES (UNLESS OTHERWISE SPECIFIED):

1. PART MUST BE FREE OF DIRT, GREASE, OIL AND CHIPS.
2. PART TO BE FREE OF ALL SHARP EDGES, CORNERS, AND BURRS.
3. ALL DIMENSIONS ARE IN MILLIMETERS; DIMENSIONS IN [.XX] ARE IN INCHES.

880215	880205
NEXT ASSY	USED ON
APPLICATION	

FINISH N/A	UNLESS OTHERWISE SPECIFIED: DIMENSIONS ARE IN MILLIMETERS INTERPRET DIM PER ASME Y14.5M-1994 BREAK ALL SHARP EDGES .75 MAX. ALL MACH. SURFACES 3.2 MAX.	DRAWN BY J.COGHILL	DATE 03FEB10
		CHECKED BY C.GRIMM	DATE 04FEB10
		ENGINEERED BY Y.ORLOV	DATE 04FEB10
MATERIAL 316L STAINLESS STEEL PLATE 1/4"	TOLERANCES X ± 1 .X ± 0.5 .XX ± - ANGLE ± 1°	THIRD ANGLE PROJECTION	
		DATABASE DESY EDMS	TEAM/GROUP T4CM DESIGN
		CAD I-DEAS	SOLID MODEL NO. D00000001156172

FERMI NATIONAL ACCELERATOR LABORATORY
UNITED STATES DEPARTMENT OF ENERGY
P.O. BOX 500, BATAVIA, IL 60510-0500

TITLE
1.3GHZ UNIFIED CRYOMODULE CAVITY STRING CONNECTION

SIZE	CAGE CODE	DWG NO.	REV
A3	0U5R6	D00000000880265	A
SCALE 1:1	DO NOT SCALE DWG	SHEET 1 OF 1	

Created: 16:06:50 on 04-02-10 (D-M-Y) By: coghill State: 4-INITIAL

REVISION HISTORY

CAD MAINTAINED. CHANGES SHALL BE INCORPORATED BY THE DESIGN ACTIVITY.

ZONE	REV	DESCRIPTION	DATE	APPROVED
	A	INITIAL RELEASE ER# ILC-000071		

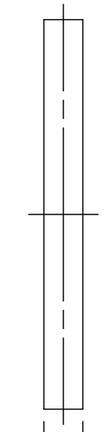

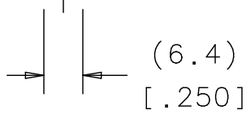

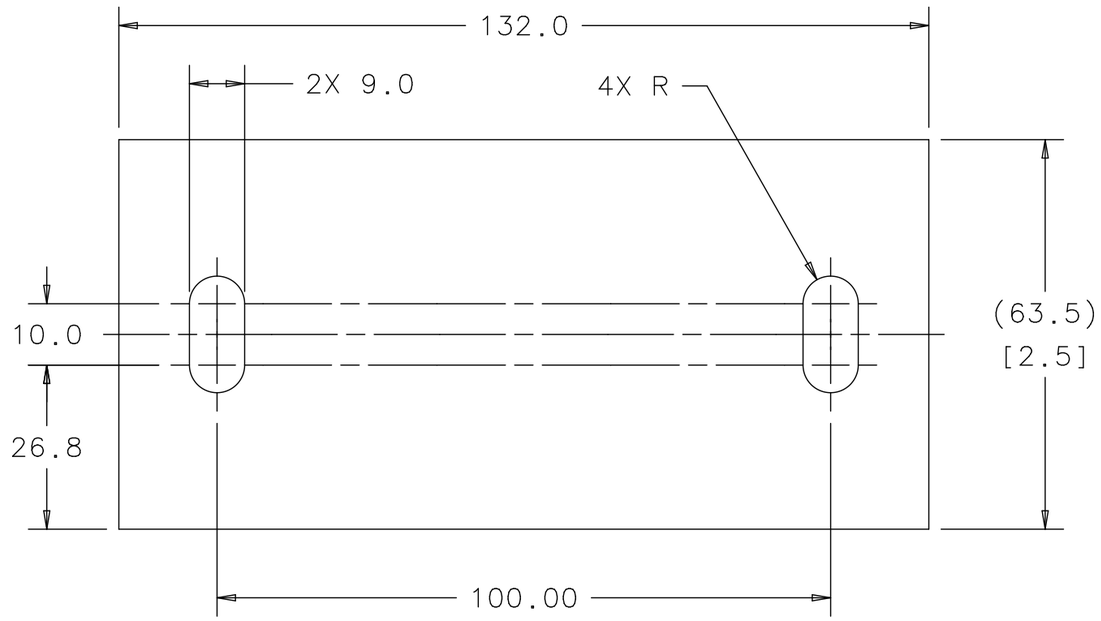

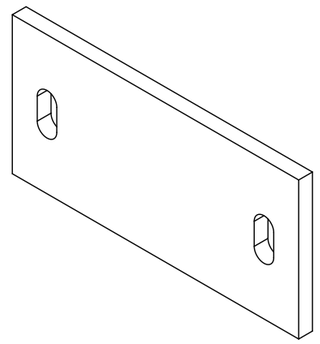

NOTES (UNLESS OTHERWISE SPECIFIED):

1. PART MUST BE FREE OF DIRT, GREASE, OIL AND CHIPS.
2. PART TO BE FREE OF ALL SHARP EDGES, CORNERS, AND BURRS.
3. ALL DIMENSIONS ARE IN MILLIMETERS; DIMENSIONS IN [.XX] ARE IN INCHES.

880215	880205
NEXT ASSY	USED ON
APPLICATION	

FINISH: N/A	UNLESS OTHERWISE SPECIFIED: DIMENSIONS ARE IN MILLIMETERS INTERPRET DIM PER ASME Y14.5M-1994 BREAK ALL SHARP EDGES .75 MAX. ALL MACH. SURFACES 3.2 MAX.	DRAWN BY J.COGHILL	DATE 03FEB10	FERMI NATIONAL ACCELERATOR LABORATORY UNITED STATES DEPARTMENT OF ENERGY P.O. BOX 500, BATAVIA, IL 60510-0500
		CHECKED BY C.GRIMM	DATE 04FEB10	TITLE: 1.3GHZ UNIFIED CRYOMODULE CAVITY STRING CONNECTIONPLATE2
		ENGINEERED BY Y.ORLOV	DATE 04FEB10	
MATERIAL: 316L STAINLESS STEEL FLAT 1/4" X 2 1/2"	TOLERANCES: X ± - .X ± 0.5 .XX ± 0.25 ANGLE ± -	THIRD ANGLE PROJECTION	DATABASE DESY EDMS	TEAM/GROUP T4CM DESIGN
			CAD I-DEAS	SOLID MODEL NO. D00000001156292

SIZE	CAGE CODE	DWG NO.	REV
A3	0U5R6	D00000000880275	A
SCALE 1:1	DO NOT SCALE DWG	SHEET 1 OF 1	

Created: 16:08:18 on 04-02-10 (D-M-Y) By: coghill State: 4-INITIAL

NOTES (UNLESS OTHERWISE SPECIFIED):

1. PART MUST BE FREE OF DIRT, GREASE, OIL AND CHIPS.
2. PART TO BE FREE OF ALL SHARP EDGES, CORNERS, AND BURRS.

REVISION HISTORY

CAD MAINTAINED. CHANGES SHALL BE INCORPORATED BY THE DESIGN ACTIVITY.

ZONE	REV	DESCRIPTION	DATE	APPROVED
	A	INITIAL RELEASE: ER# ILC-000048		
B2 B3	B	ECO# 000085 DIM 20.4 +0.2 WAS 19.4 DIM 2.8 WAS 3.3	01MAR10	Y.ORLOV

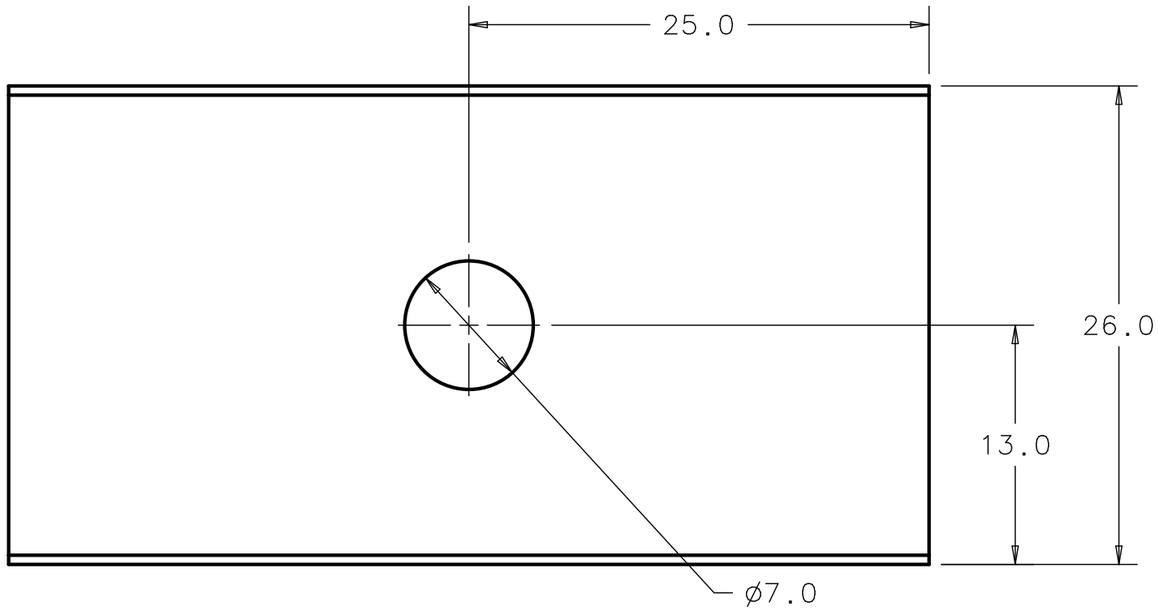

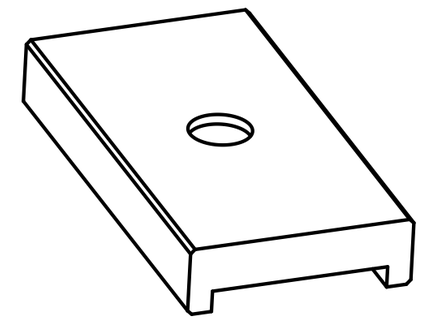

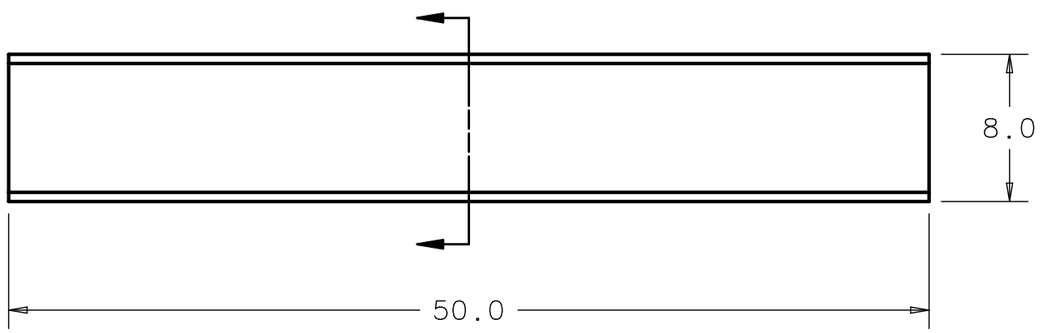

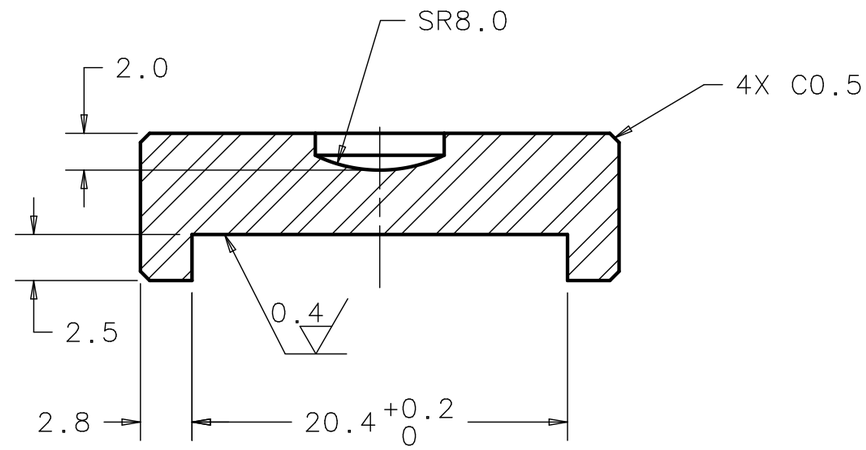

804605	806435
804605	789655
804605	788515
NEXT ASSY	USED ON
APPLICATION	

FINISH: N/A

MATERIAL: STAINLESS STEEL 316L

UNLESS OTHERWISE SPECIFIED:
DIMENSIONS ARE IN MILLIMETERS
INTERPRET DIM PER ASME Y14.5M-1994
BREAK ALL SHARP EDGES .75 MAX.
ALL MACH. SURFACES 3.2 MAX.

TOLERANCES: X ± -- ; .X ± 0.5 ; .XX ± -- ; ANGLE ± 1°

THIRD ANGLE PROJECTION

DRAWN BY V. MARTINEZ	DATE 24JUN09	
CHECKED BY C.GRIMM	DATE 01FEB10	
ENGINEERED BY Y.ORLOV	DATE 02FEB10	
DATABASE DESY EDMS	TEAM/GROUP T4CM DESIGN	
CAD I-DEAS	SOLID MODEL NO. D00000001195342	

FERMI NATIONAL ACCELERATOR LABORATORY
UNITED STATES DEPARTMENT OF ENERGY
P.O. BOX 500, BATAVIA, IL 60510-0500

TITLE: ILC TYPE IV CRYOMODULE HGR PIPE T4CM ABUTMENT_BEARING-50MM

SIZE	CAGE CODE	DWG NO.	REV
A3	0U5R6	D00000000885675	B

SCALE 3:1 | DO NOT SCALE DWG | SHEET 1 OF 1

Created: 14:37:06 on 01-03-10 (D-M-Y) By: victormm State: 1-INITIAL

NOTES (UNLESS OTHERWISE SPECIFIED):

1. PART MUST BE FREE OF DIRT, GREASE, OIL AND CHIPS.
2. PART TO BE FREE OF ALL SHARP EDGES, CORNERS, AND BURRS.

REVISION HISTORY

CAD MAINTAINED. CHANGES SHALL BE INCORPORATED BY THE DESIGN ACTIVITY.

ZONE	REV	DESCRIPTION	DATE	APPROVED
	A	INITIAL RELEASE: ER# ILC-000048		
B6 C6	B	ECO# 000085 DIM 19.7 WAS 19.0 DIM 6X 2.8 WAS 6X 2.5	01MAR10	Y.ORLOV

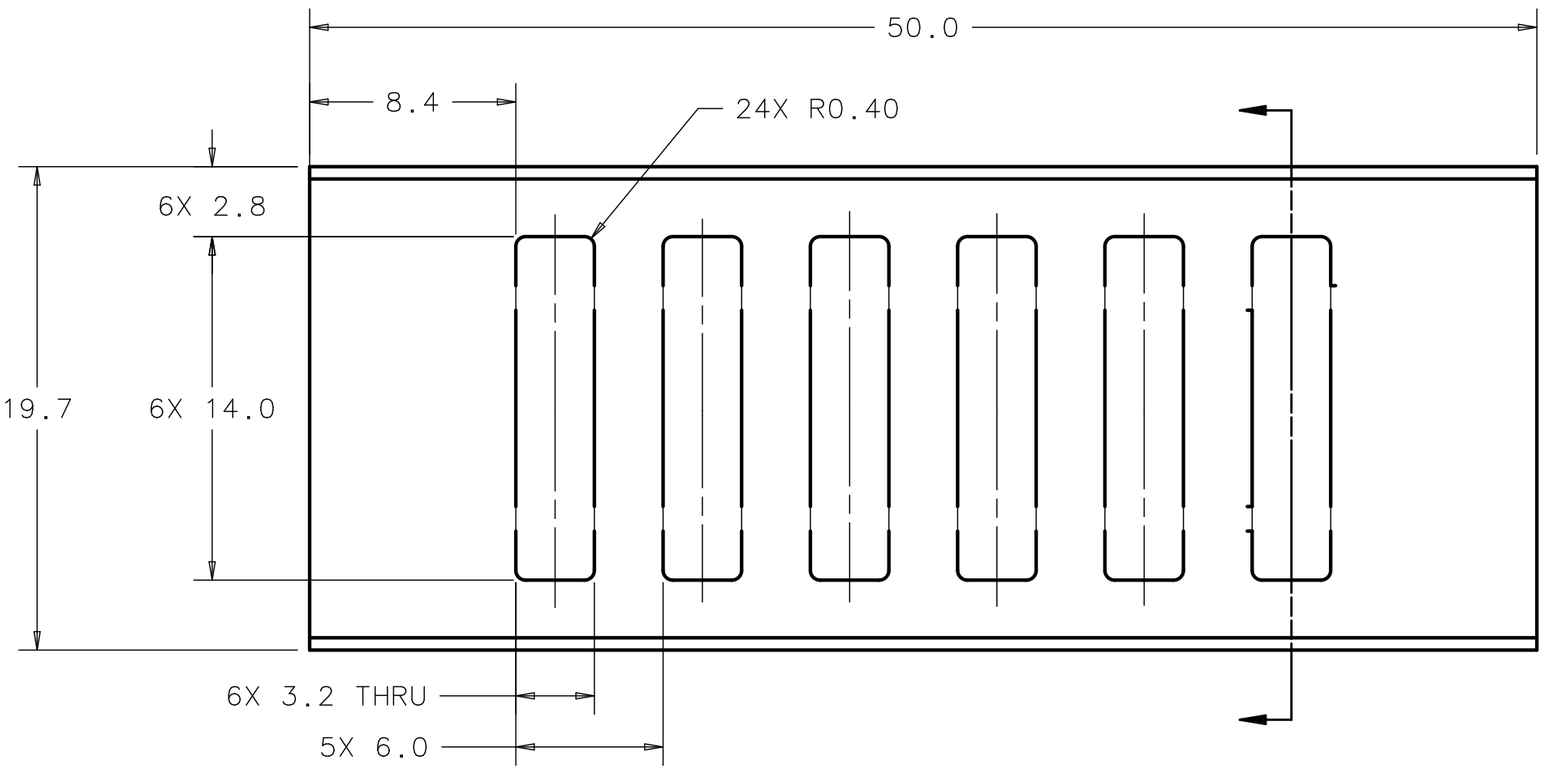

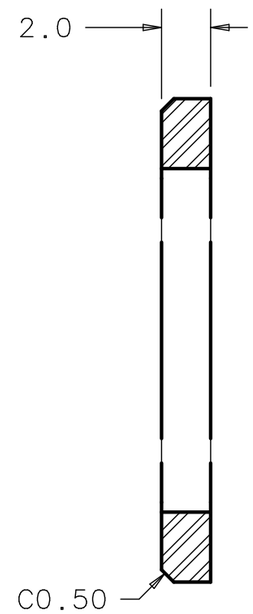

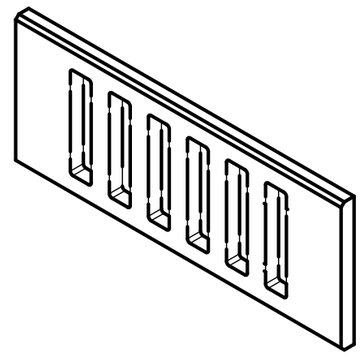

806435	788365
789655	788365
788515	788365
NEXT ASSY	USED ON
APPLICATION	

FINISH: N/A

MATERIAL: 316L STAINLESS STEEL

UNLESS OTHERWISE SPECIFIED:
DIMENSIONS ARE IN MILLIMETERS
INTERPRET DIM PER ASME Y14.5M-1994
BREAK ALL SHARP EDGES .75 MAX.
ALL MACH. SURFACES 3.2 MAX.

TOLERANCES: X ± 1, .X ± 0.5, .XX ± --, ANGLE ± 1°

THIRD ANGLE PROJECTION

DRAWN BY: V. MARTINEZ	DATE: 01FEB10	
CHECKED BY: C.GRIMM	DATE: 01FEB10	
ENGINEERED BY: Y.ORLOV	DATE: 02FEB10	
DATABASE: DESY EDMS	TEAM/GROUP: T4CM DESIGN	
CAD: I-DEAS	SOLID MODEL NO.: D00000001195352	

FERMI NATIONAL ACCELERATOR LABORATORY
UNITED STATES DEPARTMENT OF ENERGY
P.O. BOX 500, BATAVIA, IL 60510-0500

TITLE: ILC TYPE IV CRYOMODULE HGR PIPE T4CM SEPARATOR_NEEDLE_LONG

SIZE	CAGE CODE	DWG NO.	REV
A3	0U5R6	D00000000885685	B

SCALE 4:1 | DO NOT SCALE DWG | SHEET 1 OF 1

NOTES:

1. STAMP ITEM 1 AS SHOWN TO RETAIN ITEM 2 IN ITEM 1. DEFORMATION SHOULD ALLOW 100% FREE ROTATIONAL MOVEMENT OF ITEM 2, SEE DETAIL-B. DEFORMATION TECHNIQUE IS VENDORS OPTION.
2. ASSEMBLY MUST BE FREE OF DIRT, GREASE, OIL AND CHIPS.
3. NEEDLE BEARING MAY BE: "INA"-NEEDLE ROLLER FLAT CAGE #BF3020
4. VENDOR'S OPTION: ADDITIONAL PERFORATION ARE ALLOWED BUT WITH NO PINS.

REVISION HISTORY

CAD MAINTAINED. CHANGES SHALL BE INCORPORATED BY THE DESIGN ACTIVITY.

ZONE	REV	DESCRIPTION	DATE	APPROVED
	A	INITIAL RELEASE: ER# ILC-000048		
C3	B	ECO# 000085 DIM (19.7) WAS (19.0) ADDED NOTE 3 & 4, DWG SCALE WAS 4:1	01MAR10	Y.ORLOV
D6	C	ECO# ILC-000095 CHANGED NOTE 3	15-MAR-10	Y.ORLOV

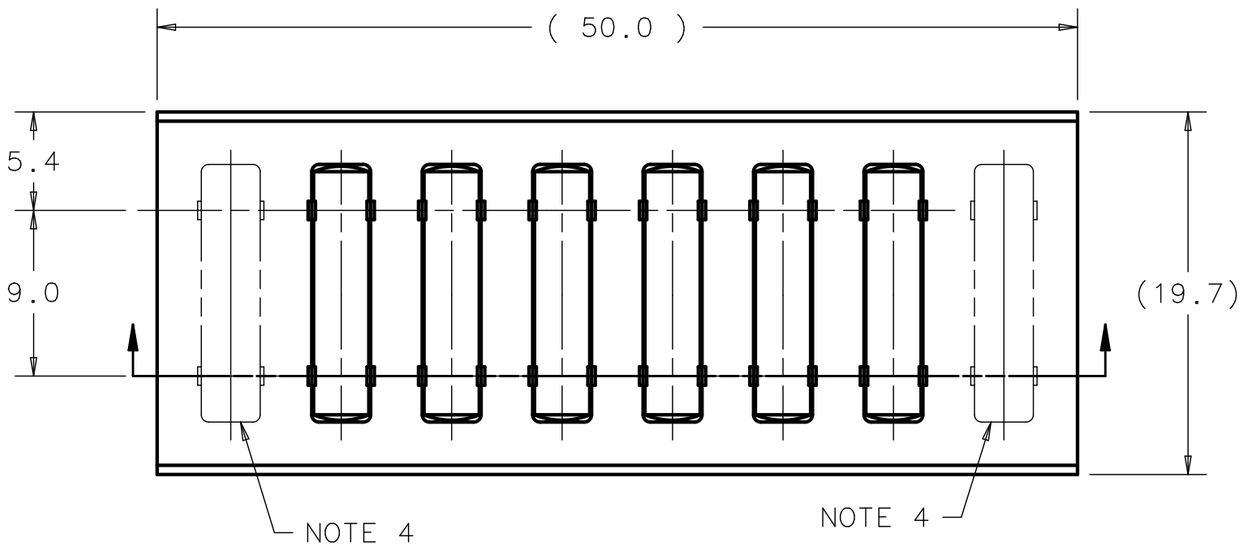

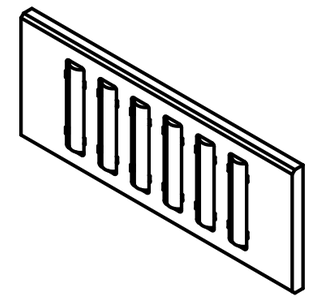

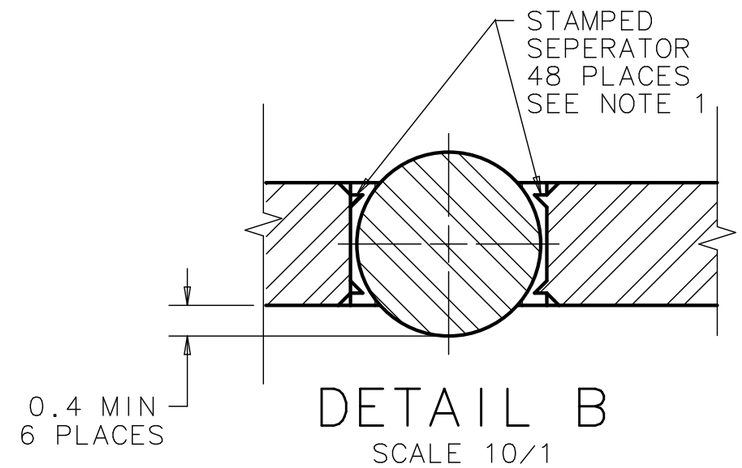

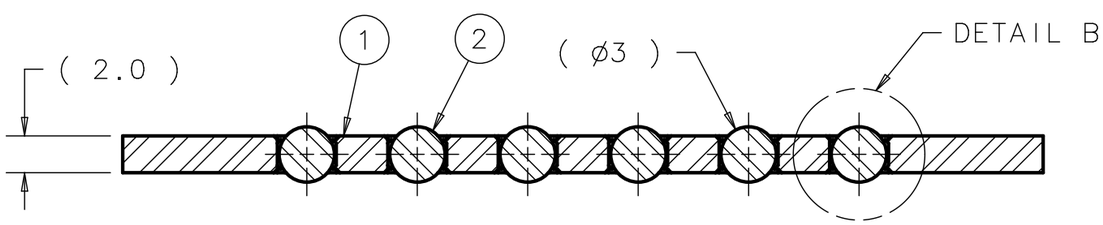

ITEM	P.I.N.	DESCRIPTION	QTY
2	COM'L	NEEDLE ROLLER BEARING W/SPHERICAL END ø3.0 X 13.8 LG. SEE NOTE 3	6
1	885685	SEPERATOR NEEDLE LONG	1

PARTS LIST

NEXT ASSY	USED ON
804605	806435
804605	789655
804605	788515

APPLICATION

FINISH: N/A

MATERIAL: SEE PARTS LIST

UNLESS OTHERWISE SPECIFIED:
DIMENSIONS ARE IN MILLIMETERS
INTERPRET DIM PER ASME Y14.5M-1994
BREAK ALL SHARP EDGES .75 MAX.
ALL MACH. SURFACES 3.2 MAX.

TOLERANCES: X ± -- ; .X ± 0.5 ; .XX ± -- ; ANGLE ± --

THIRD ANGLE PROJECTION

DRAWN BY V. MARTINEZ	DATE 01FEB10	
CHECKED BY C.GRIMM	DATE 01FEB10	
ENGINEERED BY Y.ORLOV	DATE 02FEB10	
DATABASE DESY EDMS	TEAM/GROUP T4CM	
CAD I-DEAS	SOLID MODEL NO. D00000000776703	

FERMI NATIONAL ACCELERATOR LABORATORY
UNITED STATES DEPARTMENT OF ENERGY
P.O. BOX 500, BATAVIA, IL 60510-0500

TITLE: ILC TYPE IV CRYPMODULE HGR PIPE T4CM NEEDLE_SUPPORT-50MM_ASSY

SIZE	CAGE CODE	DWG NO.	REV
A3	0U5R6	D00000000885695	C

SCALE 3:1 | DO NOT SCALE DWG | SHEET 1 OF 1

NOTES (UNLESS OTHERWISE SPECIFIED):

1. PART MUST BE FREE OF DIRT, GREASE, OIL AND CHIPS.
2. PART TO BE FREE OF ALL SHARP EDGES, CORNERS, AND BURRS.

REVISION HISTORY

CAD MAINTAINED. CHANGES SHALL BE INCORPORATED BY THE DESIGN ACTIVITY.

ZONE	REV	DESCRIPTION	DATE	APPROVED
	A	INITIAL RELEASE: ER# ILC-000048		

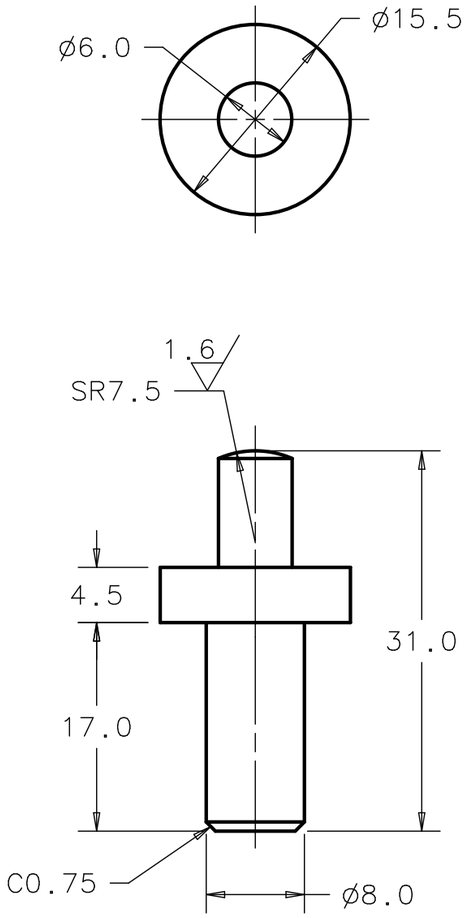

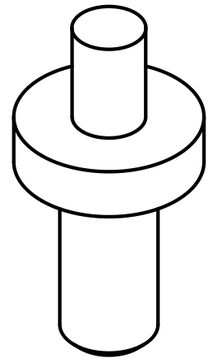

789655	788275
788515	788275
NEXT ASSY	USED ON
APPLICATION	

FINISH: N/A

MATERIAL: STAINLESS STEEL 316L

UNLESS OTHERWISE SPECIFIED:
DIMENSIONS ARE IN MILLIMETERS
INTERPRET DIM PER ASME Y14.5M-1994
BREAK ALL SHARP EDGES .75 MAX.
ALL MACH. SURFACES 3.2 MAX.

TOLERANCES: X ± -- ; .X ± 0.5 ; .XX ± -- ; ANGLE ± 1°

THIRD ANGLE PROJECTION

DRAWN BY V. MARTINEZ	DATE 01FEB10	
CHECKED BY C.GRIMM	DATE 01FEB10	
ENGINEERED BY Y.ORLOV	DATE 02FEB10	
DATABASE DESY EDMS	TEAM/GROUP T4CM DESIGN	
CAD I-DEAS	SOLID MODEL NO. D00000001195362	

FERMI NATIONAL ACCELERATOR LABORATORY
UNITED STATES DEPARTMENT OF ENERGY
P.O. BOX 500, BATAVIA, IL 60510-0500

TITLE: ILC TYPE IV CRYOMODULE HGR PIPE T4CM PIN_SPRING

SIZE	CAGE CODE	DWG NO.	REV
A3	0U5R6	D00000000885705	A

SCALE 2:1 | DO NOT SCALE DWG | SHEET 1 OF 1

NOTES:

1. BELLEVILLE DISC SPRING - DIN 2093
   MATERIAL:CuBe2 - DIN 2.1247
   DEFLECTION = .3 mm AT 75% DEFLECTION
   FORCE = 40 kg AT 75% DEFLECTION
   O.D. = 15.0 mm
   I.D. = 8.2 mm
   THICKNESS = .7 mm
   TOTAL HEIGHT = 1.1 mm

2. ASSEMBLY MUST BE FREE OF DIRT, GREASE, OIL AND CHIPS.

REVISION HISTORY
CAD MAINTAINED. CHANGES SHALL BE INCORPORATED BY THE DESIGN ACTIVITY.

ZONE	REV	DESCRIPTION	DATE	APPROVED
	A	INITIAL RELEASE: ER# ILC-000048		

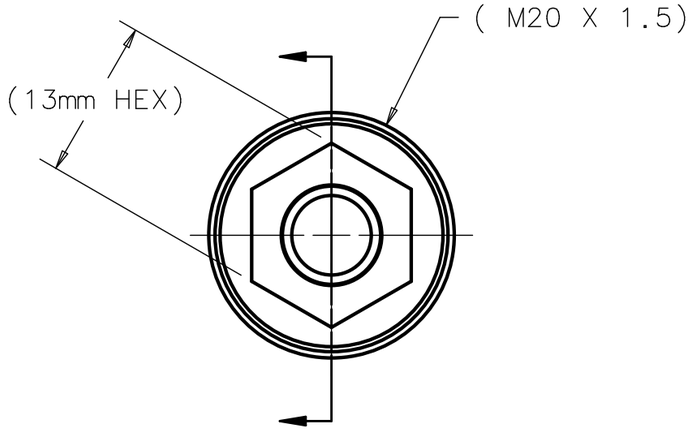

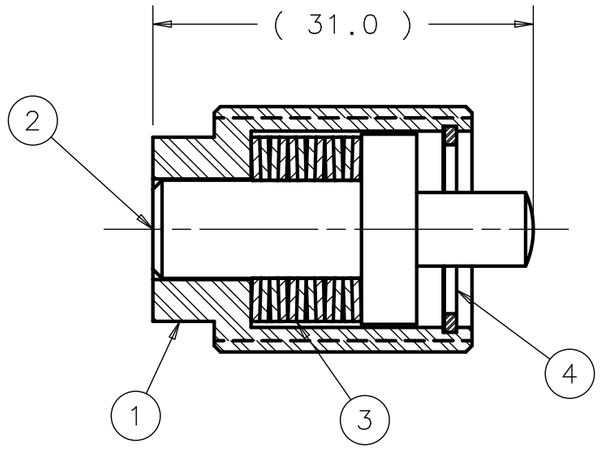

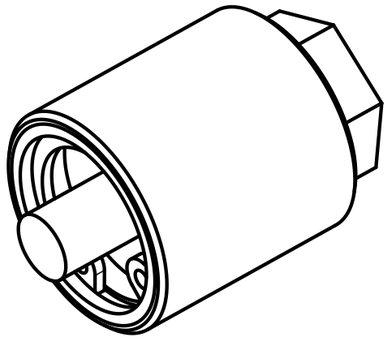

ITEM	P.I.N.	DESCRIPTION	QTY
4	COM'L	INTERNAL RETAINING RING, METRIC S.S., McMASTER-CARR #98394A431	1
3	COM'L	BELLEVILLE DISC SPRING (SEE NOTE 1), D158207	12
2	885705	SPRING PIN	1
1	740371	BUSHING	1

PARTS LIST

NEXT ASSY	USED ON
804605	789655
804605	788515

APPLICATION

FINISH: N/A

MATERIAL: SEE PARTS LIST

UNLESS OTHERWISE SPECIFIED:
DIMENSIONS ARE IN MILLIMETERS
INTERPRET DIM PER ASME Y14.5M-1994
BREAK ALL SHARP EDGES .75 MAX.
ALL MACH. SURFACES 3.2 MAX.

TOLERANCES: X ± -- ; .X ± -- ; .XX ± -- ; ANGLE ± --

THIRD ANGLE PROJECTION

DRAWN BY V. MARTINEZ	DATE 01FEB10	
CHECKED BY C.GRIMM	DATE 01FEB10	
ENGINEERED BY Y.ORLOV	DATE 02FEB10	
DATABASE DESY EDMS	TEAM/GROUP T4CM DESIGN	
CAD I-DEAS	SOLID MODEL NO. D00000000776733	

FERMI NATIONAL ACCELERATOR LABORATORY
UNITED STATES DEPARTMENT OF ENERGY
P.O. BOX 500, BATAVIA, IL 60510-0500

TITLE: ILC TYPE IV CRYOMODULE HGR PIPE T4CM SPRING_JACK_ASSY

SIZE	CAGE CODE	DWG NO.	REV
A3	0U5R6	D00000000885715	A

SCALE 2:1 | DO NOT SCALE DWG | SHEET 1 OF 1

NOTES (UNLESS OTHERWISE SPECIFIED):

1. ASSEMBLY MUST BE FREE OF DIRT, GREASE, OIL AND CHIPS.
2. EST. WT.= 12.3 Kg [27 LBS.].
3. ITEM 18 NOT SHOWN ON TUNER ASSY DWG. ITEM 18 IS PART OF TUNER ASSY HARDWARE KIT.

REVISION HISTORY

CAD MAINTAINED. CHANGES SHALL BE INCORPORATED BY THE DESIGN ACTIVITY.

ZONE	REV	DESCRIPTION	DATE	APPROVED
	A	INITIAL RELEASE ER# ILC-000028		
B3	B	ECO# ILC-000084 UPDATE BOM	08MAR10	S. BARBANOTTI
C3 H12	C	ER# ILC-000132, DWG SCALE WAS .35:1 ADDED ITEMS 16, 17 & 18 DELETED ITEMS 4,5,7 & 13 ADDED NOTES 2 & 3	17NOV10	S. BARBANOTTI

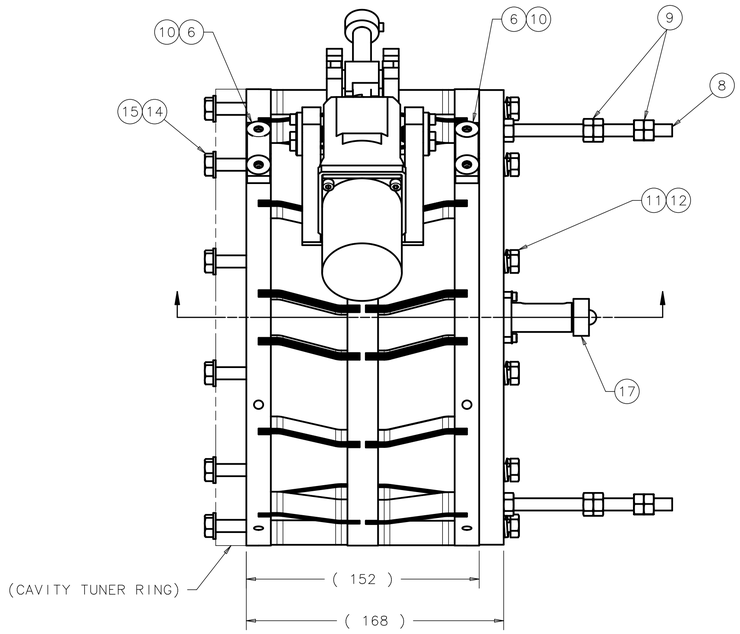

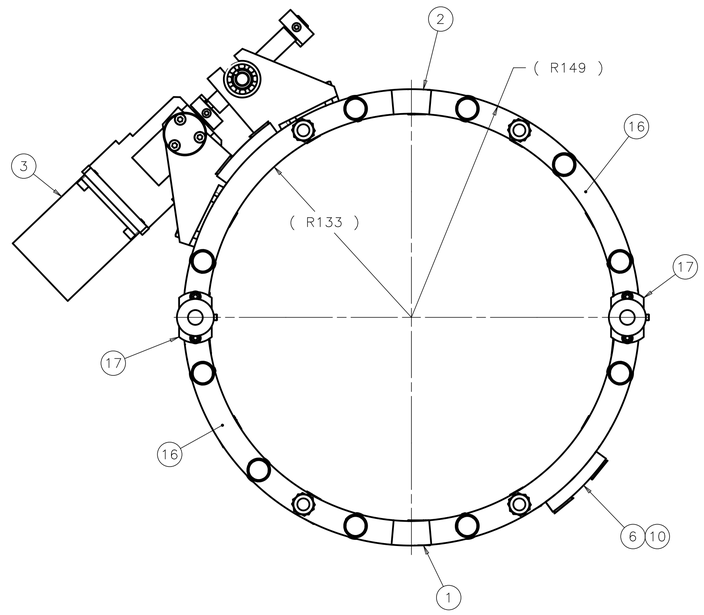

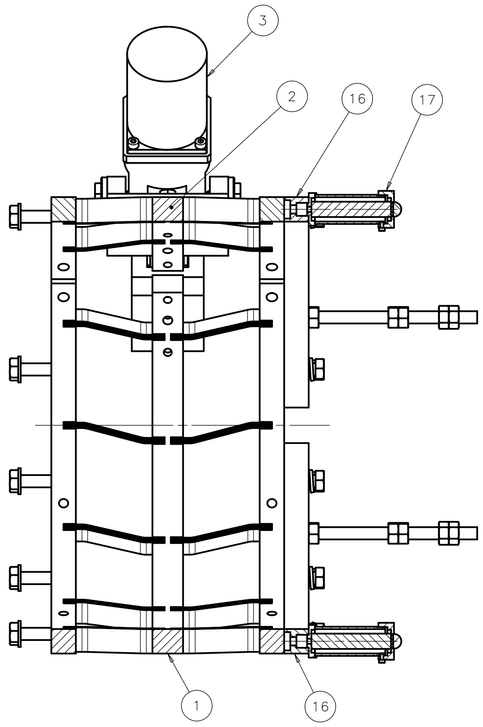

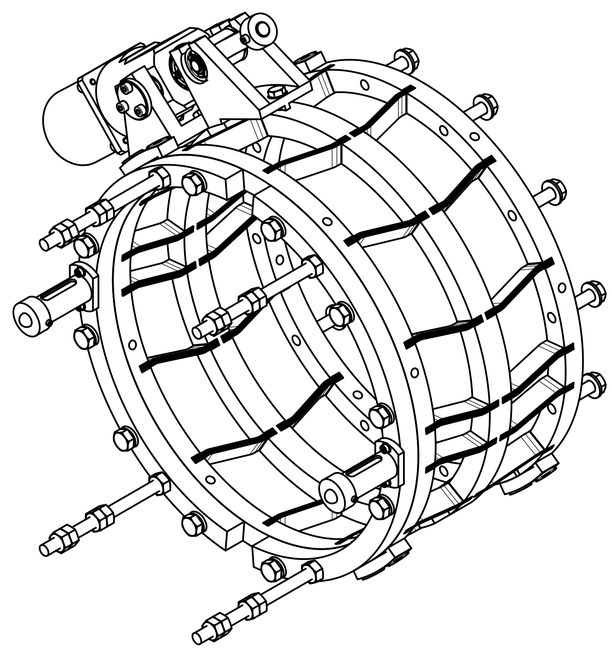

	ITEM	P.I.N.	DESCRIPTION	QTY
NOTE 3	18	COML	SCREW-SH M8 X 1.25 X 35LG, 18-8 S.S. MCMASTER 92605A153 OR EQUIV.	2
	17		FNAL-DW# MB-443662 PIEZO ENCLOSURE ASSEMBLY	2
	16	886085	REINFORCING-RING	2
	15	COML	WASHER FLAT M8 304SS MCM 90965A190 OR EQUIV.	10
	14	COML	SCREW-HEX M8X1.25X25 316SS MCMASTER 93635A322 OR EQUIV.	10
	~~13~~	~~886415~~	~~SCREW-HEX, MODIFIED M8X55 316SS~~	~~2~~
	12	COML	SCREW-HEX M8X1.25X30 316SS MCMASTER 93635A326 OR EQUIV.	10
	11	COML	WASHER-SPRING M8 304SS MCMASTER92153A429 OR EQUIV.	10
	10	COML	SCR FLTHD SHC M8X1.25X25 316SS MCMASTER 93395A407 OR EQUIV.	8
	9	COML	NUT-HEX M8X1.25 316SS MCMASTER 94150A355 OR EQUIV.	22
	8	COML	ROD THREADED M8X1.25X120 316SS MCM 94185A160 OR EQUIV.	4
	~~7~~	~~COML~~	~~PIEZO 10X10X40~~	~~2~~
	6	885375	RING CONNECTOR	4
	~~5~~	~~866395~~	~~PIEZO-SUPPORT RING SIDE ASSY~~	~~2~~
	~~4~~	~~886065~~	~~PIEZO SUPPORT, TUNER SIDE~~	~~2~~
	3	890645	MOTOR HD	1
	2	886415	RING W/BLADE-SUPPORT, TOP	1
	1	886405	RING W/BLADE-SUPPORT, BOTTOM	1

PARTS LIST

-	872825
NEXT ASSY	USED ON
APPLICATION	

FINISH: N/A

MATERIAL: SEE PARTS LIST

UNLESS OTHERWISE SPECIFIED:
DIMENSIONS ARE IN MILLIMETERS
INTERPRET DIM PER ASME Y14.5M-1994
BREAK ALL SHARP EDGES .75 MAX.
ALL MACH. SURFACES 3.2 MAX.

TOLERANCES: X ± 2, .X ± 1, .XX ± 0.13, ANGLE ± .5°

THIRD ANGLE PROJECTION

DRAWN BY J. KURNAT	DATE 12AUG09	
CHECKED BY C. GRIMM	DATE 8SEP09	
ENGINEERED BY S. BARBANOTTI	DATE 8SEP09	
DATABASE DESY EDMS	TEAM/GROUP T4CM	
CAD I-DEAS	SOLID MODEL NO. D00000000774853	

FERMI NATIONAL ACCELERATOR LABORATORY
UNITED STATES DEPARTMENT OF ENERGY
P.O. BOX 500, BATAVIA, IL 60510-0500

TITLE
ILC TYPE IV CRYOMODULE PIEZO SLIM TUNER-INFN ASSY-PIEZO_SLIM_TUNER_INFN

SIZE	CAGE CODE	DWG NO.	REV
A1	0U5R6	D00000000886555	C

SCALE 1:2 | DO NOT SCALE DRAWING | SHEET 1 OF 1

THIS DESIGN IS THE INTELLECTUAL PROPERTY OF INFN ACCORDING TO ISO 16016. THIS DRAWING HAS BEEN REDRAWN WITH INFN'S PERMISSION FOR FABRICATION PURPOSES WITHIN THE USA AND IS TO BE USED SOLELY WITHIN FERMILAB. USAGE OUTSIDE OF FERMILAB MUST BE APPROVED BY INFN, MILAN.

REVISION HISTORY CAD MAINTAINED. CHANGES SHALL BE INCORPORATED BY THE DESIGN ACTIVITY.				
ZONE	REV	DESCRIPTION	DATE	APPROVED
	A	INITIAL RELEASE: ILC-000044		

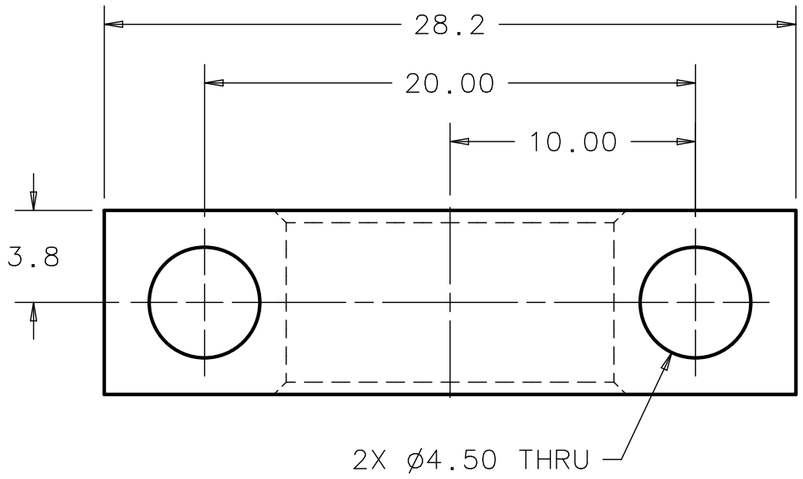

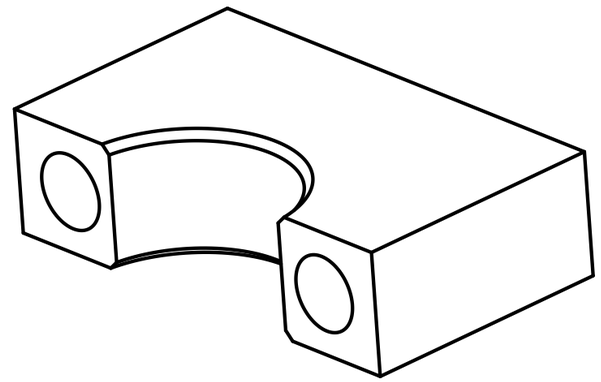

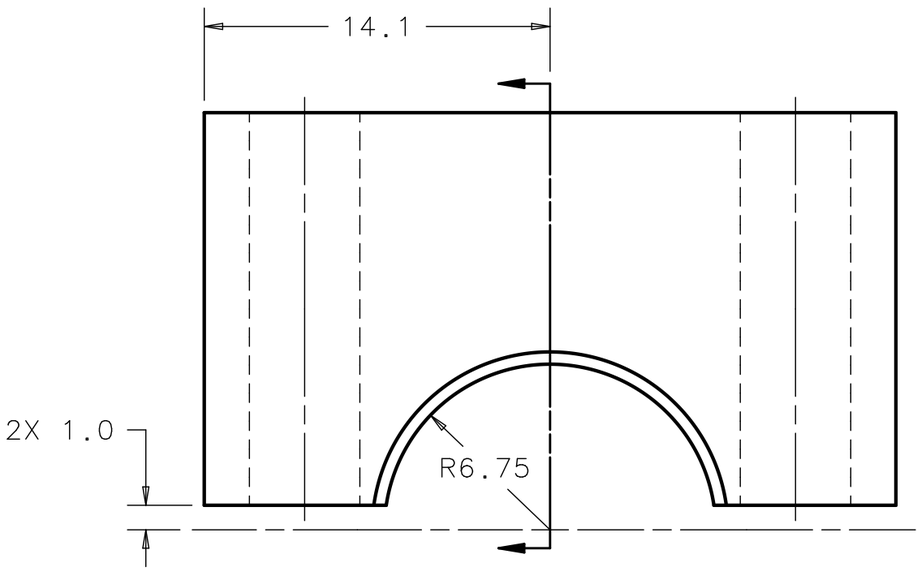

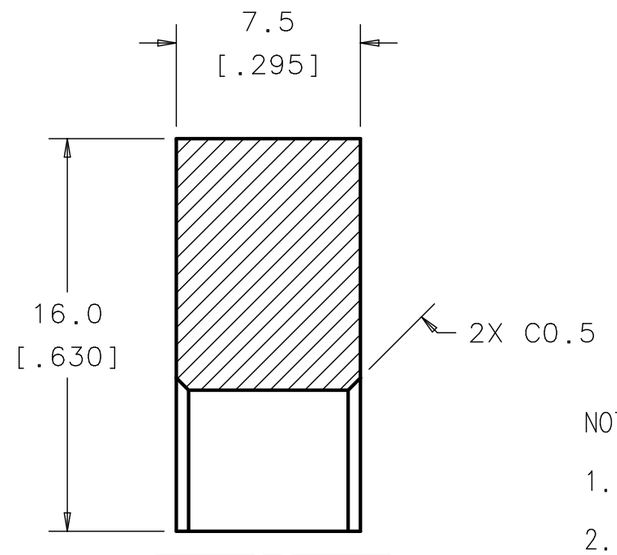

NOTES (UNLESS OTHERWISE SPECIFIED):

1. PART MUST BE FREE OF DIRT, GREASE, OIL AND CHIPS.
2. DIMENSIONS IN [X.XX] ARE IN INCHES.
3. PART MAY BE FABRICATED IN CONJUCTION WITH P/N: 897855 AND CUT IN HALF TO PRODUCE FINAL PARTS.

899075	-
899105	899135
NEXT ASSY	USED ON
APPLICATION	

FINISH N/A	UNLESS OTHERWISE SPECIFIED: DIMENSIONS ARE IN MILLIMETERS INTERPRET DIM PER ASME Y14.5M-1994 BREAK ALL SHARP EDGES 0.50 MAX. ALL MACH. SURFACES 3.2 MAX.	DRAWN BY V. MARTINEZ	DATE 25NOV09	FERMI NATIONAL ACCELERATOR LABORATORY UNITED STATES DEPARTMENT OF ENERGY P.O. BOX 500, BATAVIA, IL 60510-0500
		CHECKED BY C.GRIMM	DATE 25JAN10	TITLE 1.3 GHz CRYOMODULE COOLING STRAPS HOM_CLAMP-LOWER_HALF
MATERIAL COPPER ETP	TOLERANCES X ± 1 X.X ± 0.5 X.XX ± 0.13 ANGLE ± 1°	ENGINEERED BY Y.ORLOV	DATE 26JAN10	
	THIRD ANGLE PROJECTION	DATABASE DESY EDMS	TEAM/GROUP T4CM DESIGN	SIZE A3 / CAGE CODE 0U5R6 / DWG NO. D00000000897845 / REV A
		CAD I-DEAS	SOLID MODEL NO. D00000001275912	SCALE 4:1 / DO NOT SCALE DWG / SHEET 1 OF 1

REVISION HISTORY CAD MAINTAINED. CHANGES SHALL BE INCORPORATED BY THE DESIGN ACTIVITY.				
ZONE	REV	DESCRIPTION	DATE	APPROVED
	A	INITIAL RELEASE: ILC-000044		

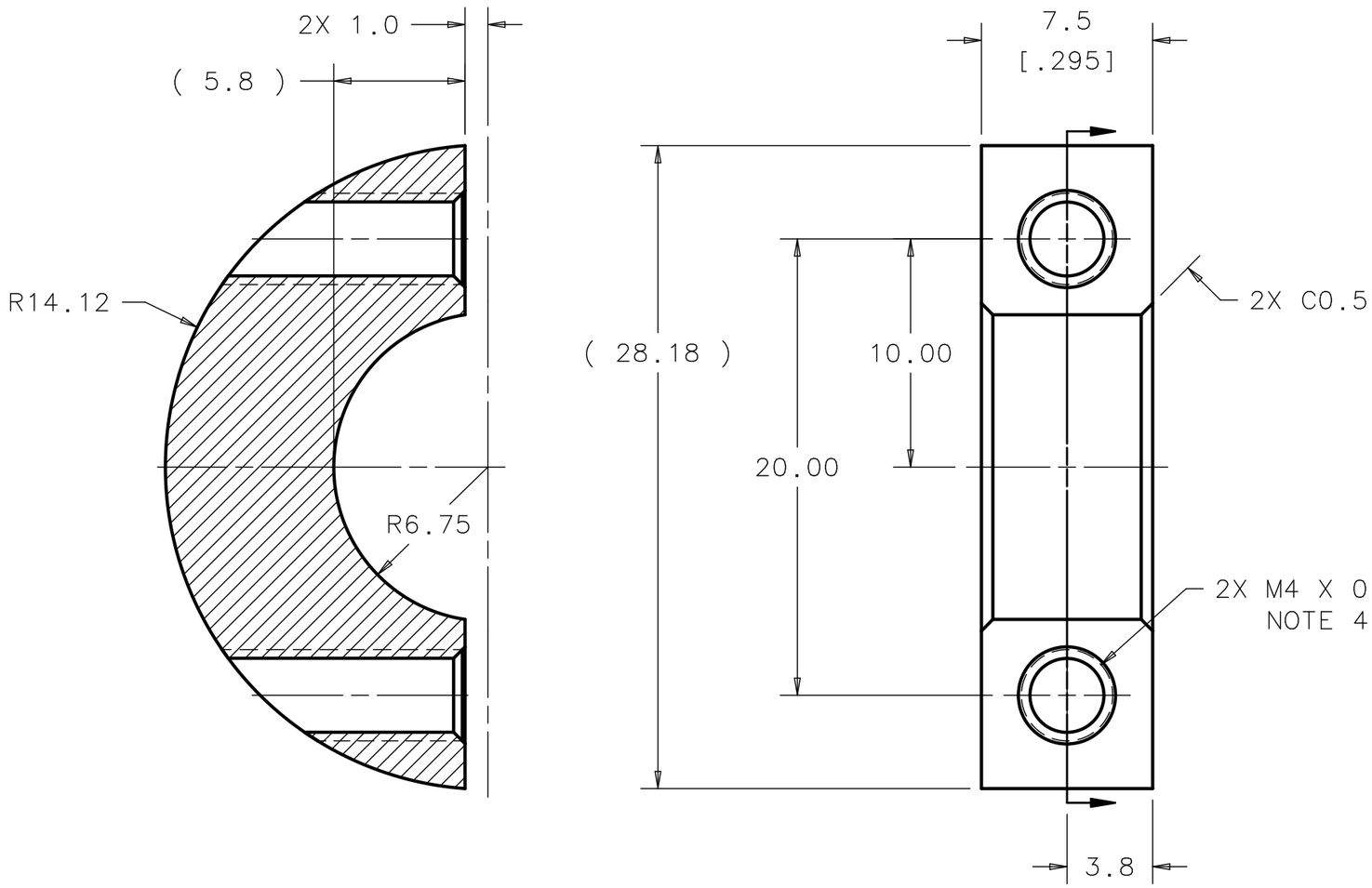

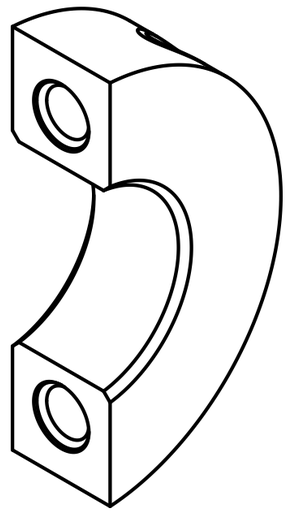

NOTES (UNLESS OTHERWISE SPECIFIED):

1. PART MUST BE FREE OF DIRT, GREASE, OIL AND CHIPS.
2. DIMENSIONS IN [X.XX] ARE IN INCHES.
3. PART MAY BE FABRICATED IN CONJUCTION WITH P/N: 897845 AND CUT IN HALF TO PRODUCE FINAL PARTS.
4. TAPPED HOLES TO HAVE A 90° CSK 0.5 TO 1.0 MM LARGER THEN THE MAJOR DIAMETER.

899075	-
899105	899135
NEXT ASSY	USED ON
APPLICATION	

FINISH: N/A

MATERIAL: COPPER ETP

UNLESS OTHERWISE SPECIFIED:
DIMENSIONS ARE IN MILLIMETERS
INTERPRET DIM PER ASME Y14.5M-1994
BREAK ALL SHARP EDGES 0.75 MAX.
ALL MACH. SURFACES 3.2 MAX.

TOLERANCES: X ± 1, X.X ± 0.5, X.XX ± 0.13, ANGLE ± 1°

THIRD ANGLE PROJECTION

DRAWN BY: V. MARTINEZ	DATE: 25NOV09	
CHECKED BY: C.GRIMM	DATE: 25JAN10	
ENGINEERED BY: Y.ORLOV	DATE: 26JAN10	
DATABASE: DESY EDMS	TEAM/GROUP: T4CM DESIGN	
CAD: I-DEAS	SOLID MODEL NO.: D00000001275922	

FERMI NATIONAL ACCELERATOR LABORATORY
UNITED STATES DEPARTMENT OF ENERGY
P.O. BOX 500, BATAVIA, IL 60510-0500

TITLE: 1.3 GHz CRYOMODULE COOLING STRAPS HOM_CLAMP-UPPER_HALF

SIZE	CAGE CODE	DWG NO.	REV
A3	0U5R6	D00000000897855	A

SCALE 4:1 | DO NOT SCALE DWG | SHEET 1 OF 1

REVISION HISTORY CAD MAINTAINED. CHANGES SHALL BE INCORPORATED BY THE DESIGN ACTIVITY.				
ZONE	REV	DESCRIPTION	DATE	APPROVED
	A	INITIAL RELEASE: ILC-000044		

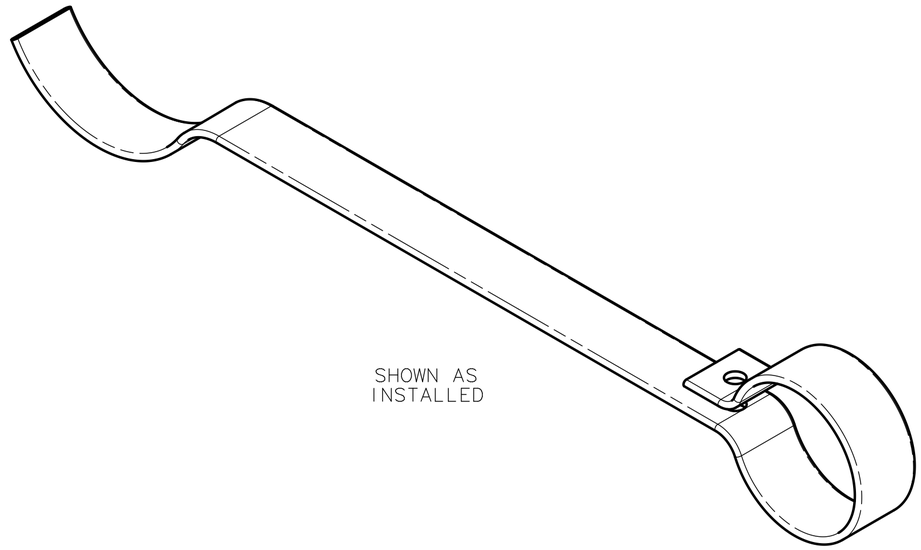

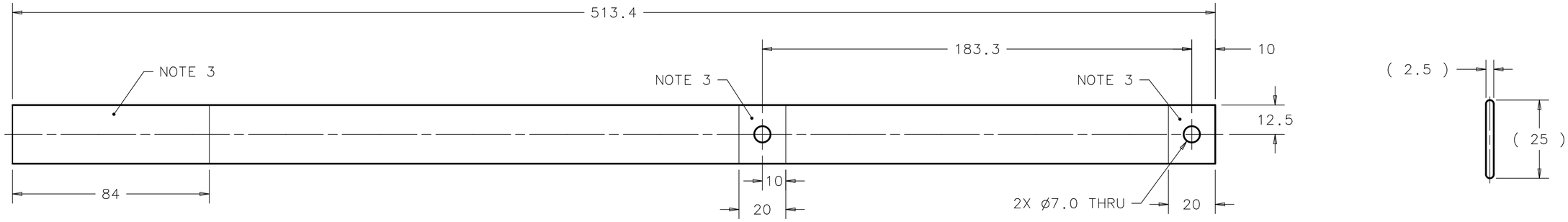

NOTES (UNLESS OTHERWISE SPECIFIED):

1. PART MUST BE FREE OF DIRT, GREASE, OIL AND CHIPS.
2. COPPER BRAID- FTCB15-40; P/N 557290
   ERICO INC. SOLON, OH 1-800-497-4304
3. SOLDER REGION. APPLY SOLDER ON BOTH SIDES PRIOR
   TO DRILLING THRU HOLES.

-	899145
NEXT ASSY	USED ON
APPLICATION	

FINISH N/A	UNLESS OTHERWISE SPECIFIED: DIMENSIONS ARE IN MILLIMETERS INTERPRET DIM PER ASME Y14.5M-1994 BREAK ALL SHARP EDGES .75 MAX. ALL MACH. SURFACES 3.2 MAX.	DRAWN BY V. MARTINEZ	DATE 24NOV09	FERMI NATIONAL ACCELERATOR LABORATORY UNITED STATES DEPARTMENT OF ENERGY P.O. BOX 500, BATAVIA, IL 60510-0500
		CHECKED BY C.GRIMM	DATE 25JAN10	TITLE 1.3 GHz CRYOMODULE COOLING STRAPS BRAID_TUNER-MOTOR
MATERIAL COPPER BRAID NOTE 2	TOLERANCES X ± 2 .X ± 0.8 .XX ± 0.13 ANGLE ± 1°	ENGINEERED BY Y.ORLOV	DATE 26JAN10	
	THIRD ANGLE PROJECTION	DATABASE DESY EDMS	TEAM/GROUP	SIZE A2 / CAGE CODE 0U5R6 / DWG NO. D00000000898125 / REV A
		CAD I-DEAS	SOLID MODEL NO. D00000001279142	SCALE 3:4 / DO NOT SCALE DWG / SHEET 1 OF 1

REVISION HISTORY CAD MAINTAINED. CHANGES SHALL BE INCORPORATED BY THE DESIGN ACTIVITY.				
ZONE	REV	DESCRIPTION	DATE	APPROVED
	A	INITIAL RELEASE: ILC-000044		

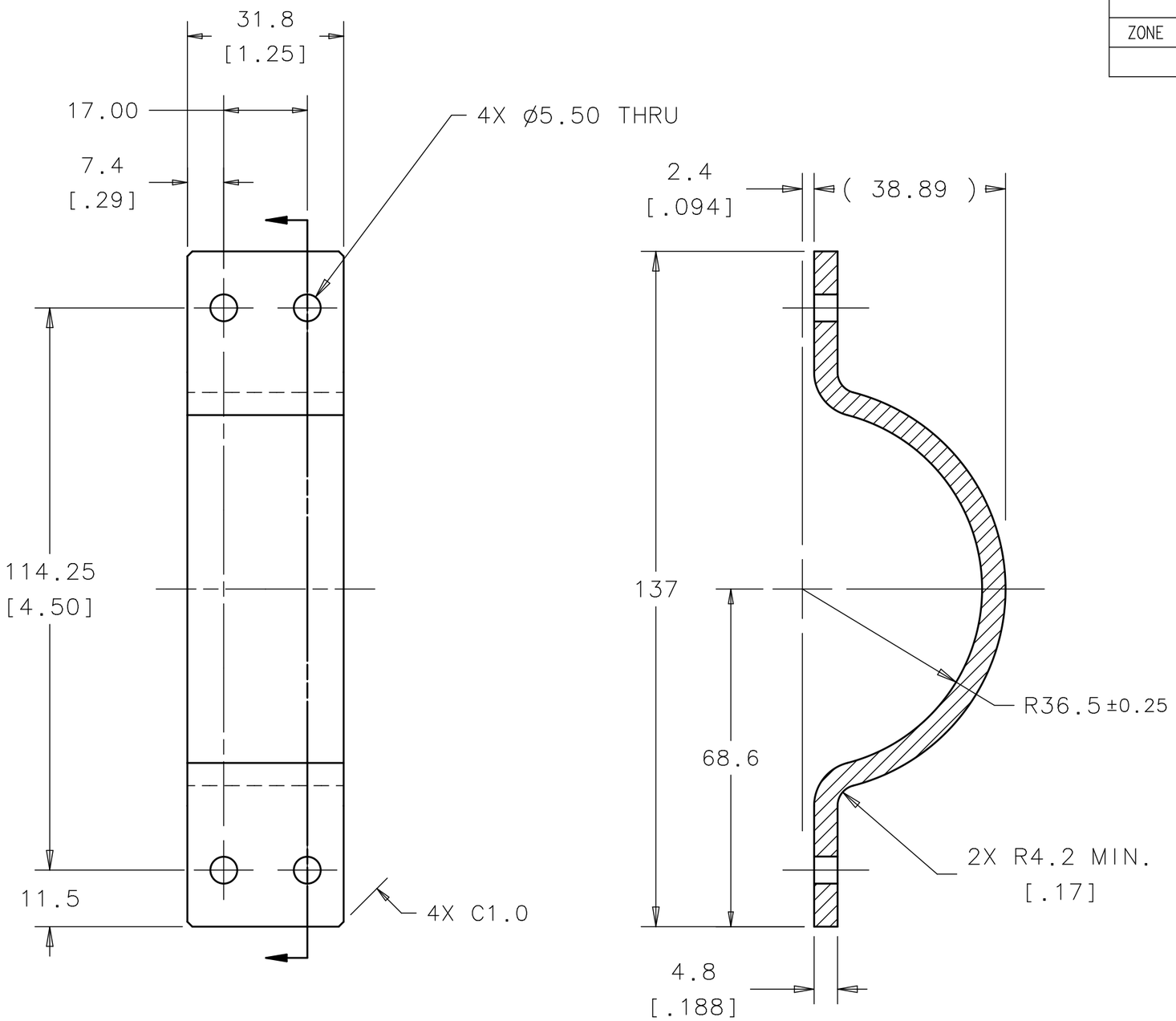

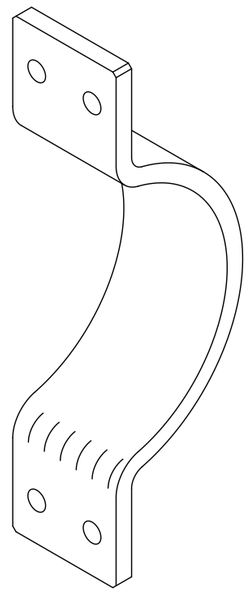

NOTES (UNLESS OTHERWISE SPECIFIED):

1. PART MUST BE FREE OF DIRT, GREASE, OIL AND CHIPS.
2. DIMENSIONS IN [X.XX] ARE IN INCHES.

-	899145
-	899105
-	899075
NEXT ASSY	USED ON
APPLICATION	

FINISH: N/A

MATERIAL: COPPER ETP

UNLESS OTHERWISE SPECIFIED:
DIMENSIONS ARE IN MILLIMETERS
INTERPRET DIM PER ASME Y14.5M-1994
BREAK ALL SHARP EDGES 0.50 MAX.
ALL MACH. SURFACES 3.2 MAX.

TOLERANCES: X ± 1, X.X ± 0.5, X.XX ± 0.13, ANGLE ± 1°

THIRD ANGLE PROJECTION

DRAWN BY V. MARTINEZ	DATE 24NOV09		
CHECKED BY C.GRIMM	DATE 25JAN10		
ENGINEERED BY Y.ORLOV	DATE 26JAN10		
DATABASE DESY EDMS	TEAM/GROUP T4CM DESIGN		
CAD I-DEAS	SOLID MODEL NO. D00000001279472		

FERMI NATIONAL ACCELERATOR LABORATORY
UNITED STATES DEPARTMENT OF ENERGY
P.O. BOX 500, BATAVIA, IL 60510-0500

TITLE: 1.3 GHz CRYOMODULE COOLING STRAPS CLAMP_HEAT-SINK

SIZE	CAGE CODE	DWG NO.	REV
A3	0U5R6	D00000000898185	A

SCALE 1:1 | DO NOT SCALE DWG | SHEET 1 OF 1

NOTES (UNLESS OTHERWISE SPECIFIED):

1. PART MUST BE FREE OF DIRT, GREASE, OIL AND CHIPS.
2. PART TO BE FREE OF ALL SHARP EDGES, CORNERS, AND BURRS.
3. TRANSITION FROM R122.0 TO 123.0 MUST OCCUR BETWEEN ANGLE GIVEN, RADII & BEND ANGLE TO BE DETERMINED BY VENDOR.
4. PEMNUT HOLE SIZE TO BE DETERMINED BY VENDORS CHOICE OF PEMNUT STYLE. PEMNUT THREAD SIZE SHALL BE MAINTAINED AS PER ASSEMBLY DRAWING #902125.
5. VENDOR SHALL FOLLOW FERMILAB ENGINEERING SPECIFICATION 5500-ES-371041 WHEN COSTING, FABRICATING, PACKING, AND SHIPPING ALL SHIELDS AND SHIELD ASSEMBLIES.

REVISION HISTORY
CAD MAINTAINED. CHANGES SHALL BE INCORPORATED BY THE DESIGN ACTIVITY.

ZONE	REV	DESCRIPTION	DATE	APPROVED
	A	INITIAL RELEASE ER # ILC-000050		

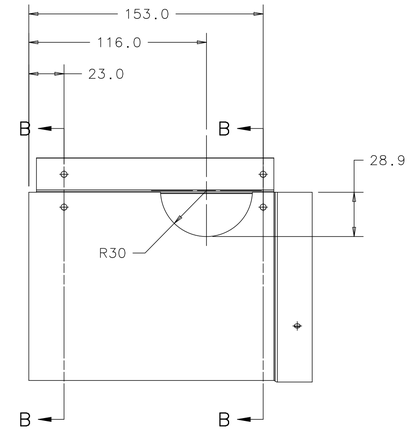

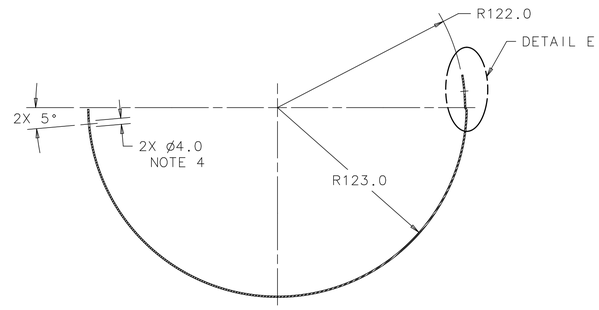

SECTION B-B

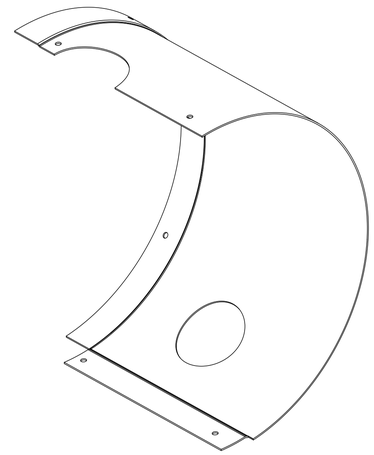

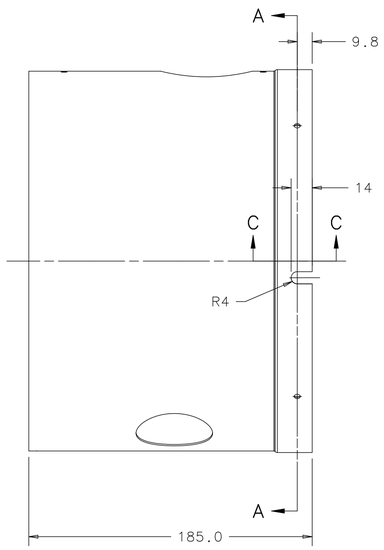

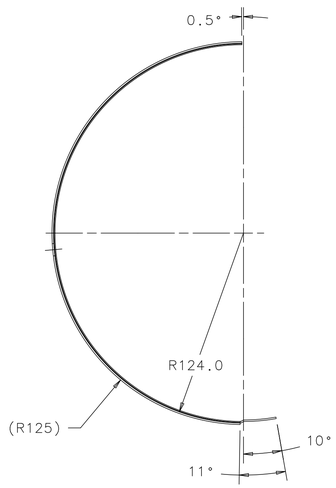

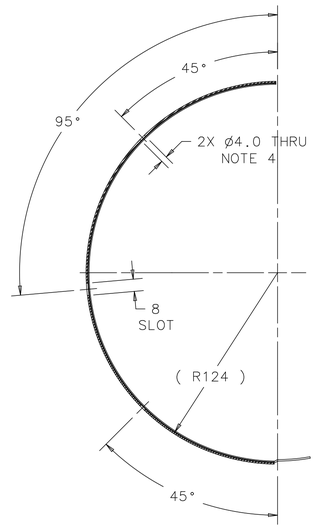

SECTION A-A

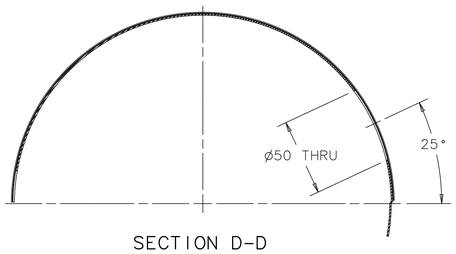

SECTION D-D

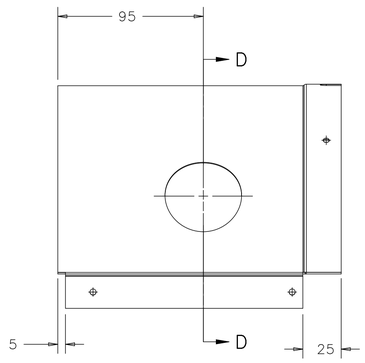

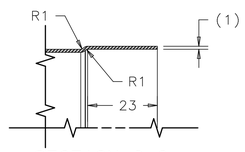

SECTION C-C
SCALE 1:1

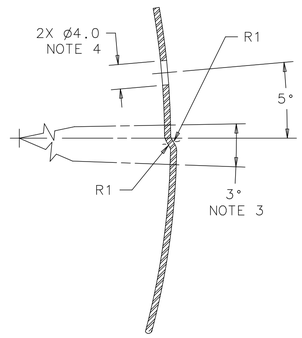

DETAIL E
SCALE 2/1

-	902945
NEXT ASSY	USED ON
APPLICATION	

FINISH: N/A

MATERIAL: CRYOPERM 10, 1MM THICK

UNLESS OTHERWISE SPECIFIED:
DIMENSIONS ARE IN MILLIMETERS
INTERPRET DIM PER ASME Y14.5M-1994
BREAK ALL SHARP EDGES .75 MAX.
ALL MACH. SURFACES 3.2 MAX.

TOLERANCES: X ± 1, .X ± 0.5, .XX ± -, ANGLE ± 1°

THIRD ANGLE PROJECTION

DRAWN BY B. SCHMITZ	DATE 22JAN10	
CHECKED BY C.GRIMM	DATE 05FEB10	
ENGINEERED BY Y.ORLOV	DATE 05FEB10	
DATABASE DESY EDMS	TEAM/GROUP T4CM	
CAD I-DEAS	SOLID MODEL NO. D00000001276402	

FERMI NATIONAL ACCELERATOR LABORATORY
UNITED STATES DEPARTMENT OF ENERGY
P.O. BOX 500, BATAVIA, IL 60510-0500

TITLE
1.3 GHz UNIFIED CRYOMODULE HELIUM VESSEL SHIELD_CAVITY-CORRECTOR-1

SIZE	CAGE CODE	DWG NO.	REV
A1	0U5R6	D00000000898195	A

SCALE 1:2 | DO NOT SCALE DRAWING | SHEET 1 OF 1

REVISION HISTORY CAD MAINTAINED. CHANGES SHALL BE INCORPORATED BY THE DESIGN ACTIVITY.				
ZONE	REV	DESCRIPTION	DATE	APPROVED
	A	INITIAL RELEASE ER # ILC-000050		

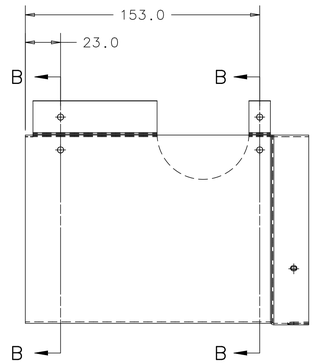

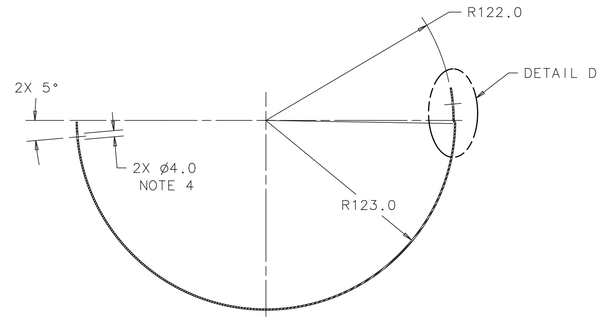

SECTION B-B

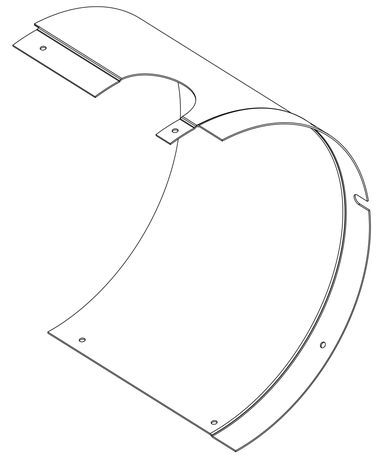

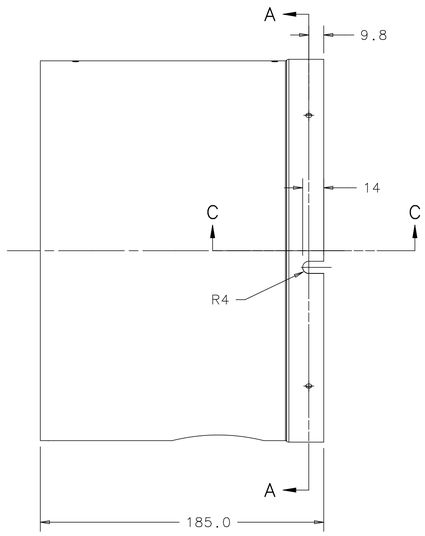

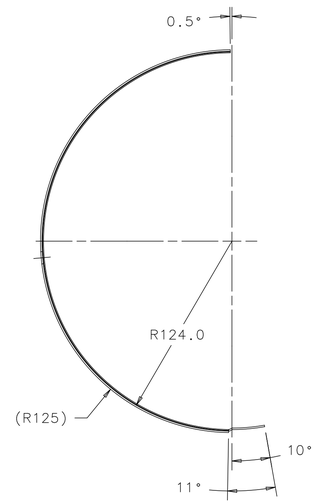

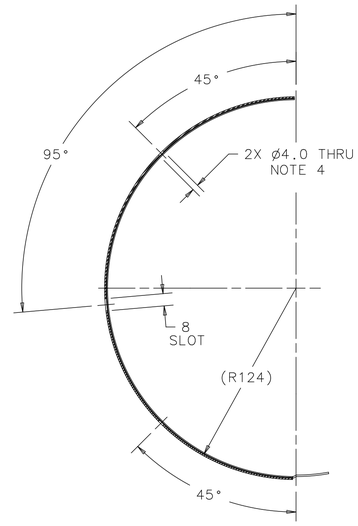

SECTION A-A

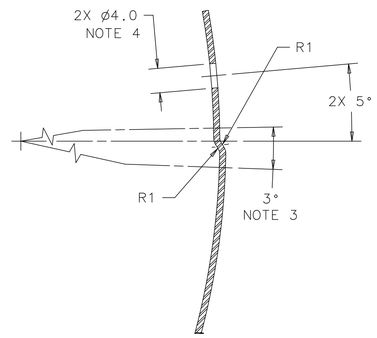

DETAIL D
SCALE 2/1

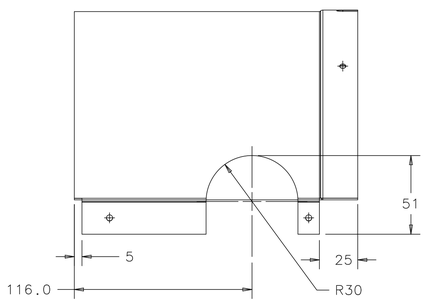

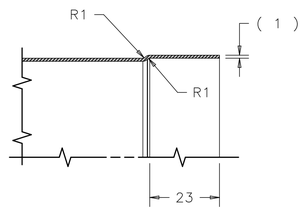

SECTION C-C
SCALE 1:1

NOTES (UNLESS OTHERWISE SPECIFIED):

1. PART MUST BE FREE OF DIRT, GREASE, OIL AND CHIPS.
2. PART TO BE FREE OF ALL SHARP EDGES, CORNERS, AND BURRS.
3. TRANSITION FROM R122.0 TO 123.0 MUST OCCUR BETWEEN ANGLE GIVEN, RADII & BEND ANGLE TO BE DETERMINED BY VENDOR.
4. PEMNUT HOLE SIZE TO BE DETERMINED BY VENDORS CHOICE OF PEMNUT STYLE. PEMNUT THREAD SIZE SHALL BE MAINTAINED AS PER ASSEMBLY DRAWING #902145.
5. VENDOR SHALL FOLLOW FERMILAB ENGINEERING SPECIFICATION 5500-ES-371041 WHEN COSTING, FABRICATING, PACKING, AND SHIPPING ALL SHIELDS AND SHIELD ASSEMBLIES.

-	902935
NEXT ASSY	USED ON
APPLICATION	

FINISH: N/A

MATERIAL: CRYOPERM 10, 1 MM THICK

UNLESS OTHERWISE SPECIFIED:
DIMENSIONS ARE IN MILLIMETERS
INTERPRET DIM PER ASME Y14.5M-1994
BREAK ALL SHARP EDGES .75 MAX.
ALL MACH. SURFACES 3.2 MAX.

TOLERANCES: X ± 1, .X ± 0.5, .XX ± -, ANGLE ± 1°

THIRD ANGLE PROJECTION

DRAWN BY: B. SCHMITZ	DATE: 22JAN10	
CHECKED BY: C.GRIMM	DATE: 05FEB10	
ENGINEERED BY: Y.ORLOV	DATE: 05FEB10	
DATABASE: DESY EDMS	TEAM/GROUP: T4CM	
CAD: I-DEAS	SOLID MODEL NO.: D00000001276382	

FERMI NATIONAL ACCELERATOR LABORATORY
UNITED STATES DEPARTMENT OF ENERGY
P.O. BOX 500, BATAVIA, IL 60510-0500

TITLE: 1.3 GHz UNIFIED CRYOMODULE HELIUM VESSEL SHIELD_CAVITY-CORRECTOR-2

SIZE	CAGE CODE	DWG NO.	REV
A1	0U5R6	D00000000898205	A

SCALE 1:1 | DO NOT SCALE DRAWING | SHEET 1 OF 1

Created: 15:28:16 on 05-02-10 (D-M-Y) By: victormm State: 1-INITIAL

REVISION HISTORY CAD MAINTAINED. CHANGES SHALL BE INCORPORATED BY THE DESIGN ACTIVITY.				
ZONE	REV	DESCRIPTION	DATE	APPROVED
	A	INITIAL RELEASE ER # ILC-000050		

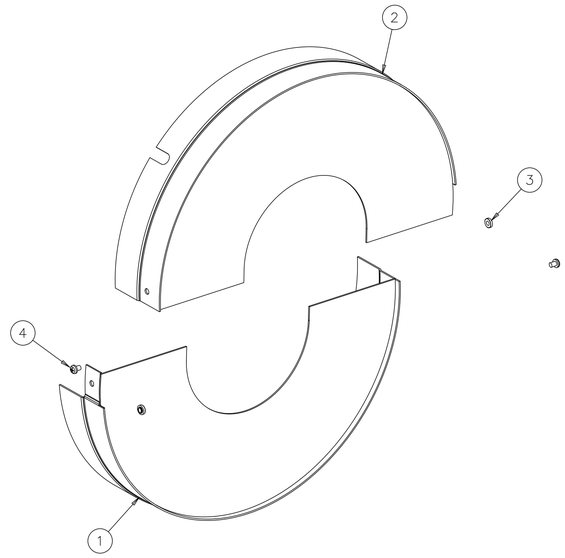

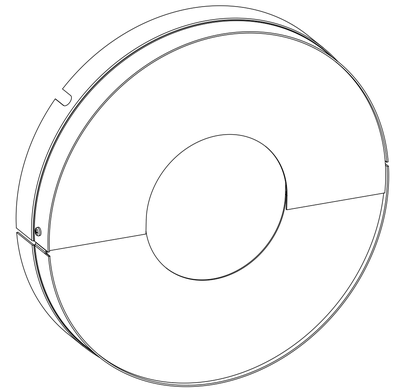

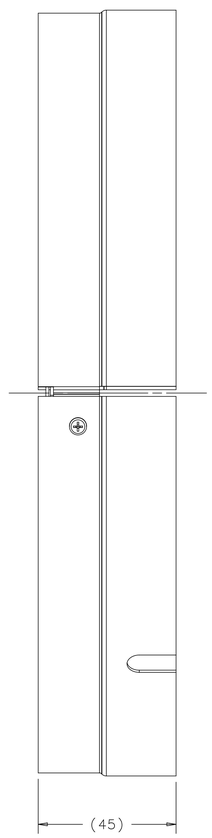

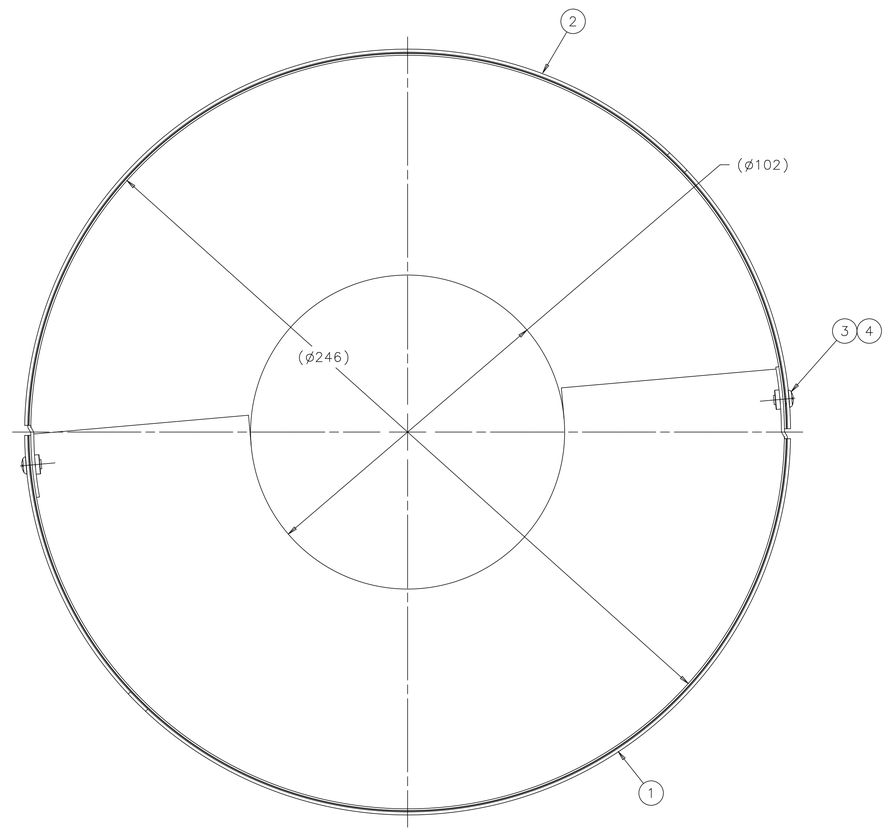

ITEM	P.I.N.	DESCRIPTION	QTY
4	COM'L	PAN HEAD SCREW M3 X 4, 316L S.S.	2
3	COM'L	CLINCH CAPTIVE NUT M3, 316L S.S.	2
2	902855	SHIELD CAVITY-VAT-1 WLDMT	1
1	902775	SHIELD CAVITY-VAT-2 WLDMT	1

PARTS LIST

NOTES (UNLESS OTHERWISE SPECIFIED):

1. ASSEMBLY MUST BE FREE OF DIRT, GREASE, OIL AND CHIPS.
2. VENDOR SHALL SUPPLY THE PART SUFFICIENTLY PACKAGED TO PROTECT THE FINISH AND INTEGRITY DURING SHIPMENT AND STORAGE. THE PACKAGE SHALL BE PROMINENTLY MARKED WITH THE PART NUMBER AND REVISION LEVEL.
3. VENDOR SHALL FOLLOW FERMILAB ENGINEERING SPECIFICATION 5500-ES-371041 WHEN COSTING, FABRICATING, PACKING, AND SHIPPING ALL SHIELD PARTS AND SHIELD ASSEMBLIES.

APPLICATION	
-	
NEXT ASSY	USED ON

FINISH: NOTE 1

MATERIAL: SEE PART LIST

UNLESS OTHERWISE SPECIFIED:
DIMENSIONS ARE IN MILLIMETERS
INTERPRET DIM PER ASME Y14.5M-1994
BREAK ALL SHARP EDGES .75 MAX.
ALL MACH. SURFACES 3.2 MAX.

TOLERANCES: X ± 1, .X ± 0.5, .XX ± -, ANGLE ± 1

THIRD ANGLE PROJECTION

DRAWN BY: B. SCHMITZ	DATE: 20JAN10	
CHECKED BY: C. GRIMM	DATE: 5FEB10	
ENGINEERED BY: Y. ORLOV	DATE: 5FEB10	
DATABASE: DESY EDMS	TEAM/GROUP: T4CM	
CAD: I-DEAS	SOLID MODEL NO.: D00000000814063	

FERMI NATIONAL ACCELERATOR LABORATORY
UNITED STATES DEPARTMENT OF ENERGY
P.O. BOX 500, BATAVIA, IL 60510-0500

TITLE: 1.3 GHz UNIFIED CRYOMODULE HELIUM VESSEL SHIELD_CAVITY-VAT_ASSY

SIZE	CAGE CODE	DWG NO.	REV
A1	0U5R6	D00000000898215	A

SCALE 1:1 | DO NOT SCALE DRAWING | SHEET 1 OF 1

Created: 14:04:47 on 05-02-10 (D-M-Y) By: kurnat State: 1-INITIAL

REVISION HISTORY CAD MAINTAINED. CHANGES SHALL BE INCORPORATED BY THE DESIGN ACTIVITY.				
ZONE	REV	DESCRIPTION	DATE	APPROVED
	A	INITIAL RELEASE ER # ILC-000050		

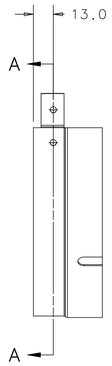

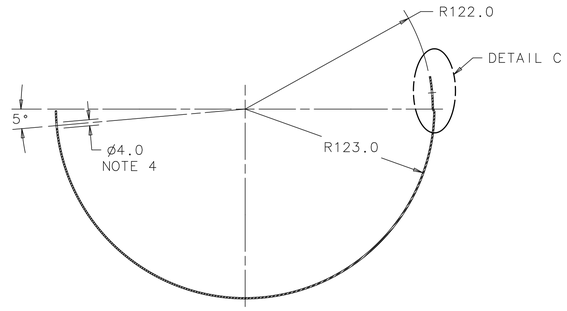

SECTION A-A

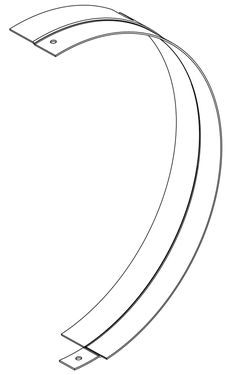

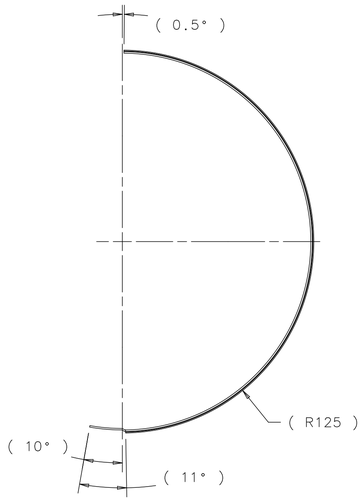

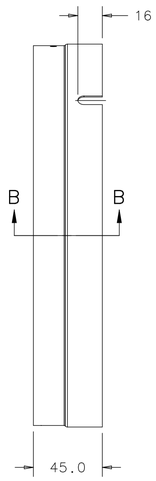

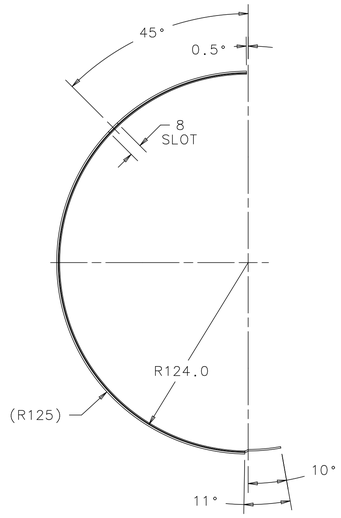

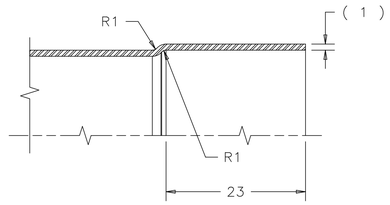

SECTION B-B
SCALE 2/1

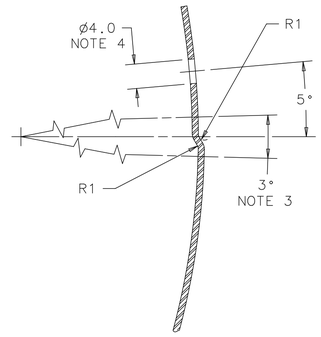

DETAIL C
SCALE 2/1

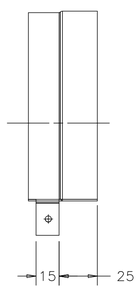

NOTES (UNLESS OTHERWISE SPECIFIED):

1. PART MUST BE FREE OF DIRT, GREASE, OIL AND CHIPS.
2. PART TO BE FREE OF ALL SHARP EDGES, CORNERS, AND BURRS.
3. TRANSITION FROM R122.0 TO 123.0 MUST OCCUR BETWEEN ANGLE GIVEN, RADII & BEND ANGLE TO BE DETERMINED BY VENDOR.
4. PEMNUT HOLE SIZE TO BE DETERMINED BY VENDORS CHOICE OF PEMNUT STYLE. PEMNUT THREAD SIZE SHALL BE MAINTAINED AS PER ASSEMBLY DRAWING #898215.
5. VENDOR SHALL FOLLOW FERMILAB ENGINEERING SPECIFICATION 5500-ES-371041 WHEN COSTING, FABRICATING, PACKING, AND SHIPPING ALL SHIELDS AND SHIELD ASSEMBLIES.

-	902855
NEXT ASSY	USED ON
APPLICATION	

FINISH: N/A

MATERIAL: CRYOPERM 10, 1MM THICK

UNLESS OTHERWISE SPECIFIED:
DIMENSIONS ARE IN MILLIMETERS
INTERPRET DIM PER ASME Y14.5M-1994
BREAK ALL SHARP EDGES .75 MAX.
ALL MACH. SURFACES 3.2 MAX.

TOLERANCES: X ± 1, .X ± 0.5, .XX ± -, ANGLE ± 1°

THIRD ANGLE PROJECTION

DRAWN BY B. SCHMITZ	DATE 20JAN10
CHECKED BY C. GRIMM	DATE 5FEB10
ENGINEERED BY Y. ORLOV	DATE 5FEB10
DATABASE DESY EDMS	TEAM/GROUP T4CM
CAD I-DEAS	SOLID MODEL NO. D00000001279332

FERMI NATIONAL ACCELERATOR LABORATORY
UNITED STATES DEPARTMENT OF ENERGY
P.O. BOX 500, BATAVIA, IL 60510-0500

TITLE: 1.3 GHz UNIFIED CRYOMODULE HELIUM VESSEL SHIELD_CAVITY-VAT-1

SIZE	CAGE CODE	DWG NO.	REV
A1	0U5R6	D00000000898225	A

SCALE 1:2 | DO NOT SCALE DRAWING | SHEET 1 OF 1

Created: 14:05:25 on 05-02-10 (D-M-Y) By: kurnat State: 1-INITIAL

REVISION HISTORY CAD MAINTAINED. CHANGES SHALL BE INCORPORATED BY THE DESIGN ACTIVITY.				
ZONE	REV	DESCRIPTION	DATE	APPROVED
	A	INITIAL RELEASE ER # ILC-000050		

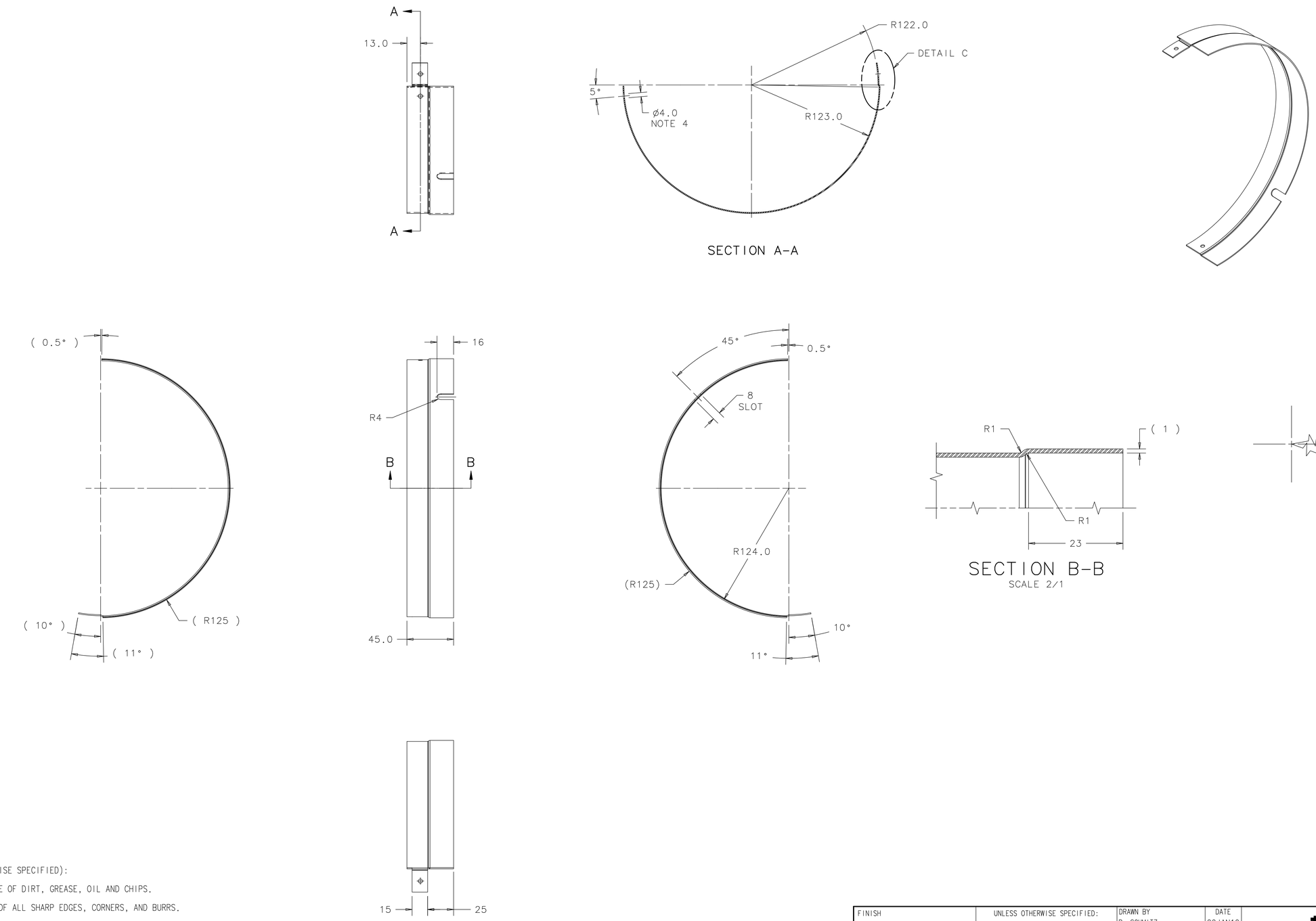

NOTES (UNLESS OTHERWISE SPECIFIED):

1. PART MUST BE FREE OF DIRT, GREASE, OIL AND CHIPS.
2. PART TO BE FREE OF ALL SHARP EDGES, CORNERS, AND BURRS.
3. TRANSITION FROM R122.0 TO 123.0 MUST OCCUR BETWEEN ANGLE GIVEN, RADII & BEND ANGLE TO BE DETERMINED BY VENDOR.
4. PEMNUT HOLE SIZE TO BE DETERMINED BY VENDORS CHOICE OF PEMNUT STYLE. PEMNUT THREAD SIZE SHALL BE MAINTAINED AS PER ASSEMBLY DRAWING #898215.
5. VENDOR SHALL FOLLOW FERMILAB ENGINEERING SPECIFICATION 5500-ES-371041 WHEN COSTING, FABRICATING, PACKING, AND SHIPPING ALL SHIELDS AND SHIELD ASSEMBLIES.

-	902775
NEXT ASSY	USED ON
APPLICATION	

FINISH: N/A

MATERIAL: CRYOPERM 10, 1 MM THICK

UNLESS OTHERWISE SPECIFIED:
DIMENSIONS ARE IN MILLIMETERS
INTERPRET DIM PER ASME Y14.5M-1994
BREAK ALL SHARP EDGES .75 MAX.
ALL MACH. SURFACES 3.2 MAX.

TOLERANCES: X ± 1, .X ± 0.5, .XX ± -, ANGLE ± 1°

THIRD ANGLE PROJECTION

DRAWN BY: B. SCHMITZ	DATE: 20JAN10	
CHECKED BY: C. GRIMM	DATE: 5FEB10	
ENGINEERED BY: Y. ORLOV	DATE: 5FEB10	
DATABASE: DESY EDMS	TEAM/GROUP: T4CM	
CAD: I-DEAS	SOLID MODEL NO.: D00000001279322	

FERMI NATIONAL ACCELERATOR LABORATORY
UNITED STATES DEPARTMENT OF ENERGY
P.O. BOX 500, BATAVIA, IL 60510-0500

TITLE: 1.3 GHz UNIFIED CRYOMODULE HELIUM VESSEL SHIELD_CAVITY-VAT-2

SIZE	CAGE CODE	DWG NO.	REV
A1	0U5R6	D00000000898235	A

SCALE 1:2 | DO NOT SCALE DRAWING | SHEET 1 OF 1

NOTES (UNLESS OTHERWISE SPECIFIED):

1. PART MUST BE FREE OF DIRT, GREASE, OIL AND CHIPS.
2. COPPER BRAID - FTCB15-20; P/N 557250
   ERICO INC. SOLON, OHIO 1-800-497-4304
3. SOLDER REGION. APPLY SOLDER ON BOTH SIDES
   PRIOR TO DRILLING THRU HOLE.

REVISION HISTORY

CAD MAINTAINED. CHANGES SHALL BE INCORPORATED BY THE DESIGN ACTIVITY.

ZONE	REV	DESCRIPTION	DATE	APPROVED
	A	INITIAL RELEASE: ILC-000044		

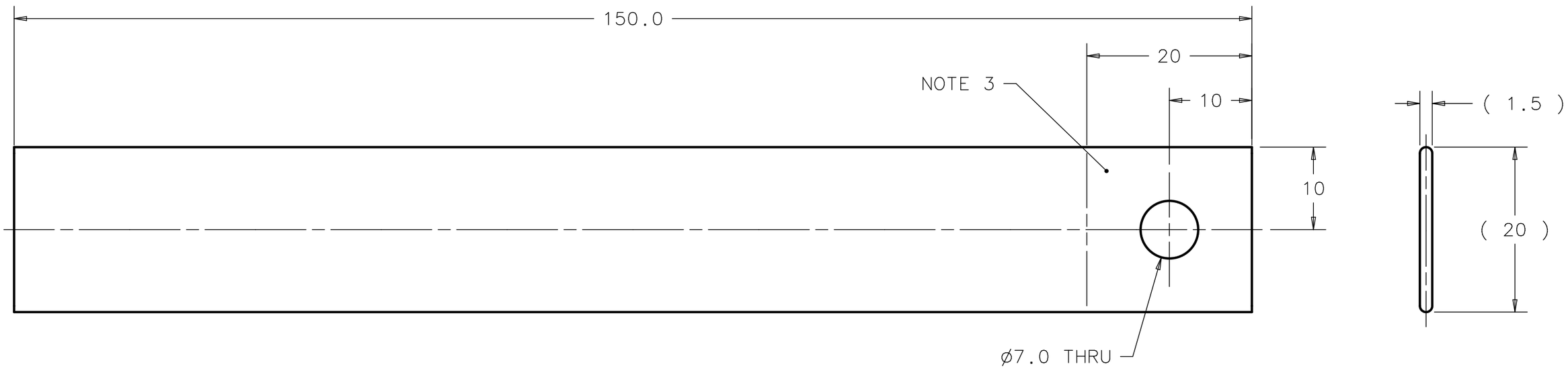

899075	899135
899105	-
NEXT ASSY	USED ON
APPLICATION	

FINISH: N/A

MATERIAL: COPPER BRAID NOTE 2

UNLESS OTHERWISE SPECIFIED:
DIMENSIONS ARE IN MILLIMETERS
INTERPRET DIM PER ASME Y14.5M-1994
BREAK ALL SHARP EDGES .75 MAX.
ALL MACH. SURFACES 3.2 MAX.

TOLERANCES: X ± 2, .X ± 0.8, .XX ± 0.13, ANGLE ± 1°

THIRD ANGLE PROJECTION

DRAWN BY V. MARTINEZ	DATE 25NOV09	
CHECKED BY C.GRIMM	DATE 25JAN10	
ENGINEERED BY Y.ORLOV	DATE 26JAN10	
DATABASE DESY EDMS	TEAM/GROUP	
CAD I-DEAS	SOLID MODEL NO. D00000001279112	

FERMI NATIONAL ACCELERATOR LABORATORY
UNITED STATES DEPARTMENT OF ENERGY
P.O. BOX 500, BATAVIA, IL 60510-0500

TITLE: 1.3 GHz CRYOMODULE COOLING STRAPS BRAID_HOM_CONNECTOR

SIZE	CAGE CODE	DWG NO.	REV
A3	0U5R6	D00000000898435	A

SCALE 2:1 | DO NOT SCALE DWG | SHEET 1 OF 1

Created: 12:48:15 on 26-01-10 (D-M-Y) By: victormm State: 1-INITIAL

REVISION HISTORY

CAD MAINTAINED. CHANGES SHALL BE INCORPORATED BY THE DESIGN ACTIVITY.

ZONE	REV	DESCRIPTION	DATE	APPROVED
	A	INITIAL RELEASE: ILC-000044		
C5	B	ECO# ILC-000137 DIM 872, WAS 1120	16DEC10	Y.ORLOV

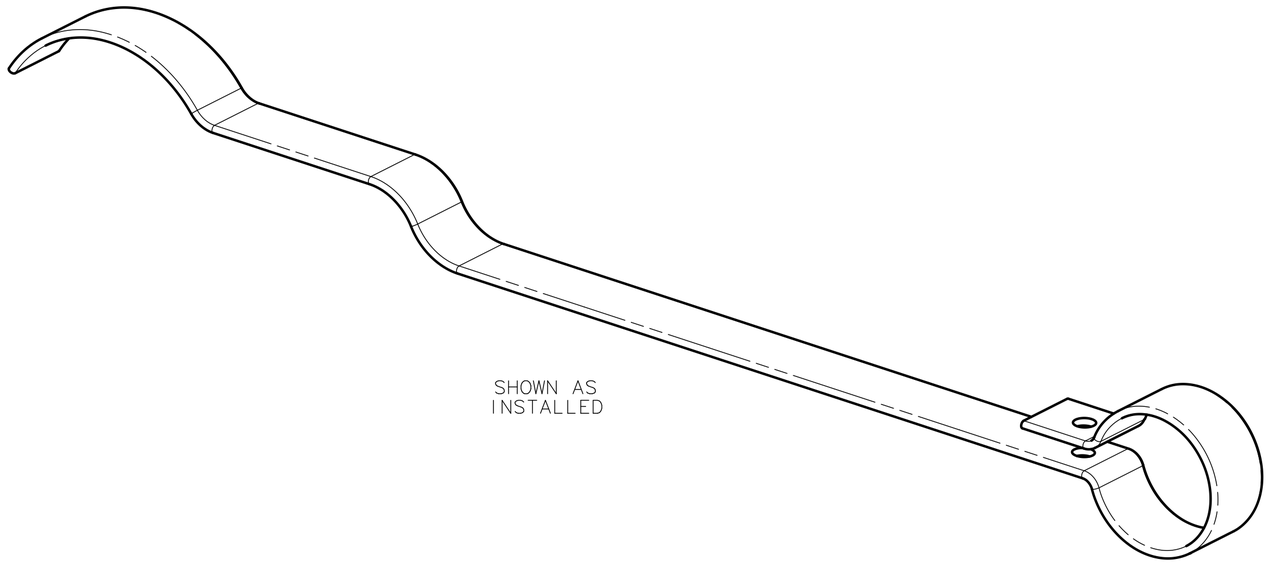

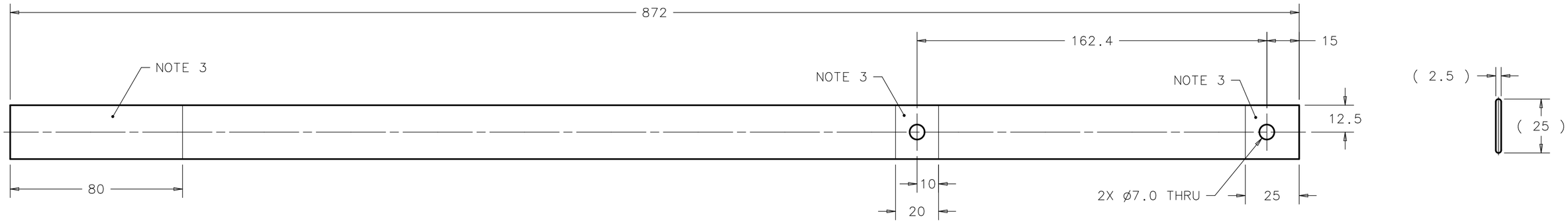

NOTES (UNLESS OTHERWISE SPECIFIED):

1. PART MUST BE FREE OF DIRT, GREASE, OIL AND CHIPS.
2. COPPER BRAID-FTCB15-40; P/N 557290
   ERICO INC. SOLON, OH 1-800-497-4304.
3. SOLDER REGION. APPLY SOLDER ON BOTH SIDES
   PRIOR TO DRILLING THRU HOLES.

-	899075
NEXT ASSY	USED ON
APPLICATION	

FINISH: N/A

MATERIAL: COPPER BRAID NOTE 2

UNLESS OTHERWISE SPECIFIED:
DIMENSIONS ARE IN MILLIMETERS
INTERPRET DIM PER ASME Y14.5M-1994
BREAK ALL SHARP EDGES .75 MAX.
ALL MACH. SURFACES 3.2 MAX.

TOLERANCES: X ± 2, .X ± 0.8, .XX ± 0.13, ANGLE ± 1°

THIRD ANGLE PROJECTION

DRAWN BY: V. MARTINEZ	DATE: 30NOV09	
CHECKED BY: C.GRIMM	DATE: 26JAN10	
ENGINEERED BY: Y.ORLOV	DATE: 26JAN10	
DATABASE: DESY EDMS	TEAM/GROUP	
CAD: I-DEAS	SOLID MODEL NO.: D00000001279102	

FERMI NATIONAL ACCELERATOR LABORATORY
UNITED STATES DEPARTMENT OF ENERGY
P.O. BOX 500, BATAVIA, IL 60510-0500

TITLE: 1.3 GHz CRYOMODULE COOLING STRAPS BRAID_HOM_1

SIZE	CAGE CODE	DWG NO.	REV
A2	0U5R6	D00000000899055	B

SCALE 3:4 | DO NOT SCALE DWG | SHEET 1 OF 1

Created: 09:05:23 on 17-12-10 (D-M-Y) By: victormm State: 1-INITIAL

REVISION HISTORY

CAD MAINTAINED. CHANGES SHALL BE INCORPORATED BY THE DESIGN ACTIVITY.

ZONE	REV	DESCRIPTION	DATE	APPROVED
	A	INITIAL RELEASE: ILC-000044		
C5	B	ECO # ILC-000137 DIM 780, WAS 920	16DEC10	Y. ORLOV

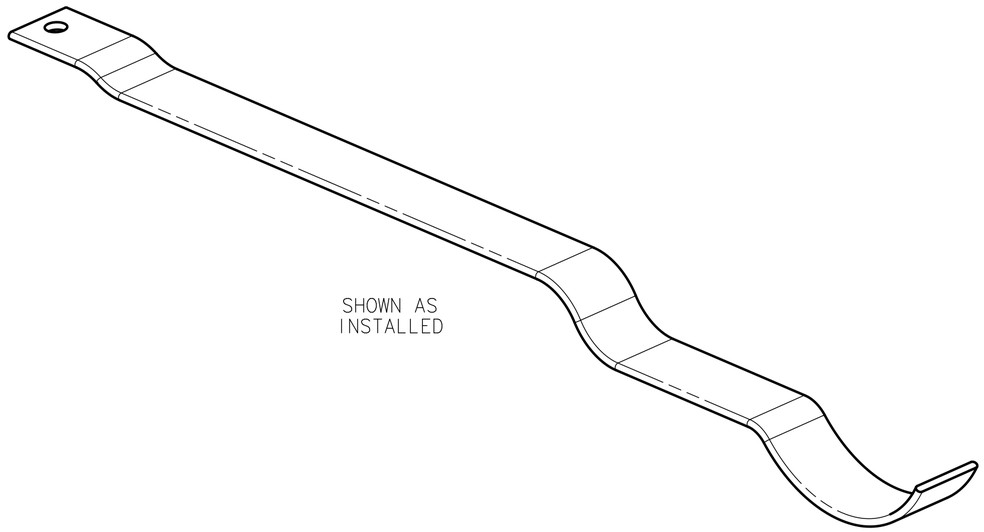

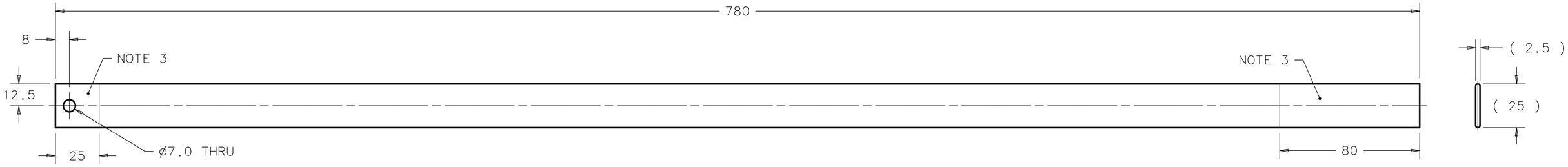

NOTES (UNLESS OTHERWISE SPECIFIED):

1. PART MUST BE FREE OF DIRT, GREASE, OIL AND CHIPS.
2. COPPER BRAID-FTCB15-40; P/N 557290
   ERICO INC. SOLON, OH 1-800-497-4304.
3. SOLDER REGION. APPLY SOLDER TO BOTH SIDES
   PRIOR TO DRILLING THRU HOLE.

NEXT ASSY	USED ON
-	899075

APPLICATION

FINISH: N/A

MATERIAL: COPPER BRAID NOTE 2

UNLESS OTHERWISE SPECIFIED:
DIMENSIONS ARE IN MILLIMETERS
INTERPRET DIM PER ASME Y14.5M-1994
BREAK ALL SHARP EDGES .75 MAX.
ALL MACH. SURFACES 3.2 MAX.

TOLERANCES: X ± 2, .X ± 0.8, .XX ± 0.13, ANGLE ± 1°

THIRD ANGLE PROJECTION

DRAWN BY: V. MARTINEZ	DATE: 30NOV09	
CHECKED BY: C.GRIMM	DATE: 25JAN10	
ENGINEERED BY: Y.ORLOV	DATE: 26JAN10	
DATABASE: DESY EDMS	TEAM/GROUP	
CAD: I-DEAS	SOLID MODEL NO.: D00000001283532	

FERMI NATIONAL ACCELERATOR LABORATORY
UNITED STATES DEPARTMENT OF ENERGY
P.O. BOX 500, BATAVIA, IL 60510-0500

TITLE: 1.3 GHz CRYOMODULE COOLING STRAPS BRAID_HOM_2

SIZE	CAGE CODE	DWG NO.	REV
A2	0U5R6	D00000000899065	B

SCALE 5:8 | DO NOT SCALE DWG | SHEET 1 OF 1

REVISION HISTORY CAD MAINTAINED. CHANGES SHALL BE INCORPORATED BY THE DESIGN ACTIVITY.				
ZONE	REV	DESCRIPTION	DATE	APPROVED
	A	INITIAL RELEASE: ILC-000044		
C6	B	ECO # ILC-000137 DIM 635, WAS 1000	16DEC10	Y. ORLOV

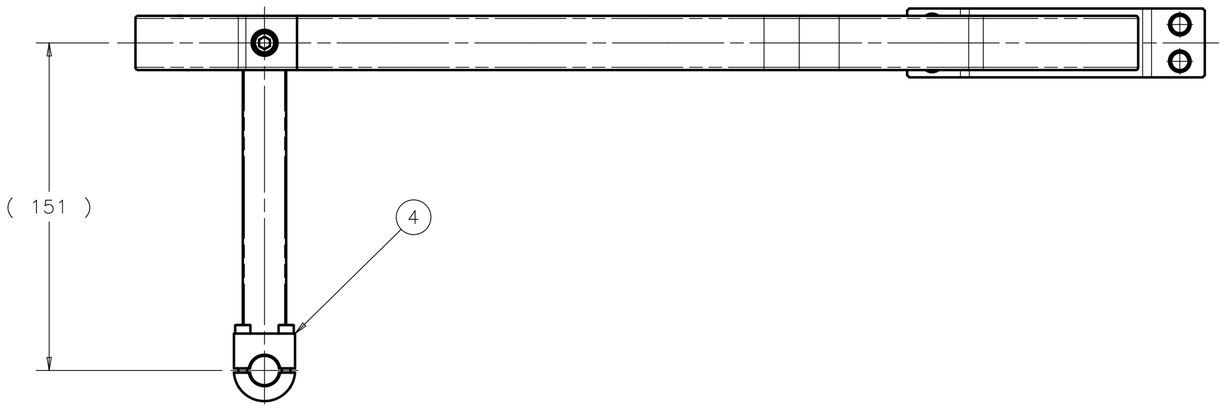

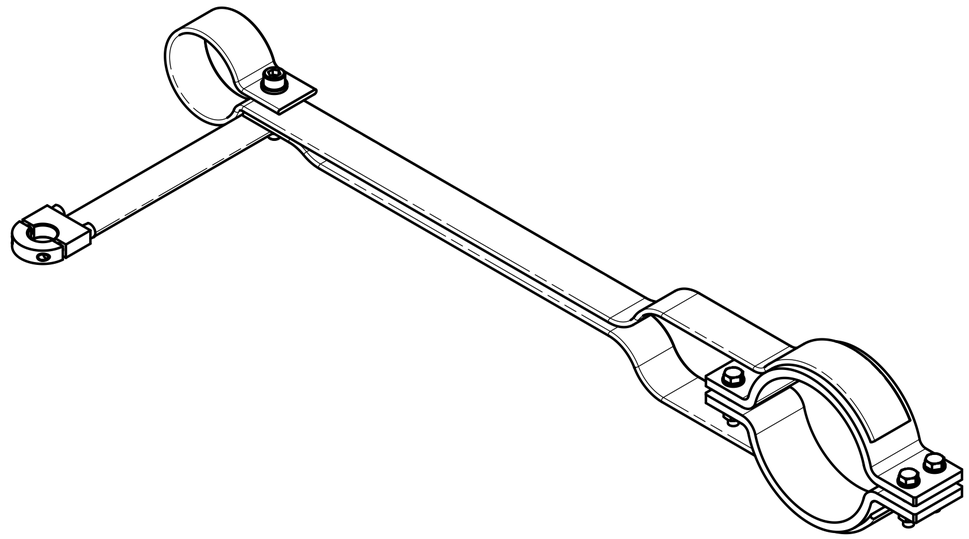

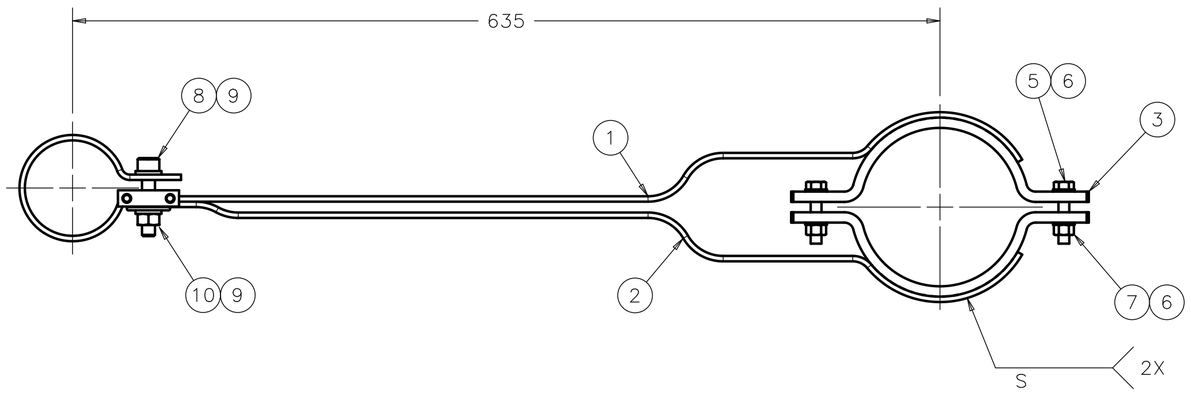

ITEM	P.I.N.	DESCRIPTION	QTY
10	COM'L	NUT-HEX M6, 316 S.S. McMASTER CARR P/N: 94150A345	1
9	COM'L	WASHER-PLAIN M6, 316 S.S. McMASTER CARR P/N: 90965A170	2
8	COM'L	SCREW-SHC M6 X 25 LNG, 316 S.S. McMASTER CARR P/N: 92290A330	1
7	COM'L	NUT-HEX M5, 316 S.S. McMASTER CARR P/N: 94150A340	4
6	COM'L	WASHER-PLAIN M5, 316 S.S. McMASTER CARR P/N: 90965A160	8
5	COM'L	SCREW-HEX HEAD M5 X 25 LNG, 316 S.S. McMASTER CARR P/N: 93635A172	4
4	899135	CLAMP HOM CONNECTOR ASSY	1
3	898185	CLAMP HEAT SINK	2
2	899065	BRAID HOM 2	1
1	899055	BRAID HOM 1	1

PARTS LIST

NOTES (UNLESS OTHERWISE SPECIFIED):

1. ASSEMBLY KIT MUST BE FREE OF DIRT, GREASE, OIL AND CHIPS.

NEXT ASSY	USED ON
-	-
APPLICATION	

FINISH: N/A

MATERIAL: SEE PARTS LIST

UNLESS OTHERWISE SPECIFIED:
DIMENSIONS ARE IN MILLIMETERS
INTERPRET DIM PER ASME Y14.5M-1994
BREAK ALL SHARP EDGES .75 MAX.
ALL MACH. SURFACES 3.2 MAX.

TOLERANCES: X ± 2, .X ± 0.8, .XX ± 0.13, ANGLE ± 1°

THIRD ANGLE PROJECTION

DRAWN BY V. MARTINEZ	DATE 30NOV09	
CHECKED BY C.GRIMM	DATE 25JAN10	
ENGINEERED BY Y.ORLOV	DATE 26JAN10	
DATABASE DESY EDMS	TEAM/GROUP	
CAD I-DEAS	SOLID MODEL NO. D00000000813353	

FERMI NATIONAL ACCELERATOR LABORATORY
UNITED STATES DEPARTMENT OF ENERGY
P.O. BOX 500, BATAVIA, IL 60510-0500

TITLE
1.3 GHz CRYOMODULE
COOLING STRAPS
BRAIDS_HOM_1_ASSY

SIZE	CAGE CODE	DWG NO.	REV
A2	0U5R6	D00000000899075	B

SCALE 1:2 | DO NOT SCALE DWG | SHEET 1 OF 1

REVISION HISTORY CAD MAINTAINED. CHANGES SHALL BE INCORPORATED BY THE DESIGN ACTIVITY.				
ZONE	REV	DESCRIPTION	DATE	APPROVED
	A	INITIAL RELEASE: ILC-000044		
C6	B	ECO # ILC-000137 DIM 315, WAS 670	16DEC10	Y. ORLOV

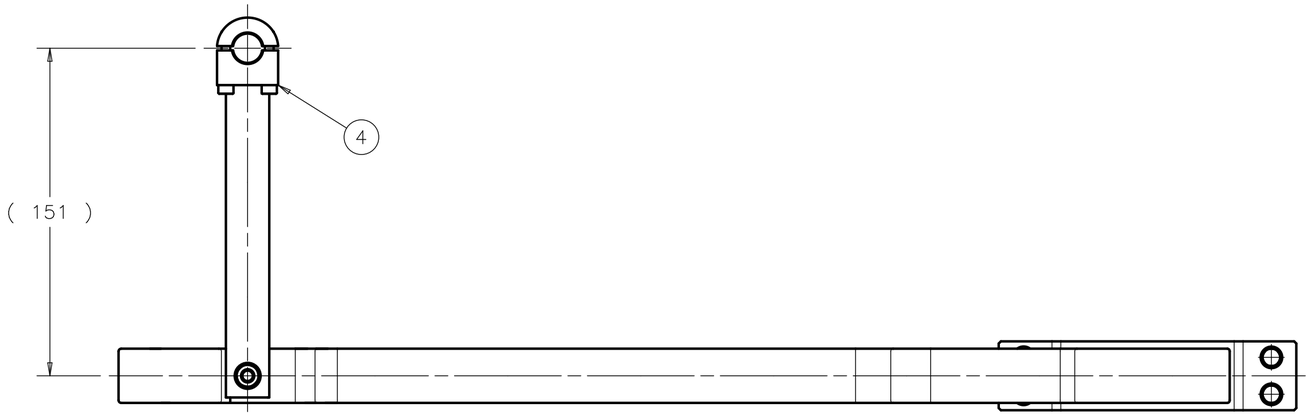

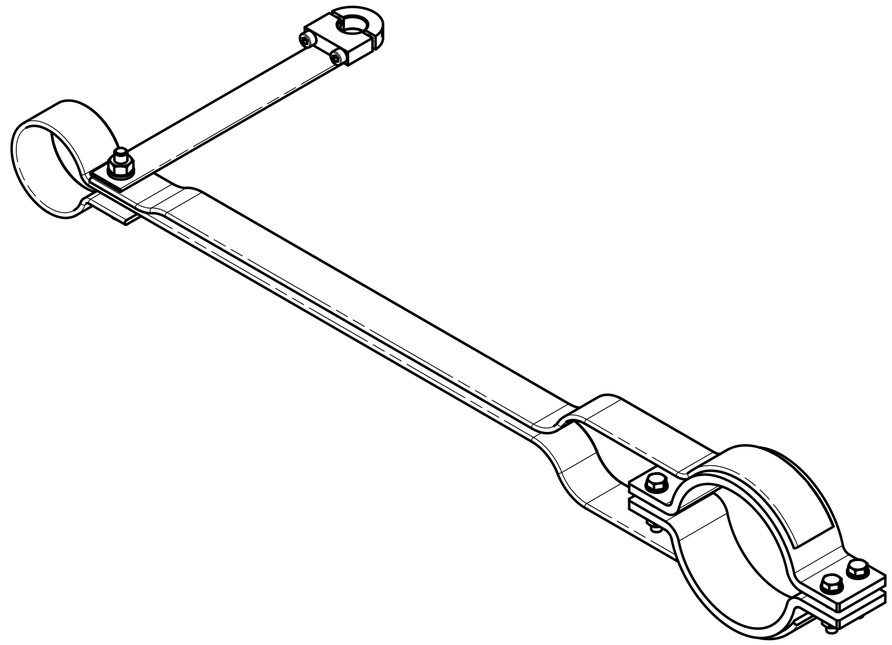

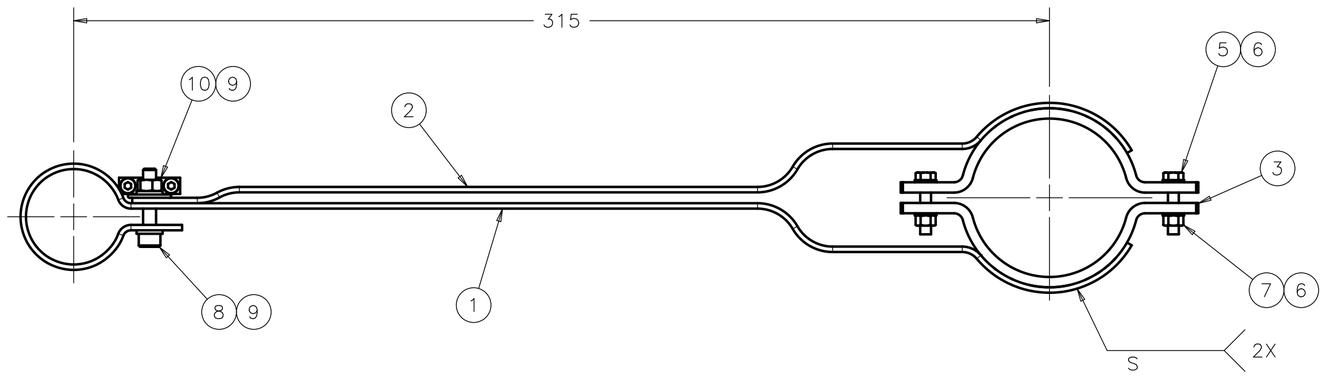

ITEM	P.I.N.	DESCRIPTION	QTY
10	COM'L	NUT-HEX M6, 316 S.S. McMASTER CARR P/N: 94150A345	1
9	COM'L	WASHER-PLAIN M6, 316 S.S. McMASTER CARR P/N: 90965A170	2
8	COM'L	SCREW-SHC M6 X 25 LNG, 316 S.S. McMASTER CARR P/N: 92290A330	1
7	COM'L	NUT-HEX M5, 316 S.S. McMASTER CARR P/N: 94150A340	4
6	COM'L	WASHER-PLAIN M5, 316 S.S. McMASTER CARR P/N: 90965A160	8
5	COM'L	SCREW-HEX HEAD M5 X 25 LNG, 316 S.S. McMASTER CARR P/N: 93635A172	4
4	899135	CLAMP HOM CONNECTOR ASSY	1
3	898185	CLAMP HEAT SINK	2
2	899125	BRAID HOM2 SHORT	1
1	899115	BRAID HOM2 LONG	1

PARTS LIST

NOTES (UNLESS OTHERWISE SPECIFIED):

1. ASSEMBLY MUST BE FREE OF DIRT, GREASE, OIL AND CHIPS.

NEXT ASSY	USED ON
-	-

APPLICATION

FINISH: N/A

MATERIAL: SEE PARTS LIST

UNLESS OTHERWISE SPECIFIED:
DIMENSIONS ARE IN MILLIMETERS
INTERPRET DIM PER ASME Y14.5M-1994
BREAK ALL SHARP EDGES .75 MAX.
ALL MACH. SURFACES 3.2 MAX.

TOLERANCES: X ± 2, .X ± 0.8, .XX ± 0.13, ANGLE ± 1°

THIRD ANGLE PROJECTION

DRAWN BY: V. MARTINEZ	DATE: 01DEC09		
CHECKED BY: C.GRIMM	DATE: 25JAN10		
ENGINEERED BY: Y.ORLOV	DATE: 26JAN10		
DATABASE: DESY EDMS	TEAM/GROUP		
CAD: I-DEAS	SOLID MODEL NO.: D00000000813363		

FERMI NATIONAL ACCELERATOR LABORATORY
UNITED STATES DEPARTMENT OF ENERGY
P.O. BOX 500, BATAVIA, IL 60510-0500

TITLE: 1.3 GHz CRYOMODULE COOLING STRAPS BRAIDS_HOM_2_ASSY

SIZE	CAGE CODE	DWG NO.	REV
A2	0U5R6	D00000000899105	B

SCALE 1:2 | DO NOT SCALE DWG | SHEET 1 OF 1

REVISION HISTORY

CAD MAINTAINED. CHANGES SHALL BE INCORPORATED BY THE DESIGN ACTIVITY.

ZONE	REV	DESCRIPTION	DATE	APPROVED
	A	INITIAL RELEASE: ILC-000044		
C5	B	ECO # ILC-000137 DIM 530, WAS 780	16DEC10	Y. ORLOV

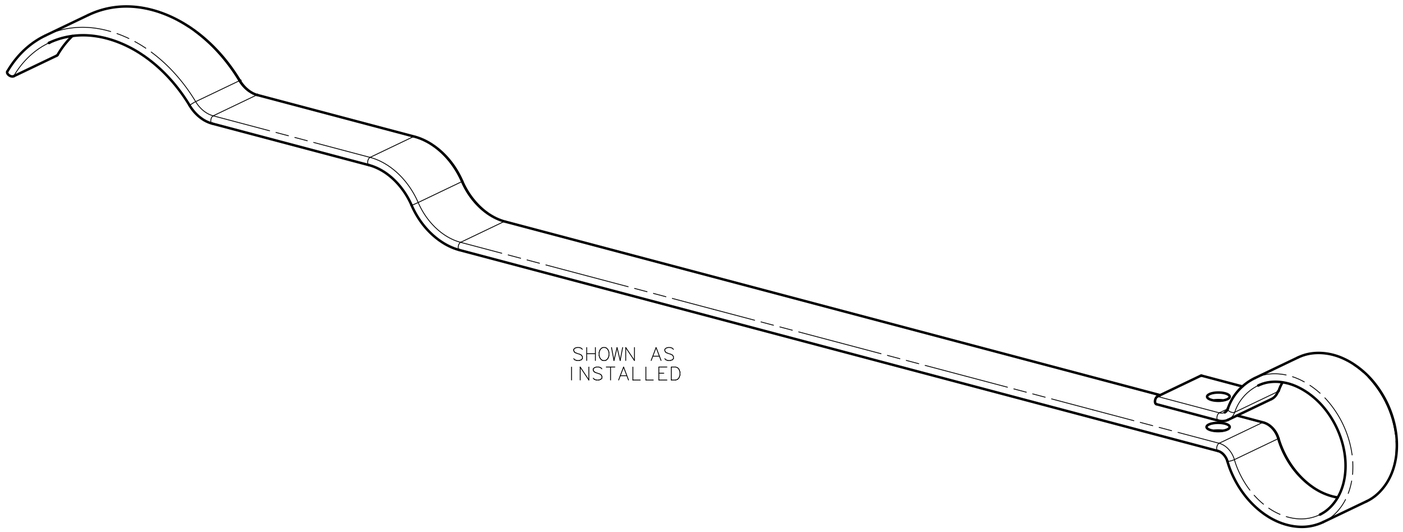

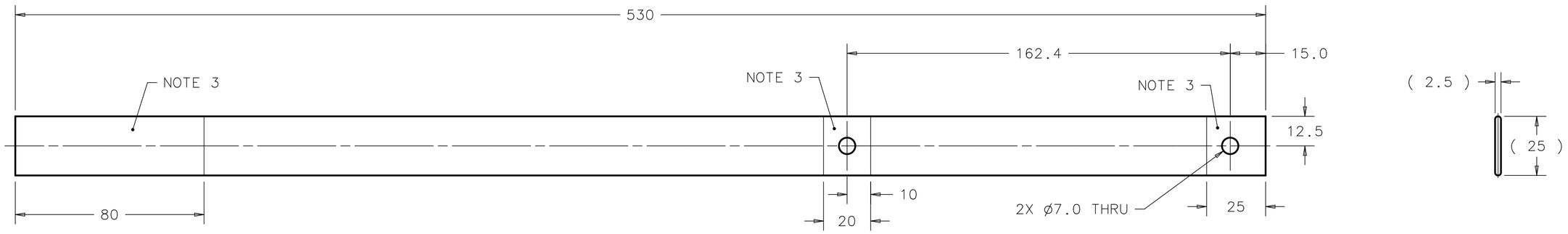

NOTES (UNLESS OTHERWISE SPECIFIED):

1. PART MUST BE FREE OF DIRT, GREASE, OIL AND CHIPS.
2. COPPER BRAID-FTCB15-40; P/N 557290
   ERICO INC. SOLON, OH 1-800-497-4304.
3. SOLDER REGION. APPLY SOLDER ON BOTH SIDES
   PRIOR TO DRILLING THRU HOLES.

NEXT ASSY	USED ON
-	899105

APPLICATION

FINISH: N/A

MATERIAL: COPPER BRAID NOTE 2

UNLESS OTHERWISE SPECIFIED:
DIMENSIONS ARE IN MILLIMETERS
INTERPRET DIM PER ASME Y14.5M-1994
BREAK ALL SHARP EDGES .75 MAX.
ALL MACH. SURFACES 3.2 MAX.

TOLERANCES: X ± 2, .X ± 0.8, .XX ± 0.13, ANGLE ± 1°

THIRD ANGLE PROJECTION

DRAWN BY: V. MARTINEZ	DATE: 01DEC09	
CHECKED BY: C.GRIMM	DATE: 26JAN10	
ENGINEERED BY: Y.ORLOV	DATE: 26JAN10	
DATABASE: DESY EDMS	TEAM/GROUP	
CAD: I-DEAS	SOLID MODEL NO.: D00000001279312	

FERMI NATIONAL ACCELERATOR LABORATORY
UNITED STATES DEPARTMENT OF ENERGY
P.O. BOX 500, BATAVIA, IL 60510-0500

TITLE: 1.3 GHz CRYOMODULE COOLING STRAPS BRAID_HOM2_LONG

SIZE	CAGE CODE	DWG NO.	REV
A2	0U5R6	D00000000899115	B

SCALE 3:4 | DO NOT SCALE DWG | SHEET 1 OF 1

REVISION HISTORY

CAD MAINTAINED. CHANGES SHALL BE INCORPORATED BY THE DESIGN ACTIVITY.

ZONE	REV	DESCRIPTION	DATE	APPROVED
	A	INITIAL RELEASE: ILC-000044		
D5	B	ECO # ILC-000137 DIM 390, WAS 640	16DE10	Y. ORLOV

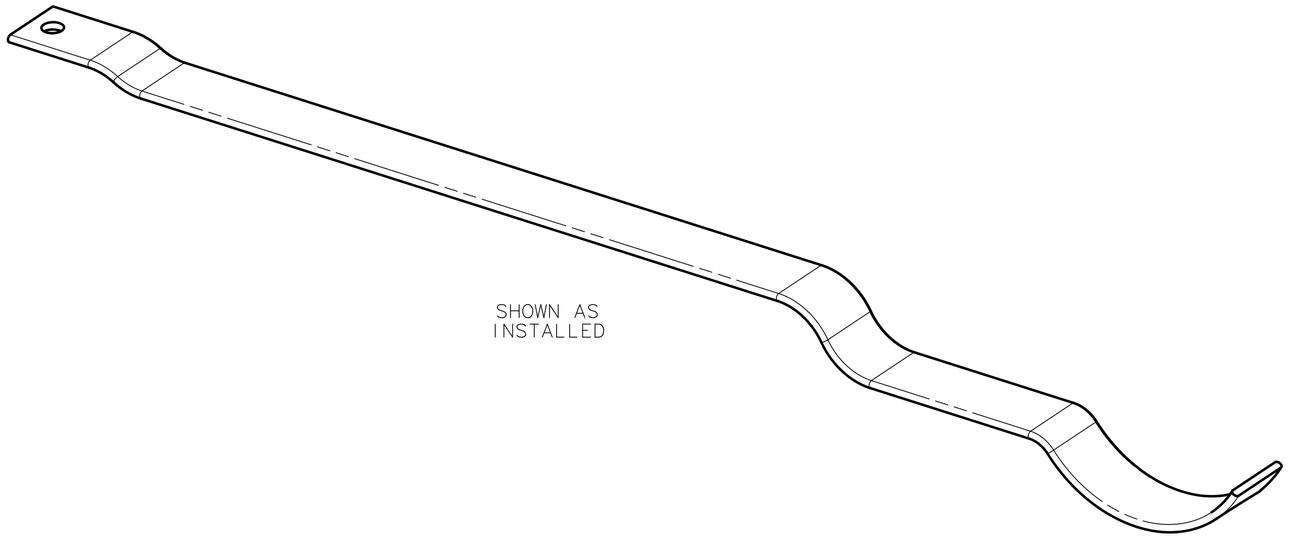

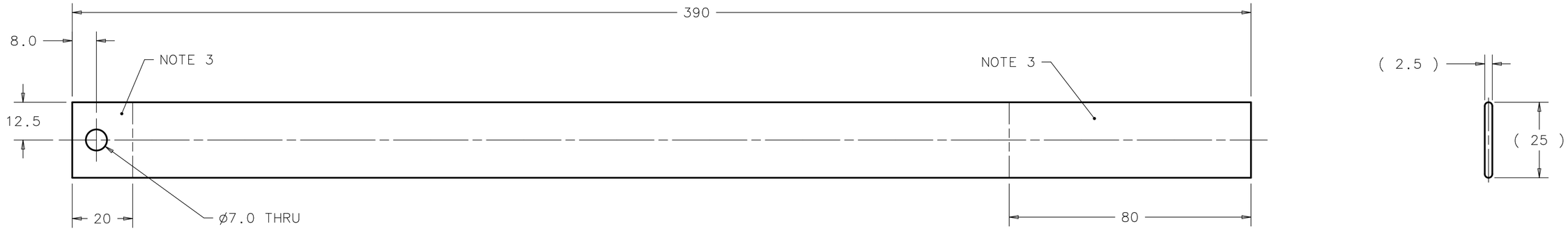

NOTES (UNLESS OTHERWISE SPECIFIED):

1. PART MUST BE FREE OF DIRT, GREASE, OIL AND CHIPS.
2. COPPER BRAID-FTCB15-40; P/N 557290
   ERICO INC. SOLON, OH 1-800-497-4304
3. SOLDER REGION. APPLY SOLDER ON BOTH SIDES
   PRIOR TO DRILLING THRU HOLE.

NEXT ASSY	USED ON
-	899105

APPLICATION

FINISH: N/A

MATERIAL: COPPER BRAID NOTE 2

UNLESS OTHERWISE SPECIFIED:
DIMENSIONS ARE IN MILLIMETERS
INTERPRET DIM PER ASME Y14.5M-1994
BREAK ALL SHARP EDGES .75 MAX.
ALL MACH. SURFACES 3.2 MAX.

TOLERANCES: X ± 2, .X ± 0.8, .XX ± 0.13, ANGLE ± 1°

THIRD ANGLE PROJECTION

DRAWN BY: V. MARTINEZ	DATE: 01DEC09	
CHECKED BY: C.GRIMM	DATE: 25JAN10	
ENGINEERED BY: Y.ORLOV	DATE: 26JAN10	
DATABASE: DESY EDMS	TEAM/GROUP	
CAD: I-DEAS	SOLID MODEL NO.: D00000001285622	

FERMI NATIONAL ACCELERATOR LABORATORY
UNITED STATES DEPARTMENT OF ENERGY
P.O. BOX 500, BATAVIA, IL 60510-0500

TITLE: 1.3 GHz CRYOMODULE COOLING STRAPS BRAID_HOM2_SHORT

SIZE	CAGE CODE	DWG NO.	REV
A2	0U5R6	D00000000899125	B

SCALE 3:4 | DO NOT SCALE DWG | SHEET 1 OF 1

NOTES (UNLESS OTHERWISE SPECIFIED):

1. ASSEMBLY MUST BE FREE OF DIRT, GREASE, OIL AND CHIPS.

REVISION HISTORY

CAD MAINTAINED. CHANGES SHALL BE INCORPORATED BY THE DESIGN ACTIVITY.

ZONE	REV	DESCRIPTION	DATE	APPROVED
	A	INITIAL RELEASE: ILC-000044		

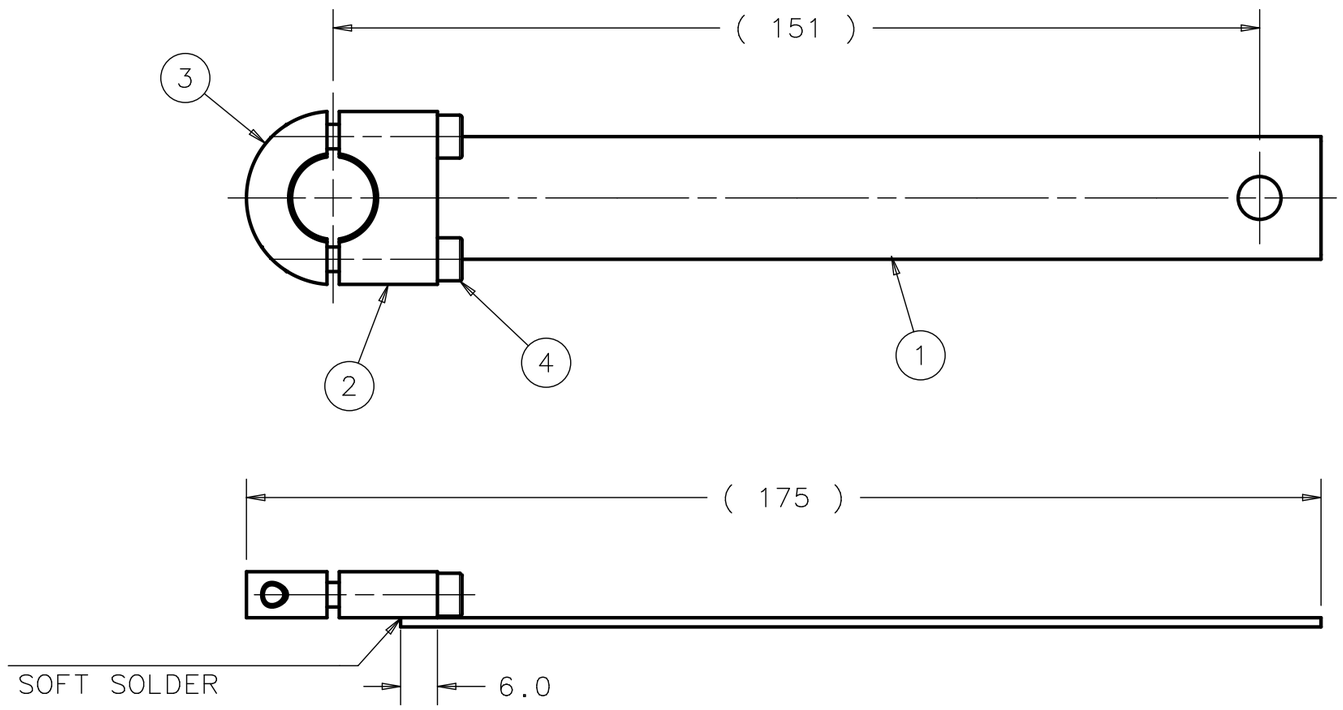

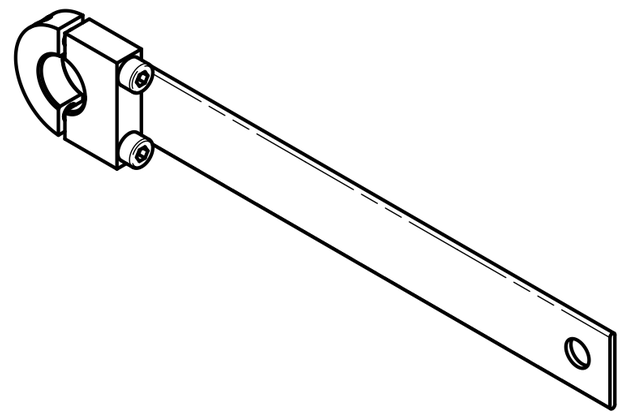

ITEM	P.I.N.	DESCRIPTION	QTY
4	COM'L	SCREW-SHC M4 X 25 LG, 316 S.S. MCMASTER CARR P/N: 92290A176	2
3	897855	HOM CLAMP-UPPER HALF	1
2	897845	HOM CLAMP-LOWER HALF	1
1	898435	BRAID HOM CONNECTOR	1

PARTS LIST

NEXT ASSY	USED ON
-	899105
-	899075

APPLICATION

FINISH: N/A

UNLESS OTHERWISE SPECIFIED:
DIMENSIONS ARE IN MILLIMETERS
INTERPRET DIM PER ASME Y14.5M-1994
BREAK ALL SHARP EDGES .75 MAX.
ALL MACH. SURFACES 3.2 MAX.

MATERIAL: SEE PARTS LIST

TOLERANCES: X ± 2, .X ± 0.8, .XX ± 0.13, ANGLE ± 1°

THIRD ANGLE PROJECTION

DRAWN BY V. MARTINEZ	DATE 25NOV09		
CHECKED BY C.GRIMM	DATE 25JAN10		
ENGINEERED BY Y.ORLOV	DATE 26JAN10		
DATABASE DESY EDMS	TEAM/GROUP		
CAD I-DEAS	SOLID MODEL NO. D00000000814013		

FERMI NATIONAL ACCELERATOR LABORATORY
UNITED STATES DEPARTMENT OF ENERGY
P.O. BOX 500, BATAVIA, IL 60510-0500

TITLE: 1.3 GHz CRYOMODULE COOLING STRAPS CLAMP_HOM_CONNECTOR_ASSY

SIZE	CAGE CODE	DWG NO.	REV
A3	0U5R6	D00000000899135	A

SCALE 1:1 | DO NOT SCALE DWG | SHEET 1 OF 1

Created: 12:49:12 on 26-01-10 (D-M-Y) By: victormm State: 1-INITIAL

REVISION HISTORY CAD MAINTAINED. CHANGES SHALL BE INCORPORATED BY THE DESIGN ACTIVITY.				
ZONE	REV	DESCRIPTION	DATE	APPROVED
	A	INITIAL RELEASE: ILC-000044		

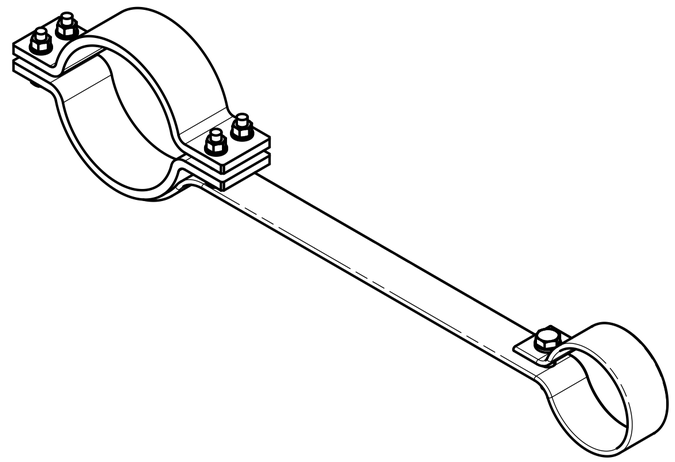

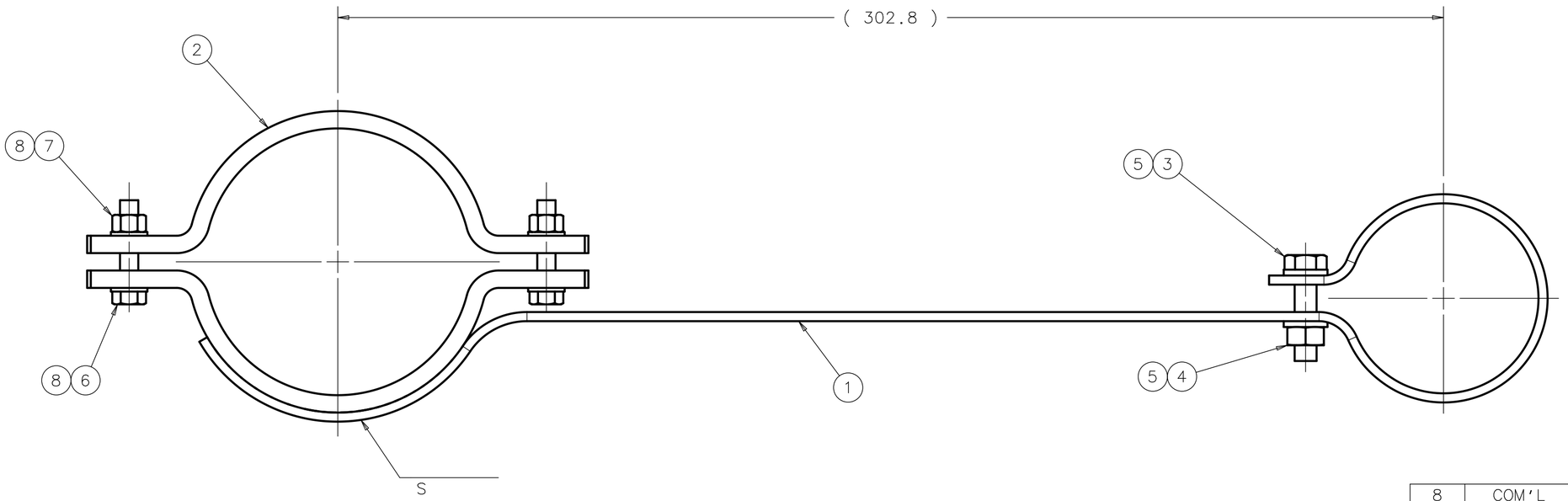

ITEM	P.I.N.	DESCRIPTION	QTY
8	COM'L	WASHER-PLAIN M5, 316 S.S. McMASTER P/N: 90965A160	8
7	COM'L	NUT-HEX M5, 316 S.S. McMASTER P/N: 94150A340	4
6	COM'L	SCREW-HEX HEAD M5 X 25 LG, 316 S.S. McMASTER P/N: 93635A172	4
5	COM'L	WASHER-PLAIN M6, 316 S.S. McMASTER P/N: 90965A170	2
4	COM'L	NUT-HEX M6, 316 S.S. McMASTER P/N: 94150A345	1
3	COM'L	SCREW-HEX HEAD M6 X 25 LG, 316 S.S. McMASTER P/N: 93635A214	1
2	898185	CLAMP HEAT SINK	2
1	898125	BRAID TUNER-MOTOR	1

PARTS LIST

NOTES (UNLESS OTHERWISE SPECIFIED):

1. ASSEMBLY MUST BE FREE OF DIRT, GREASE, OIL AND CHIPS.

-	-
NEXT ASSY	USED ON
APPLICATION	

FINISH: N/A

MATERIAL: SEE PARTS LIST

UNLESS OTHERWISE SPECIFIED:
DIMENSIONS ARE IN MILLIMETERS
INTERPRET DIM PER ASME Y14.5M-1994
BREAK ALL SHARP EDGES .75 MAX.
ALL MACH. SURFACES 3.2 / MAX.

TOLERANCES: X ± 2, .X ± 0.8, .XX ± 0.13, ANGLE ± 1°

THIRD ANGLE PROJECTION

DRAWN BY V. MARTINEZ	DATE 25NOV09		
CHECKED BY C.GRIMM	DATE 25JAN10		
ENGINEERED BY Y.ORLOV	DATE 26JAN10		
DATABASE DESY EDMS	TEAM/GROUP		
CAD I-DEAS	SOLID MODEL NO. D00000000812733		

FERMI NATIONAL ACCELERATOR LABORATORY
UNITED STATES DEPARTMENT OF ENERGY
P.O. BOX 500, BATAVIA, IL 60510-0500

TITLE: 1.3 GHz CRYOMODULE COOLING STRAPS BRAID_TUNER-MOTOR_ASSY

SIZE	CAGE CODE	DWG NO.	REV
A2	0U5R6	D00000000899145	A

SCALE 1:1 | DO NOT SCALE DWG | SHEET 1 OF 1

REVISION HISTORY CAD MAINTAINED. CHANGES SHALL BE INCORPORATED BY THE DESIGN ACTIVITY.				
ZONE	REV	DESCRIPTION	DATE	APPROVED
	A	INITIAL RELEASE ER # ILC-000050		

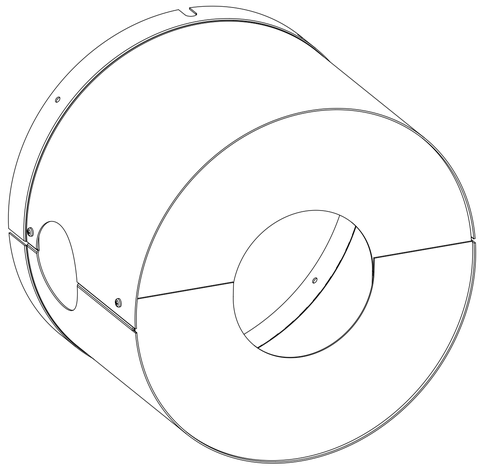

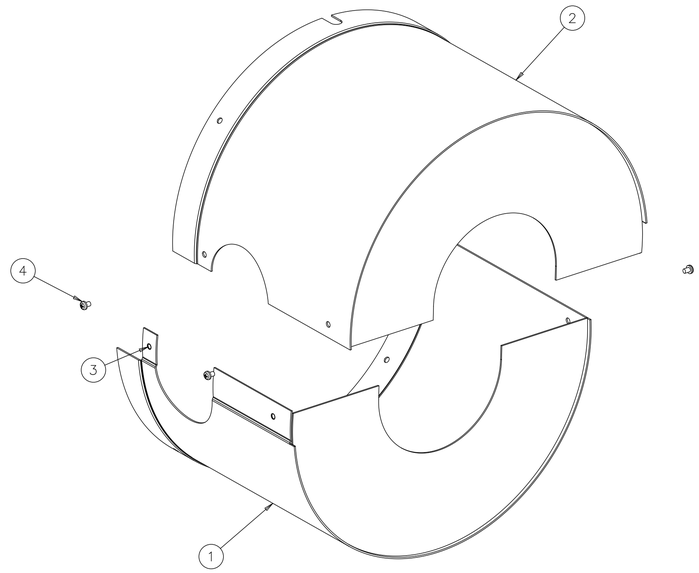

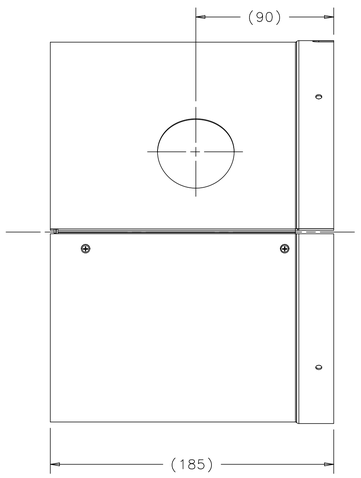

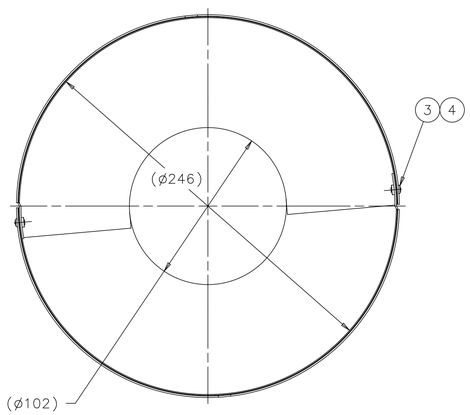

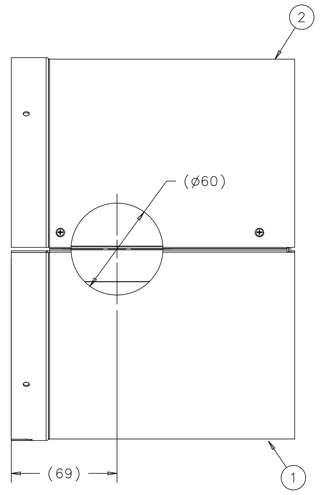

ITEM	P.I.N.	DESCRIPTION	QTY
4	COM'L	PAN HEAD SCREW M3 X 4, 316L S.S.	5
3	COM'L	CLINCH CAPTIVE NUT M3, 316L S.S.	5
2	902945	SHIELD_CAVITY-CORRECTOR-1_WLDMT	1
1	902935	SHIELD_CAVITY-CORRECTOR-2_WLDMT	1

PARTS LIST

NOTES (UNLESS OTHERWISE SPECIFIED):

1. ASSEMBLY MUST BE FREE OF DIRT, GREASE, OIL AND CHIPS.
2. VENDOR SHALL SUPPLY THE PART SUFFICIENTLY PACKAGED TO PROTECT THE FINISH AND INTEGRITY DURING SHIPMENT AND STORAGE. THE PACKAGE SHALL BE PROMINENTLY MARKED WITH THE PART NUMBER AND REVISION LEVEL.
3. VENDOR SHALL FOLLOW FERMILAB ENGINEERING SPECIFICATION 5500-ES-371041 WHEN COSTING, FABRICATING, PACKING AND SHIPPING ALL SHIELD PARTS AND SHIELD ASSEMBLIES.

CRYOMODULE	COLDMASS
NEXT ASSY	USED ON
APPLICATION	

FINISH: NOTE 3

MATERIAL: SEE PART LIST

UNLESS OTHERWISE SPECIFIED:
DIMENSIONS ARE IN MILLIMETERS
INTERPRET DIM PER ASME Y14.5M-1994
BREAK ALL SHARP EDGES 0.75 MAX.
ALL MACH. SURFACES 3.2 MAX.

TOLERANCES: X ± - ; .X ± 0.8 ; .XX ± - ; ANGLE ± -

THIRD ANGLE PROJECTION

DRAWN BY B. SCHMITZ	DATE 25JAN10	
CHECKED BY C.GRIMM	DATE 05FEB10	
ENGINEERED BY Y.ORLOV	DATE 05FEB10	
DATABASE DESY EDMS	TEAM/GROUP T4CM CRYOMODULE	
CAD I-DEAS	SOLID MODEL NO. D00000000817403	

FERMI NATIONAL ACCELERATOR LABORATORY
UNITED STATES DEPARTMENT OF ENERGY
P.O. BOX 500, BATAVIA, IL 60510-0500

TITLE
1.3 GHz UNIFIED CRYOMODULE HELIUM VESSEL SHIELD_CAVITY-MAGNET-1_ASSY

SIZE	CAGE CODE	DWG NO.	REV
A1	0U5R6	D00000000902125	A

SCALE 1:2 | DO NOT SCALE DRAWING | SHEET 1 OF 1

REVISION HISTORY CAD MAINTAINED. CHANGES SHALL BE INCORPORATED BY THE DESIGN ACTIVITY.				
ZONE	REV	DESCRIPTION	DATE	APPROVED
	A	INITIAL RELEASE ER # ILC-000050		

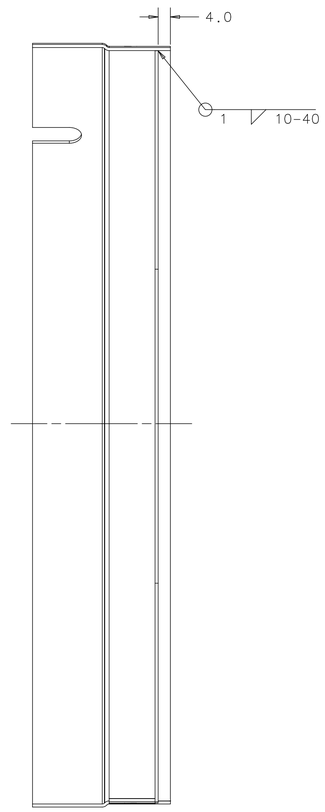

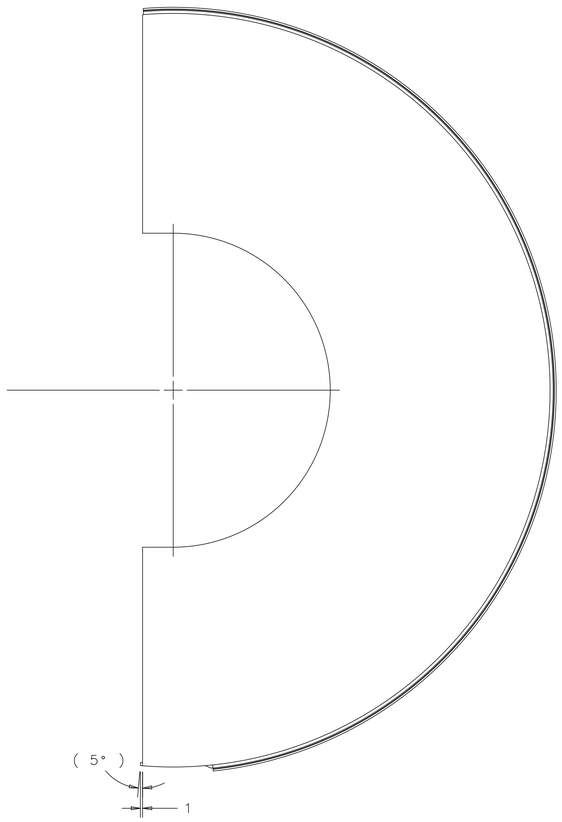

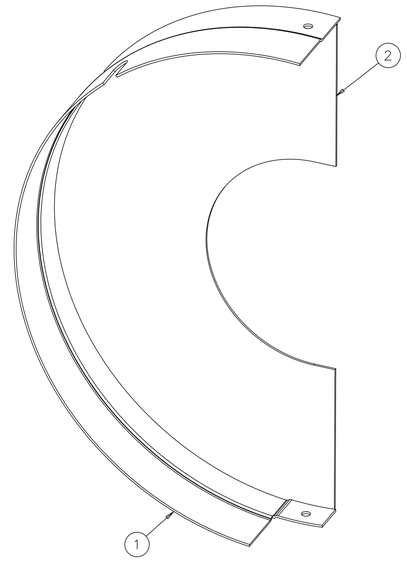

NOTES (UNLESS OTHERWISE SPECIFIED):

1. WELDMENT MUST BE FREE OF DIRT, GREASE, OIL AND CHIPS.
2. WELDMENT TO BE FREE OF ALL SHARP EDGES, CORNERS, AND BURRS.
3. DIMENSIONS APPLY AFTER ALL FINISHING.
4. VENDOR SHALL FOLLOW FERMILAB ENGINEERING SPECIFICATION 5500-ES-371041 WHEN COSTING, FABRICATING, PACKING, AND SHIPPING ALL SHIELD PARTS AND SHIELD ASSEMBLIES.

-	898215
NEXT ASSY	USED ON
APPLICATION	

ITEM	P.I.N.	DESCRIPTION	QTY
2	902795	SHIELD INTER-3	1
1	898235	SHIELD CAVITY-VAT-2	1

PARTS LIST

FINISH: NOTE 4

MATERIAL: SEE PARTS LIST

UNLESS OTHERWISE SPECIFIED:
DIMENSIONS ARE IN MILLIMETERS
INTERPRET DIM PER ASME Y14.5M-1994
BREAK ALL SHARP EDGES .75 MAX.
ALL MACH. SURFACES 3.2 MAX.

TOLERANCES: X ± 1, .X ± 0.5, .XX ± -, ANGLE ± 1°

THIRD ANGLE PROJECTION

DRAWN BY: B. SCHMITZ	DATE: 20JAN10	
CHECKED BY: C. GRIMM	DATE: 5FEB10	
ENGINEERED BY: Y. ORLOV	DATE: 5FEB10	
DATABASE: DESY EDMS	TEAM/GROUP: T4CM	
CAD: I-DEAS	SOLID MODEL NO.: D00000000814073	

FERMI NATIONAL ACCELERATOR LABORATORY
UNITED STATES DEPARTMENT OF ENERGY
P.O. BOX 500, BATAVIA, IL 60510-0500

TITLE: 1.3 GHz UNIFIED CRYOMODULE HELIUM VESSEL SHIELD_CAVITY-VAT-2_WLDMT

SIZE	CAGE CODE	DWG NO.	REV
A1	0U5R6	D00000000902775	A

SCALE 1:1 | DO NOT SCALE DRAWING | SHEET 1 OF 1

Created: 14:07:10 on 05-02-10 (D-M-Y) By: kurnat State: 1-INITIAL

REVISION HISTORY CAD MAINTAINED. CHANGES SHALL BE INCORPORATED BY THE DESIGN ACTIVITY.				
ZONE	REV	DESCRIPTION	DATE	APPROVED
	A	INITIAL RELEASE ER # ILC-000050		

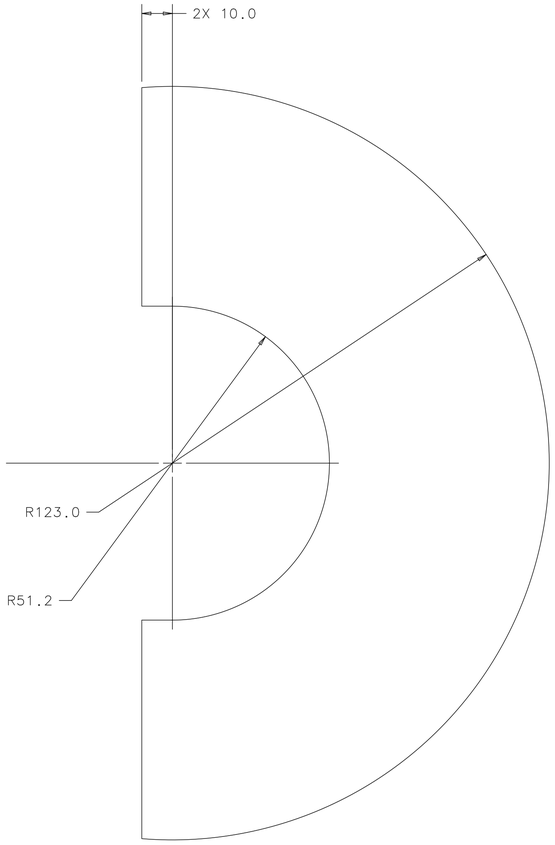

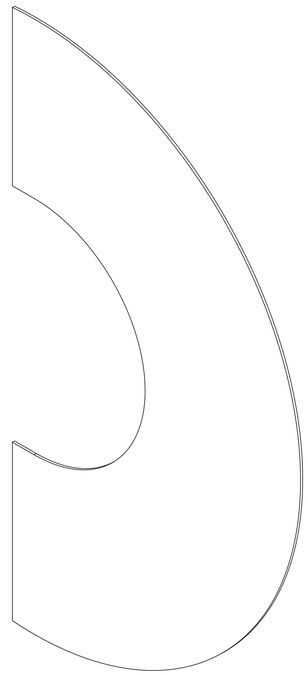

NOTES (UNLESS OTHERWISE SPECIFIED):

1. PART MUST BE FREE OF DIRT, GREASE, OIL AND CHIPS.
2. PART TO BE FREE OF ALL SHARP EDGES, CORNERS, AND BURRS.
3. VENDOR SHALL FOLLOW FERMILAB ENGINEERING SPECIFICATION 5500-ES-371041 WHEN COSTING, FABRICATING, PACKING, AND SHIPPING ALL SHIELDS AND SHIELD ASSEMBLIES.

NEXT ASSY	USED ON
-	902945
-	902935
902125	904365
902135	904355

APPLICATION

FINISH: N/A

MATERIAL: CRYOPERM 10, 1MM THICK

UNLESS OTHERWISE SPECIFIED:
DIMENSIONS ARE IN MILLIMETERS
INTERPRET DIM PER ASME Y14.5M-1994
BREAK ALL SHARP EDGES .75 MAX.
ALL MACH. SURFACES 3.2 MAX.

TOLERANCES: X ± - ; .X ± 0.5 ; .XX ± - ; ANGLE ± -

THIRD ANGLE PROJECTION

DRAWN BY: B. SCHMITZ	DATE: 20JAN10	
CHECKED BY: C.GRIMM	DATE: 05FEB10	
ENGINEERED BY: Y.ORLOV	DATE: 05FEB10	
DATABASE: DESY EDMS	TEAM/GROUP: T4CM	
CAD: I-DEAS	SOLID MODEL NO.: D00000001276392	

FERMI NATIONAL ACCELERATOR LABORATORY
UNITED STATES DEPARTMENT OF ENERGY
P.O. BOX 500, BATAVIA, IL 60510-0500

TITLE: 1.3 GHz UNIFIED CRYOMODULE HELIUM VESSEL SHIELD_INTER-3

SIZE	CAGE CODE	DWG NO.	REV
A1	0U5R6	D00000000902795	A

SCALE 1:1 | DO NOT SCALE DRAWING | SHEET 1 OF 1

Created: 15:34:00 on 05-02-10 (D-M-Y) By: victormm State: 1-INITIAL

REVISION HISTORY CAD MAINTAINED. CHANGES SHALL BE INCORPORATED BY THE DESIGN ACTIVITY.				
ZONE	REV	DESCRIPTION	DATE	APPROVED
	A	INITIAL RELEASE ER # ILC-000050		

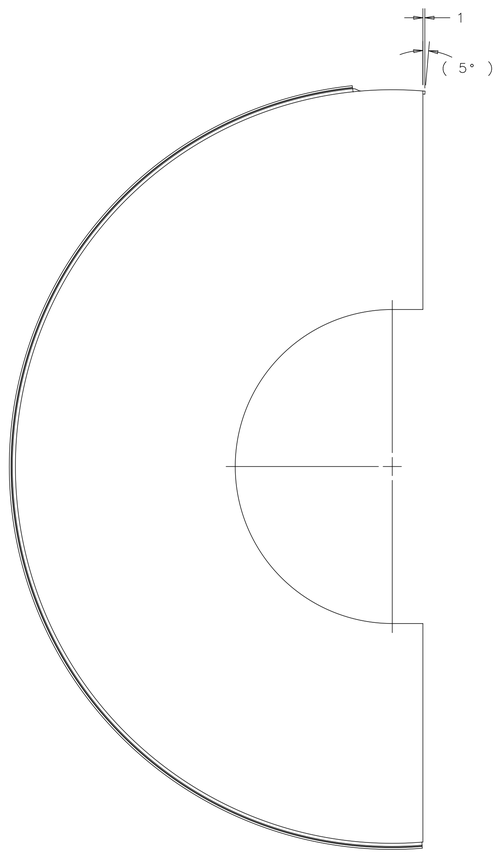

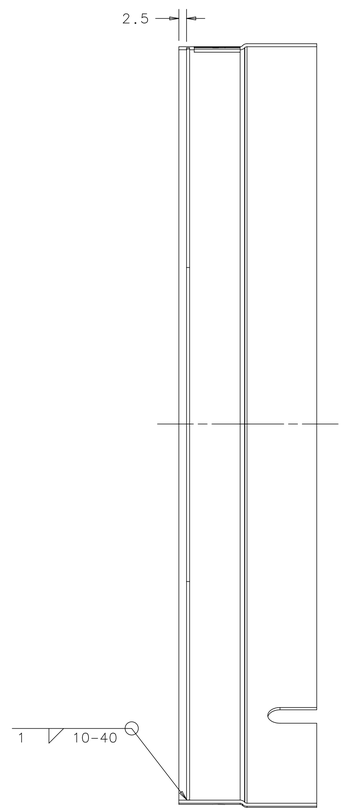

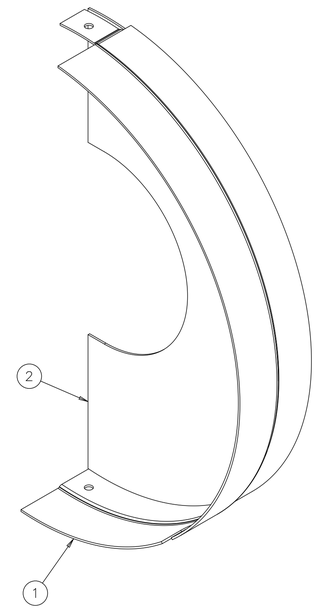

NOTES (UNLESS OTHERWISE SPECIFIED):

1. WELDMENT MUST BE FREE OF DIRT, GREASE, OIL AND CHIPS.
2. WELDMENT TO BE FREE OF ALL SHARP EDGES, CORNERS, AND BURRS.
3. DIMENSIONS APPLY AFTER ALL FINISHING.
4. VENDOR SHALL FOLLOW FERMILAB ENGINEERING SPECIFICATION 5500-ES-371041 WHEN COSTING, FABRICATING, PACKING, AND SHIPPING ALL SHIELD PARTS AND SHIELD ASSEMBLIES.

2	902795	SHIELD INTER-3	1
1	898225	SHIELD CAVITY-VAT-1	1
ITEM	P.I.N.	DESCRIPTION	QTY

PARTS LIST

-	898215
NEXT ASSY	USED ON

APPLICATION

FINISH: NA

MATERIAL: SEE PARTS LIST

UNLESS OTHERWISE SPECIFIED:
DIMENSIONS ARE IN MILLIMETERS
INTERPRET DIM PER ASME Y14.5M-1994
BREAK ALL SHARP EDGES .75 MAX.
ALL MACH. SURFACES 3.2 MAX.

TOLERANCES: X ± 1, .X ± 0.5, .XX ± -, ANGLE ± 1°

THIRD ANGLE PROJECTION

DRAWN BY B. SCHMITZ	DATE 20JAN10	
CHECKED BY C. GRIMM	DATE 5FEB10	
ENGINEERED BY Y. ORLOV	DATE 5FEB10	
DATABASE DESY EDMS	TEAM/GROUP T4CM	
CAD I-DEAS	SOLID MODEL NO. D00000000814083	

FERMI NATIONAL ACCELERATOR LABORATORY
UNITED STATES DEPARTMENT OF ENERGY
P.O. BOX 500, BATAVIA, IL 60510-0500

TITLE
1.3 GHz UNIFIED CRYOMODULE HELIUM VESSEL SHIELD_CAVITY-VAT-1_WLDMT

SIZE	CAGE CODE	DWG NO.	REV
A1	0U5R6	D00000000902855	A

SCALE 1:1 | DO NOT SCALE DRAWING | SHEET 1 OF 1

Created: 14:07:48 on 05-02-10 (D-M-Y) By: kurnat State: 1-INITIAL

REVISION HISTORY CAD MAINTAINED. CHANGES SHALL BE INCORPORATED BY THE DESIGN ACTIVITY.				
ZONE	REV	DESCRIPTION	DATE	APPROVED
	A	INITIAL RELEASE ER # ILC-000050		

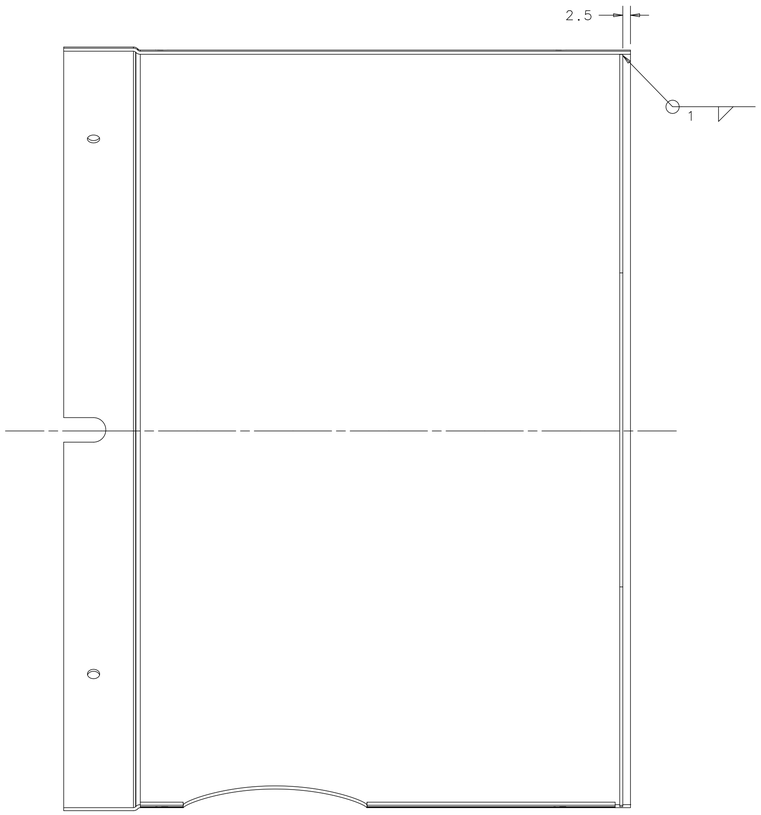

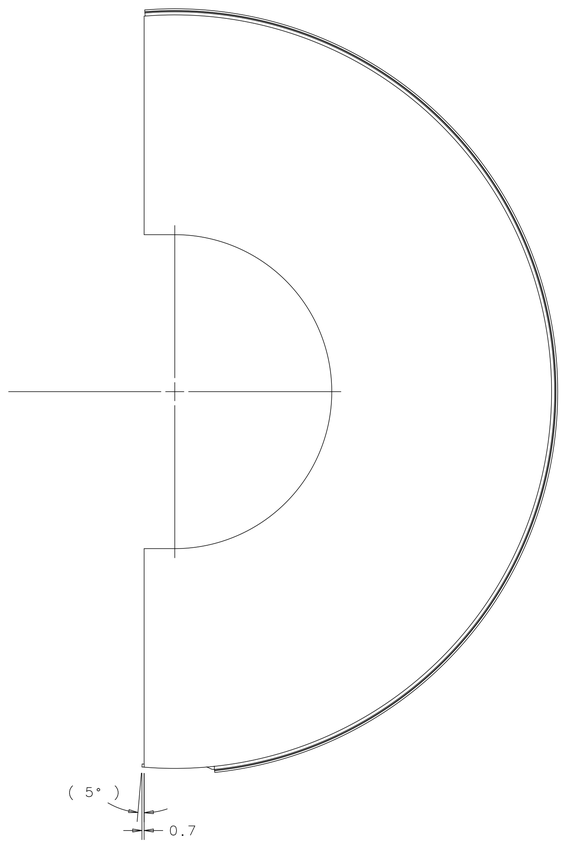

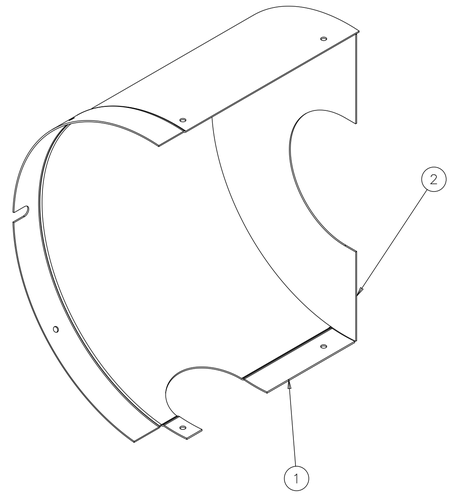

ITEM	P.I.N.	DESCRIPTION	QTY
2	902795	SHIELD INTER-3	1
1	898205	SHIELD CAVITY CORRECTOR-2	1

PARTS LIST

NOTES (UNLESS OTHERWISE SPECIFIED):

1. INTERIOR WELDS SHALL BE AS SMOOTH AS POSSIBLE.
2. WELDMENT MUST BE FREE OF DIRT, GREASE, OIL AND CHIPS.
3. WELDMENT TO BE FREE OF ALL SHARP EDGES, CORNERS, AND BURRS.
4. VENDOR SHALL FOLLOW FERMILAB ENGINEERING SPECIFICATION 5500-ES-371041 WHEN COSTING, FABRICATING, PACKING, AND SHIPPING ALL SHIELD PARTS AND SHIELD ASSEMBLIES.

NEXT ASSY	USED ON
-	902125

APPLICATION

FINISH: NOTE 4

MATERIAL: SEE PARTS LIST

UNLESS OTHERWISE SPECIFIED:
DIMENSIONS ARE IN MILLIMETERS
INTERPRET DIM PER ASME Y14.5M-1994
BREAK ALL SHARP EDGES .75 MAX.
ALL MACH. SURFACES 3.2 MAX.

TOLERANCES: X ± 1, .X ± 0.5, .XX ± -, ANGLE ± 1°

THIRD ANGLE PROJECTION

DRAWN BY B. SCHMITZ	DATE 22JAN10	
CHECKED BY C.GRIMM	DATE 05FEB10	
ENGINEERED BY Y.ORLOV	DATE 05FEB10	
DATABASE DESY EDMS	TEAM/GROUP T4CM	
CAD I-DEAS	SOLID MODEL NO. D00000000813233	

FERMI NATIONAL ACCELERATOR LABORATORY
UNITED STATES DEPARTMENT OF ENERGY
P.O. BOX 500, BATAVIA, IL 60510-0500

TITLE
1.3 GHz UNIFIED CRYOMODULE HELIUM VESSEL SHIELD_CAVITY-CORRECTOR-2_WLDMT

SIZE	CAGE CODE	DWG NO.	REV
A1	0U5R6	D00000000902935	A

SCALE 1:1 | DO NOT SCALE DRAWING | SHEET 1 OF 1

Created: 15:35:36 on 05-02-10 (D-M-Y) By: victormm State: 1-INITIAL

REVISION HISTORY CAD MAINTAINED. CHANGES SHALL BE INCORPORATED BY THE DESIGN ACTIVITY.				
ZONE	REV	DESCRIPTION	DATE	APPROVED
	A	INITIAL RELEASE ER # ILC-000050		

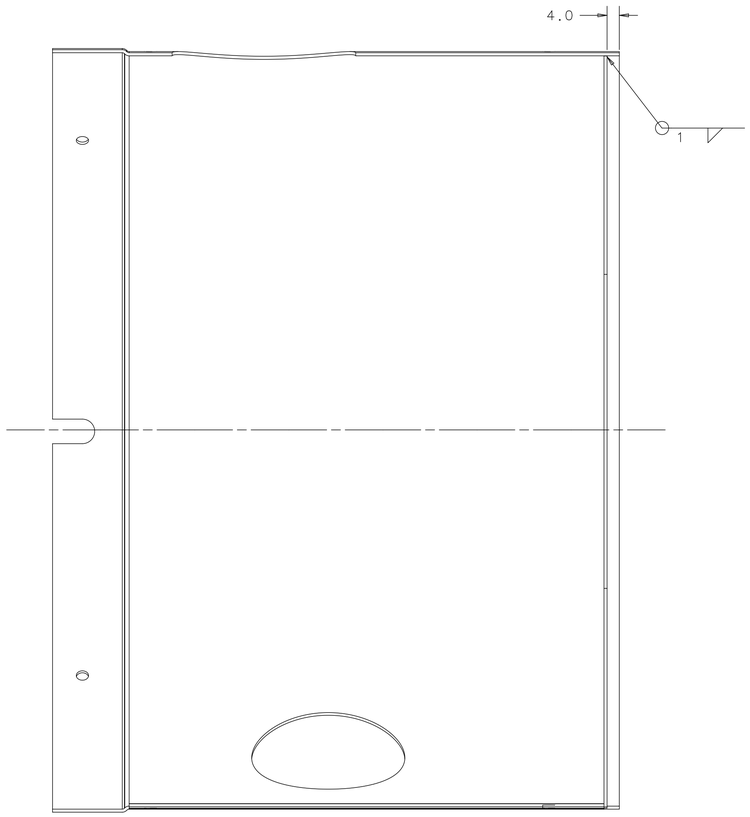

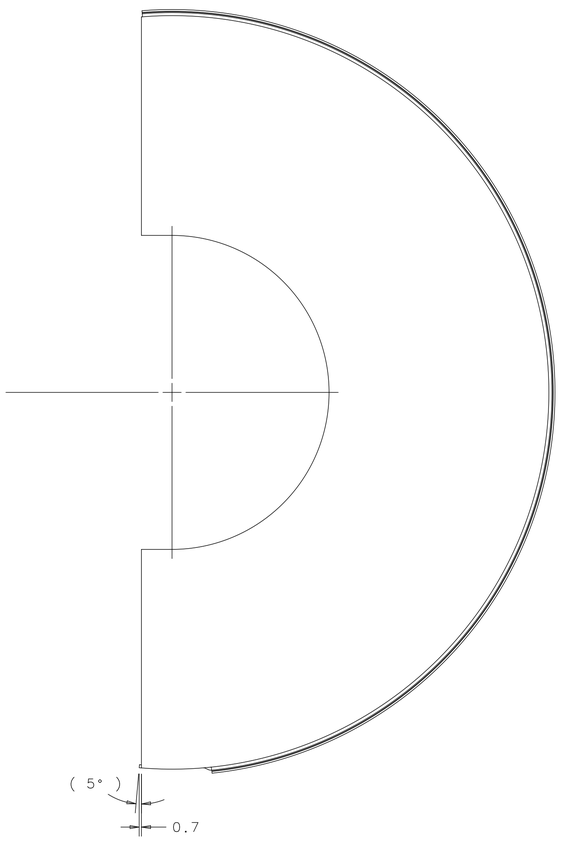

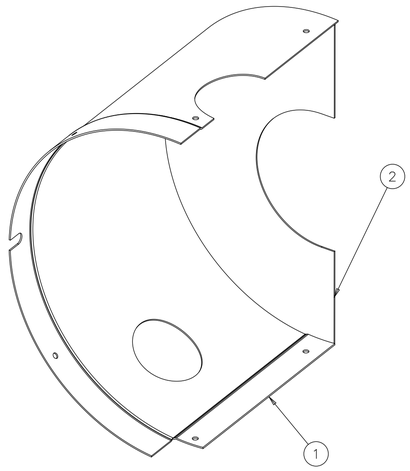

NOTES (UNLESS OTHERWISE SPECIFIED):

1. INTERIOR WELDS SHALL BE AS SMOOTH AS POSSIBLE.
2. WELDMENT MUST BE FREE OF DIRT, GREASE, OIL AND CHIPS.
3. WELDMENT TO BE FREE OF ALL SHARP EDGES, CORNERS, AND BURRS.
4. VENDOR SHALL FOLLOW FERMILAB ENGINEERING SPECIFICATION 5500-ES-371041 WHEN COSTING, FABRICATING, PACKING, AND SHIPPING ALL SHIELD PARTS, WELDMENTS, AND ASSEMBLIES.

ITEM	P.I.N.	DESCRIPTION	QTY
2	902795	SHIELD INTER-3	1
1	898195	SHIELD CAVITY CORRECTOR-1	1

PARTS LIST

NEXT ASSY	USED ON
-	902125

APPLICATION

FINISH: NOTE 4

MATERIAL: SEE PARTS LIST

UNLESS OTHERWISE SPECIFIED:
DIMENSIONS ARE IN MILLIMETERS
INTERPRET DIM PER ASME Y14.5M-1994
BREAK ALL SHARP EDGES MAX.
ALL MACH. SURFACES ▽ MAX.

TOLERANCES: X ± 1, .X ± 0.5, .XX ± -, ANGLE ± 1°

THIRD ANGLE PROJECTION

DRAWN BY: B. SCHMITZ	DATE: 22JAN10	
CHECKED BY: C.GRIMM	DATE: 05FEB10	
ENGINEERED BY: Y.ORLOV	DATE: 05FEB10	
DATABASE: DESY EDMS	TEAM/GROUP: T4CM	
CAD: I-DEAS	SOLID MODEL NO.: D00000000813243	

FERMI NATIONAL ACCELERATOR LABORATORY
UNITED STATES DEPARTMENT OF ENERGY
P.O. BOX 500, BATAVIA, IL 60510-0500

TITLE
1.3 GHz UNIFIED CRYOMODULE HELIUM VESSEL SHIELD_CAVITY-CORRECTOR-1_WLDMT

SIZE	CAGE CODE	DWG NO.	REV
A1	0U5R6	D00000000902945	A

SCALE 1:1 | DO NOT SCALE DRAWING | SHEET 1 OF 1

Created: 15:36:35 on 05-02-10 (D-M-Y) By: victormm State: 1-INITIAL