REV	DESCRIPTION	DRAWN	DATE
		APPROVED	DATE

NOTES (UNLESS OTHERWISE SPECIFIED):

1. ALL DIMENSION, UNLESS SPECIFIED, ARE IN ROOM TEMPERATURE.
2. ASSEMBLY PER FERMILAB ENGINEERING SPECIFICATION: 5520.000-ES-
3. CLEAN ALL WELDEBLE SURFACES BEFORE WELDING.
4. MAINTAIN A DIRT&GREASE-FREE WORK ENVIROMENT, KEEPS ALL PARTS AND ASSEMBLIES FREE OF DIRT, OIL AND CHEEPS.
5. FABRICATE ALL PIPING CONNECTION PER ASME B31.3 NORMAL FLUID SEVICE.
6. SEALING SURFACES MUST BE FREE OF SCRATCHES AND NICKS WITH NO RADIAL SCORING.
7. ITEMS 14 & 15 SHALL BE BUT WELDED TO EXISTING 80K NITROGEN LINE.
8. ALL CONTINUES WELDS TO BE LEAK TIGHT. NO LEAK SHALL BE DETECTABLE ON THE MOST SENSITIVE SCALE OF A HELIUM LEAK DETECTOR WITH A MINIMUM SENSITIVITY OF 10^{-9} ATM. CC/SEC.
10. PRESSURE TEST FOR 80K LINE IS REQUIRED, (?)
11. ITEMS 2, 3, & 4 EXIST WITHIN THE DESY ILC EDMS.

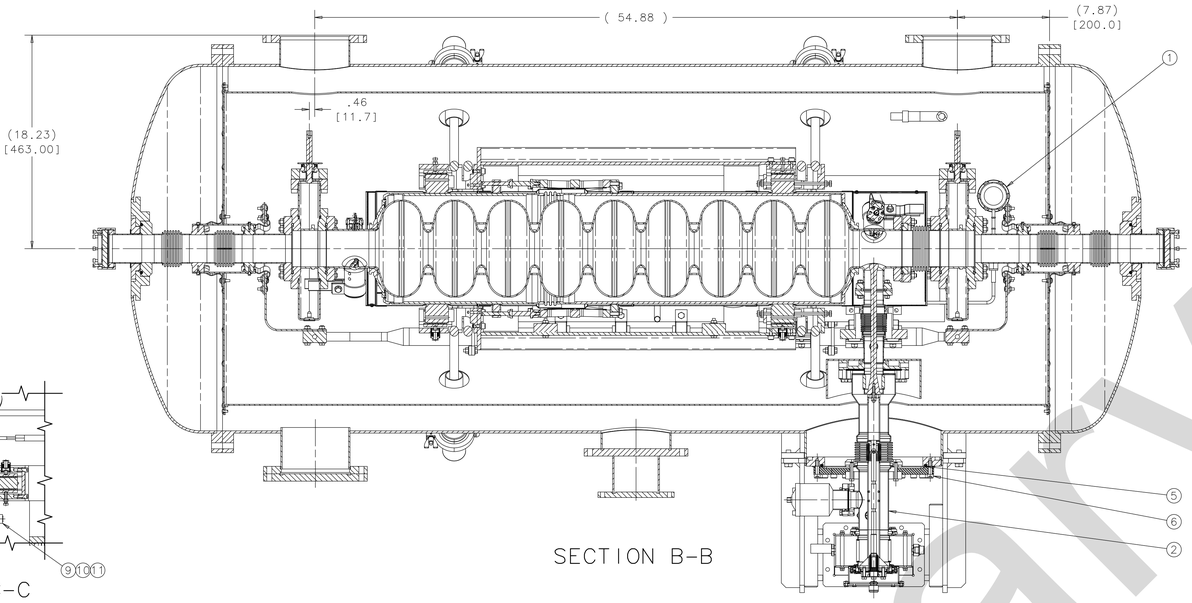

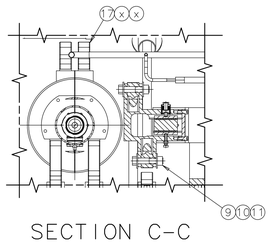

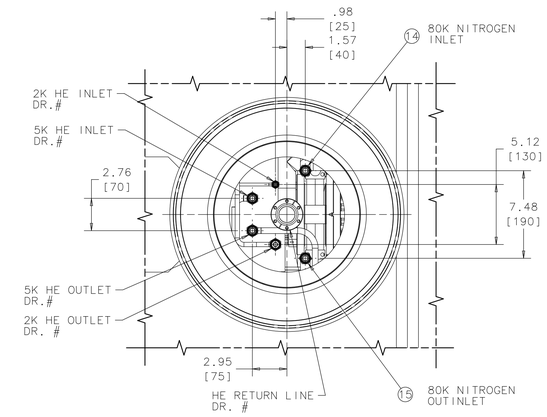

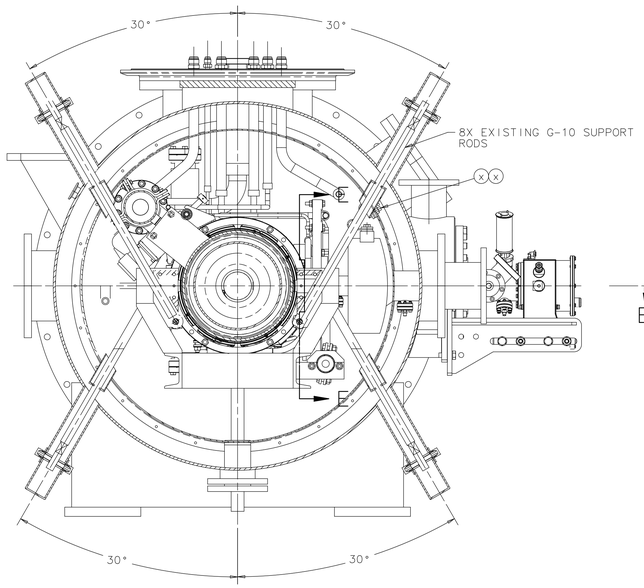

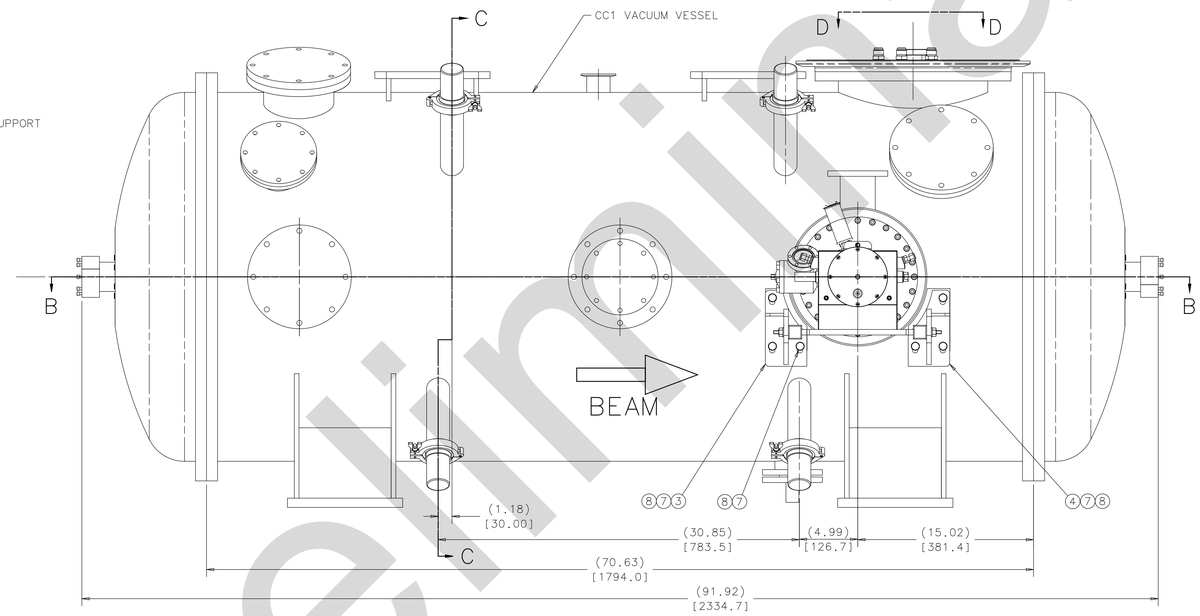

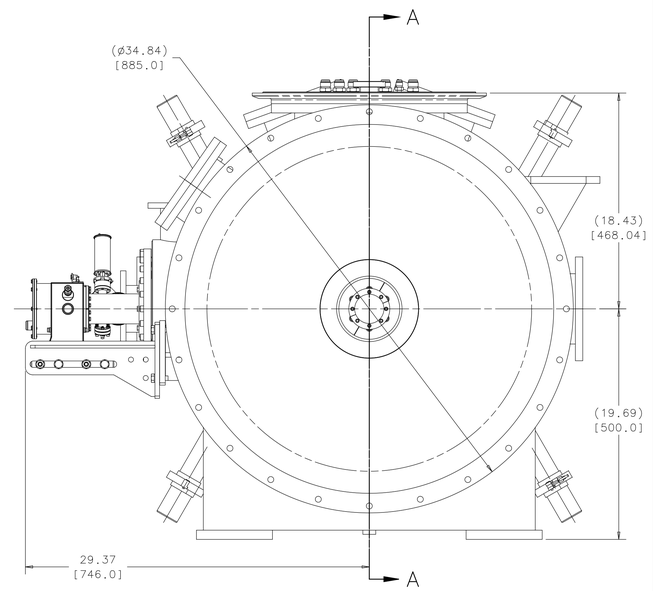

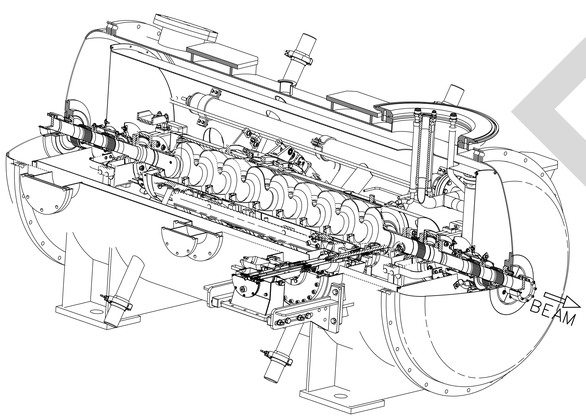

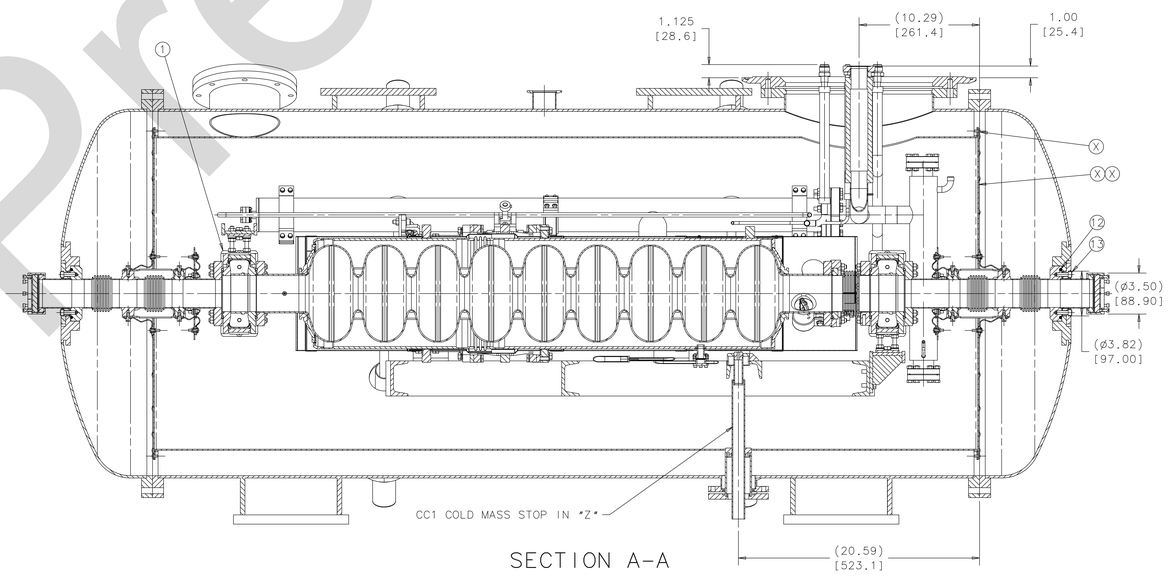

17		BRAID-80K TO MC ASSY	2
16		ENDCUP SHILD ASSY	2
15	MB-484715	HOSE-80K 15-INCH LIVE 0.50 WLDMT	1
14	MB-484714	HOSE-80K 21-INCH LIVE 0.50 WLDMT	1
13	COM'L	SHCS 5/18-18X1.0 UNC, 316SS	12
12	COM'L	PARKER O-RING 2-344	2
11	COM'L	NUT 1/2-13, SILICONE BR.	8
10	COM'L	WASHER 1/2 REGULAR, 316SS	16
9	COM'L	HHCS 1/2-13X2.5, SS316	8
8	COM'L	WASHER M10, 18-8 SS	6
7	COM'L	HHCS M10-1.5X30, 18-8SS	6
6	COM'L	SHCS M8-1.25X25, 316SS	24
5	COM'L	PARKER O-RING 2-372	1
4	D*0737051	RIGHT MOUNTING BRACKET ASSY	1
3	D*0736181	LEFT MOUNTING BRACKET ASSY	1
2	D*0988356	TTF-EINKOPLER (WARM PART)	1
1	ME-484686	COLDMASS-CC1 ASSEMBLY	1

UNLESS OTHERWISE SPECIFIED	ORIGINATOR	Y.ORLOV	31-AUG-2012
	DRAWN	F.MCCONOLOGUE	31-AUG-2012
± ± ±	CHECKED		
1. BREAK ALL SHARP EDGES MAX.	APPROVED		
2. DO NOT SCALE DRAWING. 3. DIMENSIONS BASED UPON	USED ON		
4. MAX. ALL MACH. SURFACES	MATERIAL	SEE PARTS LIST	
5. DRAWING UNITS:			

FERMI NATIONAL ACCELERATOR LABORATORY
UNITED STATES DEPARTMENT OF ENERGY

ASTA - CAPTURE CAVITY 1 CRYOMODULE
CC1 - UPGRADE ASSEMBLY

SCALE	DRAWING NUMBER	SHEET	REV
1:5 & NOTED	3886.801-ME-484684	1 OF 1	

CREATED WITH : Ideas12NXSeries GROUP: TD/DDCIS-DESIGN-COMPUTING

Preliminary

REV	DESCRIPTION	DRAWN / APPROVED	DATE / DATE
-	ER #10466 NEW RELEASE		
A	ECO #10513 - ITEM 1, P/N F0450-0250-RCE WAS 04620250RCE UPDATED NOTE 9	M.BATTISTA Y.ORLOV	21-AUG-2012 21-AUG-2012

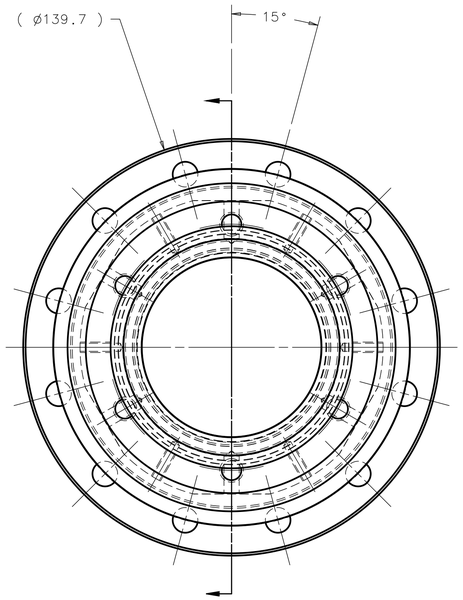

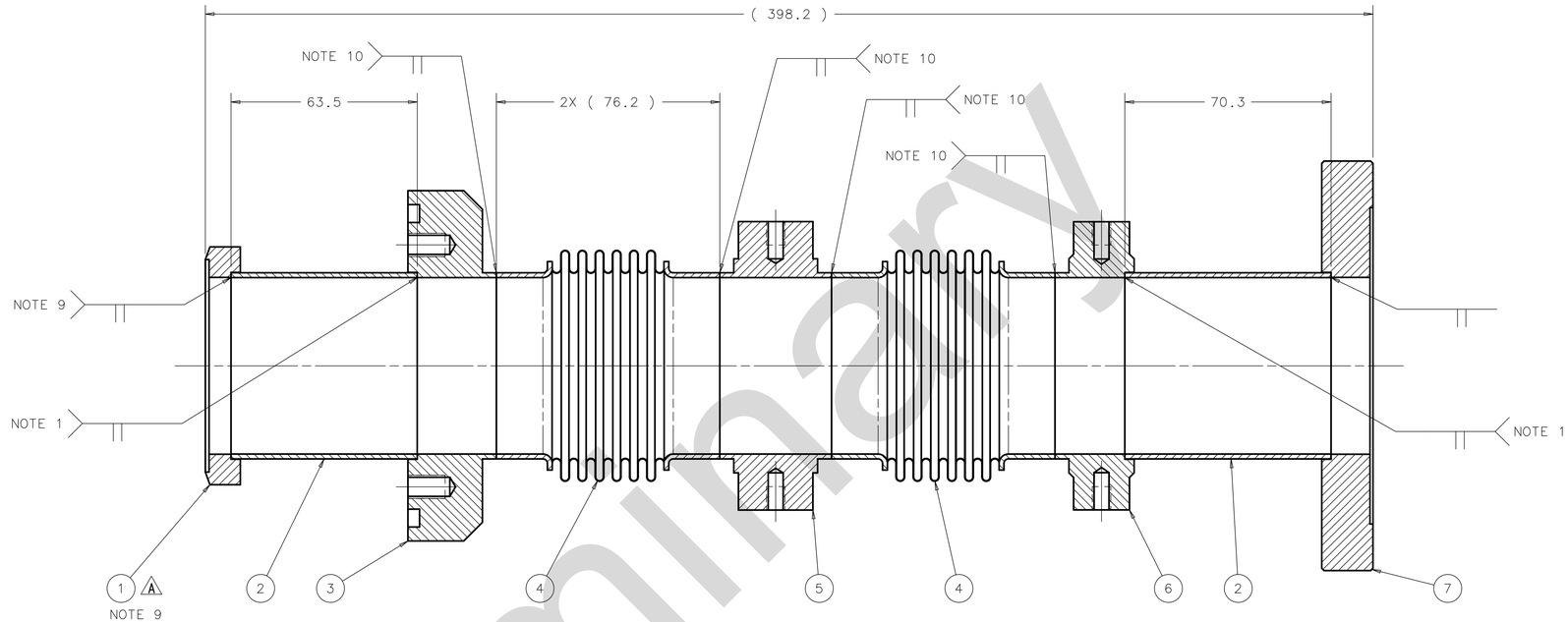

NOTES (UNLESS OTHERWISE SPECIFIED):

1. WELD SEQUENCE: WELD ITEM NOS. (2 & 3) AND (6 & 2) TOGETHER PRIOR TO WELDING ENTIRE WELDMENT.
2. ALL WELDS TO BE VACUUM LEAK TIGHT.
3. LEAK TEST: NO LEAK TO BE DETECTABLE ON THE MOST SENSITIVE SCALE OF A HELIUM LEAK DETECTOR WITH A MINIMUM SENSITIVITY OF 2×10^{-10} ATM.CC/SEC, FOR HELIUM. LEAK TEST AFTER ALL WELDING AND FINISHING OPERATIONS.
4. ALL INTERNAL WELD JOINTS SHOULD BE SMOOTH AND BLENDED WITH NO PROTRUSIONS.
5. LEAVE TUBE LENGTH 1/4" OVER LENGTH, TRIM TO FINAL (GIVEN) DIMENSION AFTER THE HYDROGEN DEGASSING. SEE NOTES 7 & 8.
6. HYDROGEN DEGAS AS FOLLOWS: TO REDUCE GRAIN BOUNDARY PRECIPITATIONS, THE TIME IN THE TEMPERATURE RANGE OF 600 TO 900°C IS KEPT TO A MINIMUM.
   - 6.1) INITIAL HEATING: NORMAL FURNACE HEATING CHARACTERISTICS ARE USED TO HEAT THE PART TO 550 TO 600°C AND HELD AT THAT TEMPERATURE FOR ONE-HALF (1/2) HOUR OR LESS.
   - 6.2) RAPID HEATING: RAPID HEATING TO RAISE PARTS TO 900°C IN ONE-HALF (1/2) HOUR OR LESS.
   - 6.3) BAKE OUT: PARTS SHOULD BE BAKED AT 900°C FOR TWO HOURS AND AT A PRESSURE OF 1x10E-4 TORR OR BETTER VACUUM.
   - 6.4) COOLDOWN: PARTS SHOULD BE COOLED FROM 900°C TO 600°C AS RAPIDLY AS POSSIBLE, PREFERABLY IN LESS THAN ONE-HALF (1/2) HOUR.
   - 6.5) CLEANLINESS: DEGASSED PART SHOULD BE KEPT AS CLEAN AS POSSIBLE. WRAP IN CLEANWHITE PAPER, CLEAN ALUMINUM FOIL OR POLYETHYLENE SHEET. ADHESIVE TAPE SHALL NOT BE USED IN CONTACT WITH ANY PART.
7. ELECTRO-POLISH AFTER DEGAS.
8. MACHINE TUBE TO FINAL DIMENSION.
9. (A) WELD ON ITEM 1 (MIDDLE PIECE ONLY OF CONFLAT FLANGE).
10. NO WELD PREP ON THE EXTERNAL BUTT WELDS. USE LIGHT FUSION WELDS TO MINIMIZE PERMEABILITY.
11. VENDOR SHALL PROVIDE ALL MATERIAL CERTIFICATIONS.
12. WELDMENT MUST BE FREE OF ALL DIRT, GREASE, OIL AND CHIPS.
13. SEALING SURFACE MUST BE FREE OF SCRATCHES AND NICKS WITH NO RADIAL SCORING.
14. VENDOR SHALL SUPPLY THE PART SUFFICIENTLY PACKAGED TO PROTECT THE FINISH AND INTEGRITY DURING SHIPMENT AND STORAGE.

ITEM	PART NO.	DESCRIPTION OR SIZE	QTY.
7	MB-439118	VAT VALVE MATING FLANGE	1
6	MC-484493	5K INTERCEPT	1
5	MC-484492	80K INTERCEPT	1
4	COML	BELLOWS, 2.5" X .006" X 3.0" O/A LENGTH X .75" TE, MATERIAL: ALL 316L STNLS STL AMERIFLEX 080-5433	2
3	MB-439117	INTERIOR VESSEL FLANGE	1
2	COML	ø2-1/2" OD X .065" WALL 304 STNLS STL TUBE	AS REQ'D
1	COML	ø4-1/2" ROTATABLE FLANGE-MIDDLE VARIAN P/N F0450-0250-RCE OR EQUIVALENT	1

(A) NOTE 9

PARTS LIST

UNLESS OTHERWISE SPECIFIED			ORIGINATOR	Y.ORLOV	27-JUN-2012
0.X	0.XX	.XXXX	DRAWN	F.MCCONOLOGUE	27-JUN-2012
± 0.3	± - -	± 1°	CHECKED	N.TANOVIC	13-JUL-2012
			APPROVED	Y.ORLOV	12-JUL-2012

1. BREAK ALL SHARP EDGES - - MAX.
2. DO NOT SCALE DRAWING.
3. DIMENSIONS BASED UPON ASME Y14.5M-1994
4. MAX. ALL MACH. SURFACES N7
5. DRAWING UNITS: METRIC

USED ON

MATERIAL: SEE PARTS LIST

FERMI NATIONAL ACCELERATOR LABORATORY
UNITED STATES DEPARTMENT OF ENERGY

ASTA - CAPTURE CAVITY 1 WARM TO COLD TRANSITIONS US VALVE TO MODULE WELDMENT

SCALE	DRAWING NUMBER	SHEET	REV
1:1	3886.801-MD-484490	1 OF 1	A

CREATED WITH : Ideas12NXSeries | GROUP: TD/DDCIS-DESIGN-COMPUTING

Preliminary

REV	DESCRIPTION	DRAWN / APPROVED	DATE / DATE
-	ER #10466 NEW RELEASE		
A	ECO #10513 - ITEM 1, P/N F0450-0250-RCE WAS 04620250RCE UPDATED NOTE 9	M.BATTISTA Y.ORLOV	21-AUG-2012 22-AUG-2012

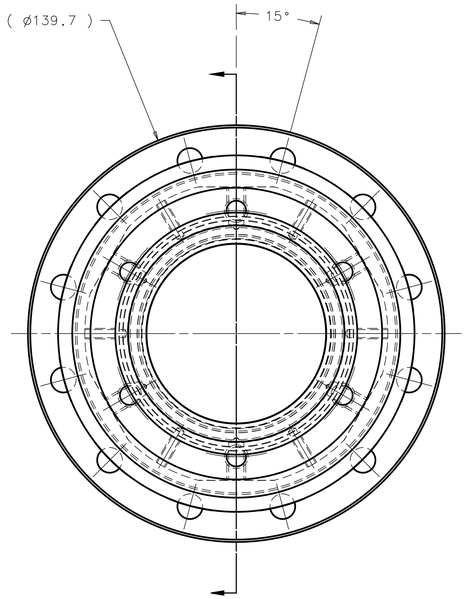

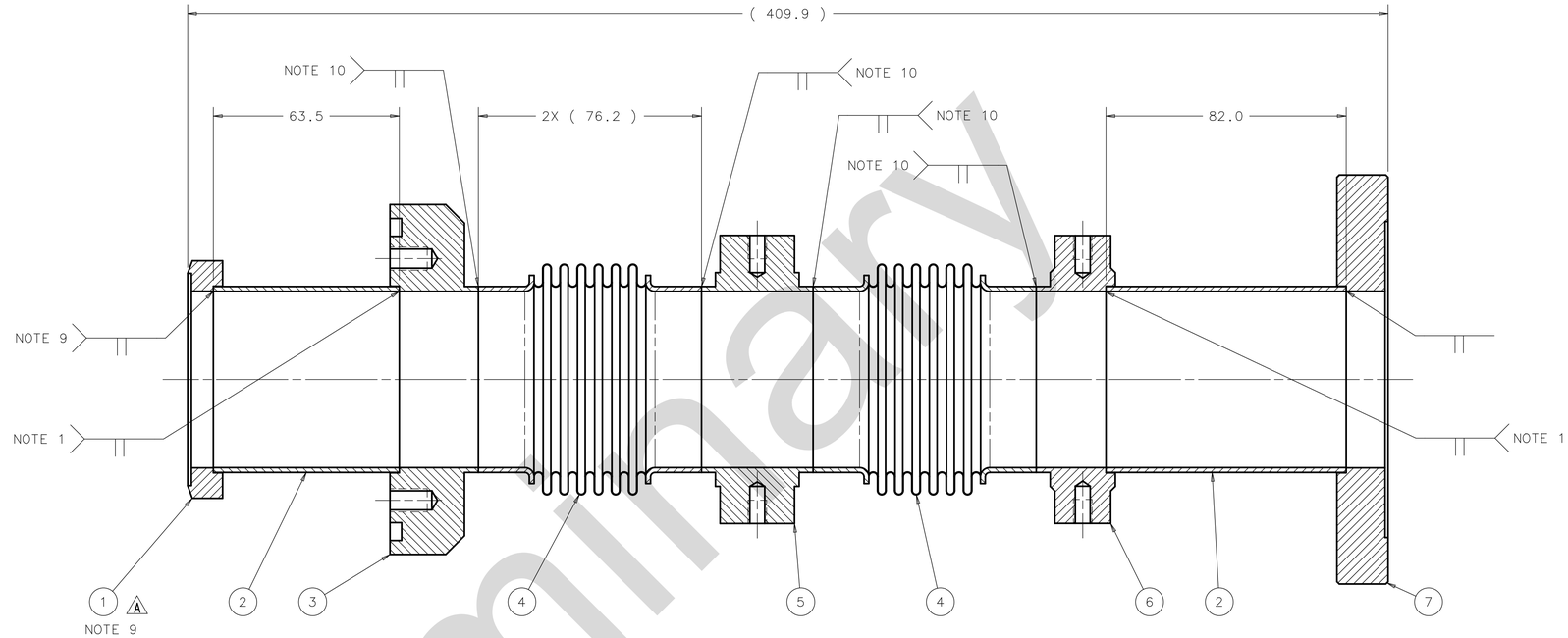

NOTES (UNLESS OTHERWISE SPECIFIED):

1. WELD SEQUENCE: WELD ITEM NOS. (2 & 3) AND (6 & 2) TOGETHER PRIOR TO WELDING ENTIRE WELDMENT.
2. ALL WELDS TO BE VACUUM LEAK TIGHT.
3. LEAK TEST: NO LEAK TO BE DETECTABLE ON THE MOST SENSITIVE SCALE OF A HELIUM LEAK DETECTOR WITH A MINIMUM SENSITIVITY OF 2x10^{-10} ATM.CC/SEC, FOR HELIUM. LEAK TEST AFTER ALL WELDING AND FINISHING OPERATIONS.
4. ALL INTERNAL WELD JOINTS SHOULD BE SMOOTH AND BLENDED WITH NO PROTRUSIONS.
5. LEAVE TUBE LENGTH 1/4" OVER LENGTH, TRIM TO FINAL (GIVEN) DIMENSION AFTER THE HYDROGEN DEGASSING. SEE NOTES 7 & 8.
6. HYDROGEN DEGAS AS FOLLOWS: TO REDUCE GRAIN BOUNDARY PRECIPITATIONS, THE TIME IN THE TEMPERATURE RANGE OF 600 TO 900°C IS KEPT TO A MINIMUM.
   - 6.1) INITIAL HEATING: NORMAL FURNACE HEATING CHARACTERISTICS ARE USED TO HEAT THE PART TO 550 TO 600°C AND HELD AT THAT TEMPERATURE FOR ONE-HALF (1/2) HOUR OR LESS.
   - 6.2) RAPID HEATING: RAPID HEATING TO RAISE PARTS TO 900°C IN ONE-HALF (1/2) HOUR OR LESS.
   - 6.3) BAKE OUT: PARTS SHOULD BE BAKED AT 900°C FOR TWO HOURS AND AT A PRESSURE OF 1x10E-4 TORR OR BETTER VACUUM.
   - 6.4) COOLDOWN: PARTS SHOULD BE COOLED FROM 900°C TO 600°C AS RAPIDLY AS POSSIBLE, PREFERABLY IN LESS THAN ONE-HALF (1/2) HOUR.
   - 6.5) CLEANLINESS: DEGASSED PART SHOULD BE KEPT AS CLEAN AS POSSIBLE. WRAP IN CLEANWHITE PAPER, CLEAN ALUMINUM FOIL OR POLYETHYLENE SHEET. ADHESIVE TAPE SHALL NOT BE USED IN CONTACT WITH ANY PART.
7. ELECTRO-POLISH AFTER DEGAS.
8. MACHINE TUBE TO FINAL DIMENSION.
9. (A) WELD ON ITEM 1 (MIDDLE PIECE ONLY OF CONFLAT FLANGE).
10. NO WELD PREP ON THE EXTERNAL BUTT WELDS. USE LIGHT FUSION WELDS TO MINIMIZE PERMEABILITY.
11. VENDOR SHALL PROVIDE ALL MATERIAL CERTIFICATIONS.
12. WELDMENT MUST BE FREE OF ALL DIRT, GREASE, OIL AND CHIPS.
13. SEALING SURFACE MUST BE FREE OF SCRATCHES AND NICKS WITH NO RADIAL SCORING.
14. VENDOR SHALL SUPPLY THE PART SUFFICIENTLY PACKAGED TO PROTECT THE FINISH AND INTEGRITY DURING SHIPMENT AND STORAGE.

ITEM	PART NO.	DESCRIPTION OR SIZE	QTY.
7	MB-439118	VAT VALVE MATING FLANGE	1
6	MC-484493	5K INTERCEPT	1
5	MC-484492	80K INTERCEPT	1
4	COML	BELLOWS, 2.5" X .006" X 3.0" O/A LENGTH X .75" TE, MATERIAL: ALL 316L STNLS STL AMERIFLEX 080-5433	2
3	MB-439117	INTERIOR VESSEL FLANGE	1
2	COML	ø2-1/2" OD X .065" WALL 304 STNLS STL TUBE	AS REQ'D
1	COML	ø4-1/2" ROTATABLE FLANGE - MIDDLE VARIAN P/N F0450-0250-RCE OR EQUIVALENT	1

(A) NOTE 9

PARTS LIST

UNLESS OTHERWISE SPECIFIED				
0.X	0.XX	ANGLES	ORIGINATOR	Y.ORLOV	27-JUN-2012
± 0.3	± - -	± 1°	DRAWN	F.MCCONOLOGUE	27-JUN-2012
			CHECKED	N.TANOVIC	13-JUL-2012
			APPROVED	Y.ORLOV	12-JUL-2012

1. BREAK ALL SHARP EDGES - - MAX.
2. DO NOT SCALE DRAWING.
3. DIMENSIONS BASED UPON ASME Y14.5M-1994
4. MAX. ALL MACH. SURFACES N7
5. DRAWING UNITS: METRIC

USED ON

MATERIAL: SEE PARTS LIST

FERMI NATIONAL ACCELERATOR LABORATORY
UNITED STATES DEPARTMENT OF ENERGY

ASTA - CAPTURE CAVITY 1 WARM TO COLD TRANSITIONS DS VALVE TO MODULE WELDMENT

SCALE	DRAWING NUMBER	SHEET	REV
1:1	3886.801-MD-484491	1 OF 1	A

CREATED WITH : Ideas12NXSeries | GROUP: TD/DDCIS-DESIGN-COMPUTING

Preliminary

REV	DESCRIPTION	DRAWN / APPROVED	DATE / DATE
-	ER #10504 NEW RELEASE		

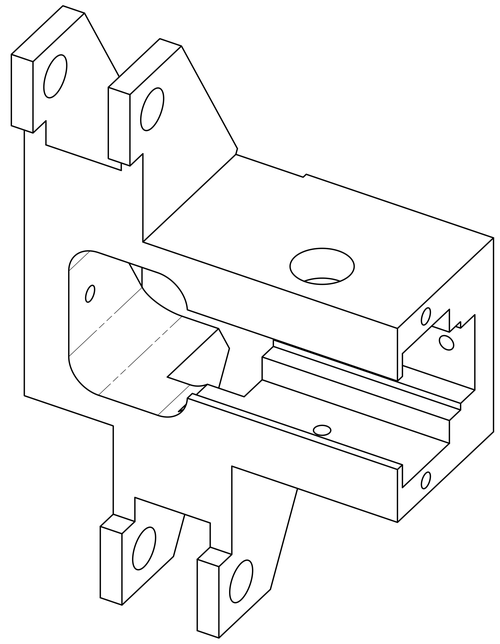

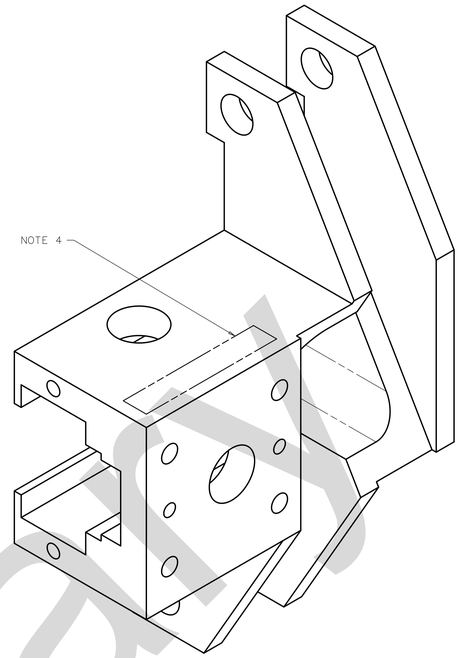

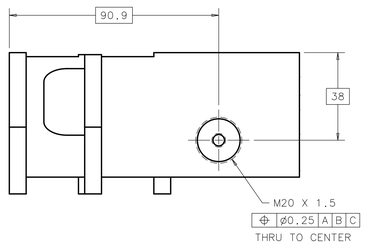

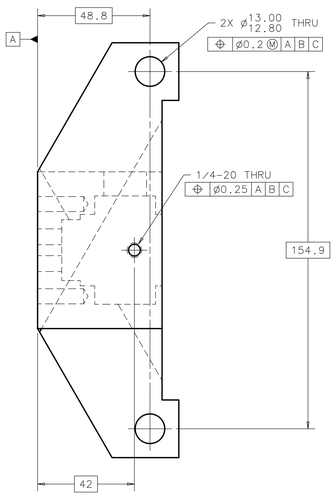

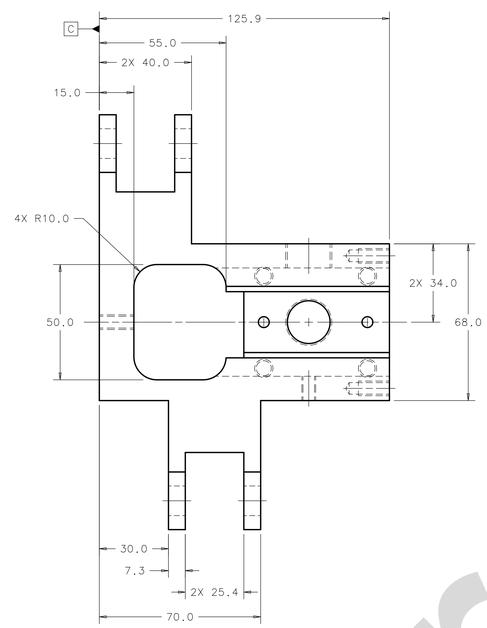

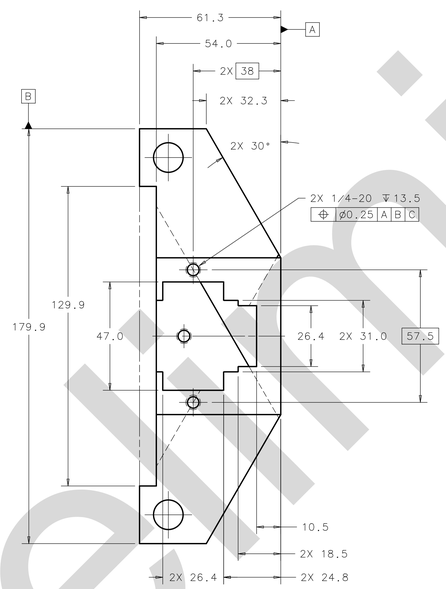

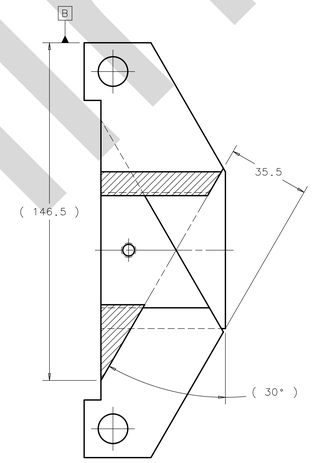

SECTION A-A

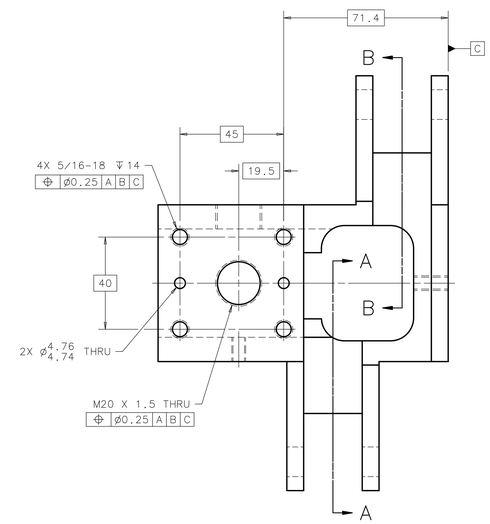

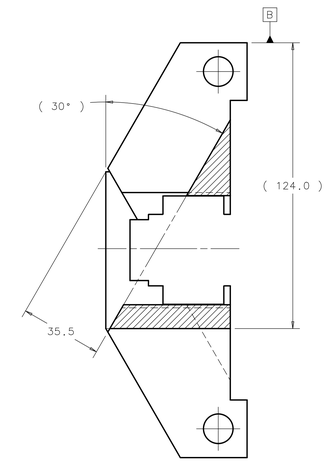

SECTION B-B

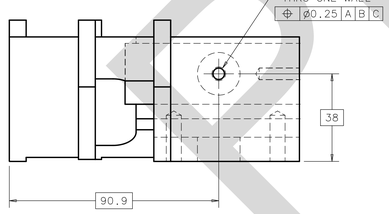

Preliminary

NOTES (UNLESS OTHERWISE SPECIFIED):

1. PART MUST BE FREE OF DIRT, GREASE, OIL AND CHIPS.
2. PART TO BE FREE OF ALL SHARP EDGES, CORNERS, AND BURRS.
3. TRAILING ZEROS ON DIMENSIONS DENOTE TOLERANCE.
4. SIX DIGIT PART NUMBER SHALL BE ENGRAVED, ETCHED, PERMANENT INK OR STEEL STAMPED IN THIS LOCATION WITH 1/8" HIGH CHARACTERS.

UNLESS OTHERWISE SPECIFIED			ORIGINATOR	Y.ORLOV	17-AUG-2012
0.X	0.XX	ANGLES	DRAWN	V.MARTINEZ	
± 0.3	± - -	± 1°	CHECKED		
1. BREAK ALL SHARP EDGES 0.5 MAX.			APPROVED		
2. DO NOT SCALE DRAWING.			USED ON		
3. DIMENSIONS BASED UPON ASME Y14.5M-1994					
4. MAX. ALL MACH. SURFACES N8			MATERIAL	STNLS STL 316L	
5. DRAWING UNITS: MM					

FERMI NATIONAL ACCELERATOR LABORATORY
UNITED STATES DEPARTMENT OF ENERGY

ASTA - CAPTURE CAVITY 1
COLDMASS - CC1 ASSEMBLY
HOUSING - NEEDLE BEARINGS - 1

SCALE	DRAWING NUMBER	SHEET	REV
1:1	3886.801-ME-484624	1 OF 1	

CREATED WITH : Ideas12NXSeries GROUP: TD/DDCIS-DESIGN-COMPUTING

REV	DESCRIPTION	DRAWN / APPROVED	DATE / DATE
-	ER #10504 NEW RELEASE		

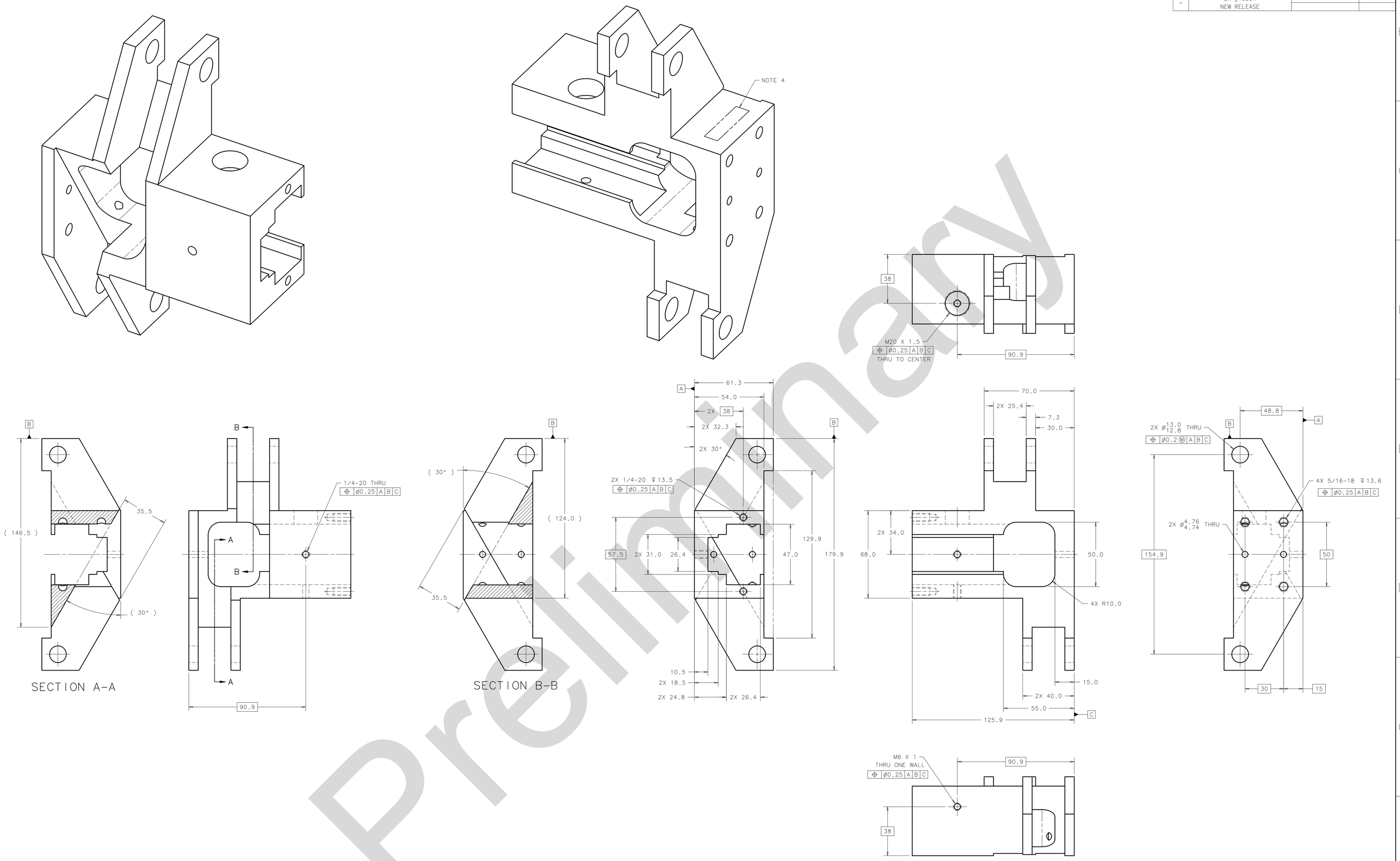

Preliminary

NOTES (UNLESS OTHERWISE SPECIFIED):

1. PART MUST BE FREE OF DIRT, GREASE, OIL AND CHIPS.
2. PART TO BE FREE OF ALL SHARP EDGES, CORNERS, AND BURRS.
3. TRAILING ZEROS ON DIMENSIONS DENOTE TOLERANCE.
4. SIX DIGIT PART NUMBER SHALL BE ENGRAVED, ETCHED, PERMANENT INK OR STEEL STAMPED IN THIS LOCATION WITH 1/8" HIGH CHARACTERS.

UNLESS OTHERWISE SPECIFIED			ORIGINATOR	Y.ORLOV	08-AUG-2012
0.X	0.XX	ANGLES	DRAWN	V.MARTINEZ	08-AUG-2012
± 0.3	± - -	± 1°	CHECKED		
1. BREAK ALL SHARP EDGES 0.5 MAX. 2. DO NOT SCALE DRAWING. 3. DIMENSIONS BASED UPON ASME Y14.5M-1994 4. MAX. ALL MACH. SURFACES 1.6 5. DRAWING UNITS: MM			APPROVED		
			USED ON		
			MATERIAL	STNLS STL 316L	

FERMI NATIONAL ACCELERATOR LABORATORY
UNITED STATES DEPARTMENT OF ENERGY

ASTA - CAPTURE CAVITY 1
COLDMASS - CC1 ASSEMBLY
HOUSING - NEEDLE BEARINGS - 2

SCALE	DRAWING NUMBER	SHEET	REV
1:1	3886.801-ME-484625	1 OF 1	

CREATED WITH : Ideas12NXSeries GROUP: TD/DDCIS-DESIGN-COMPUTING

REV	DESCRIPTION	DRAWN / APPROVED	DATE / DATE
-	ER #10504 NEW RELEASE		

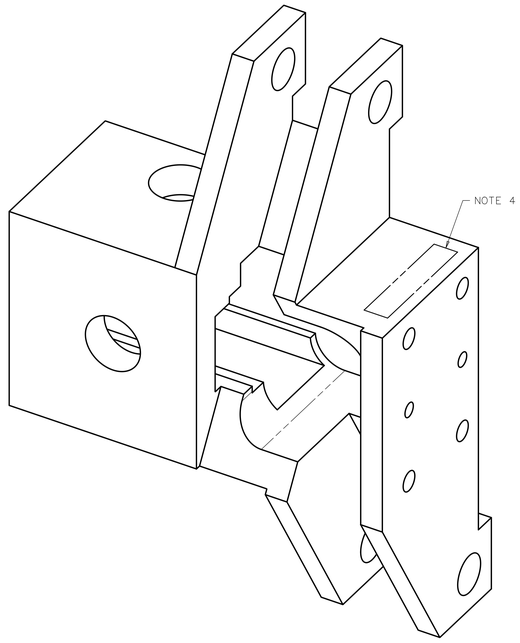

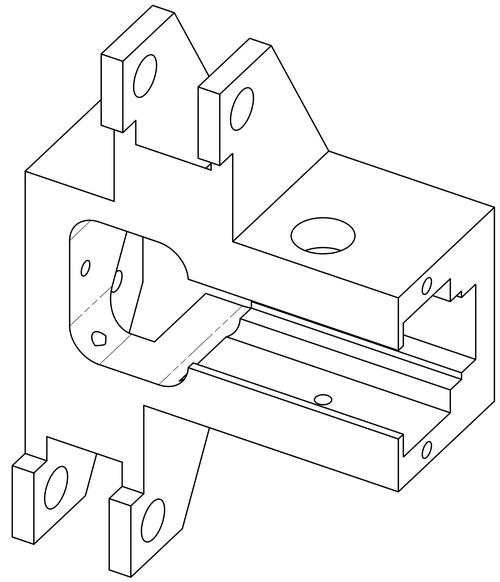

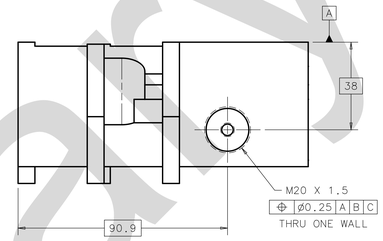

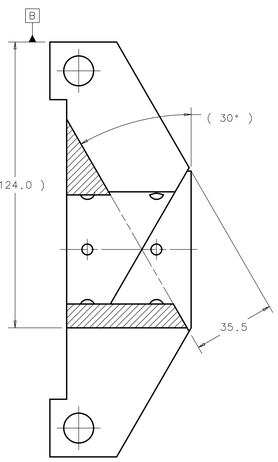

SECTION A-A

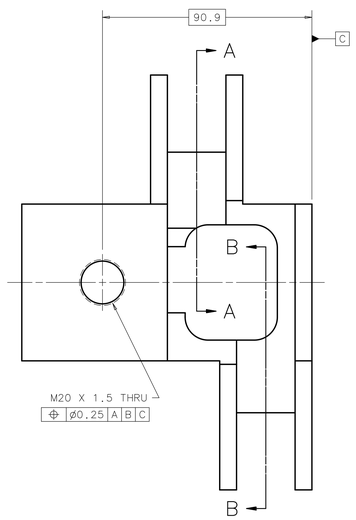

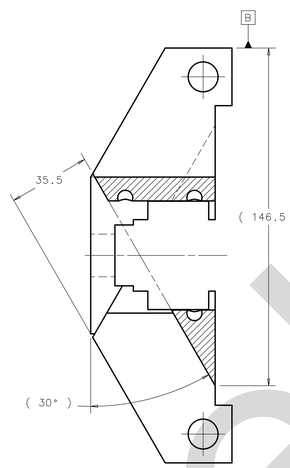

SECTION B-B

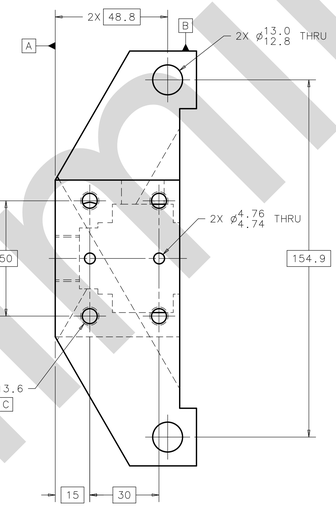

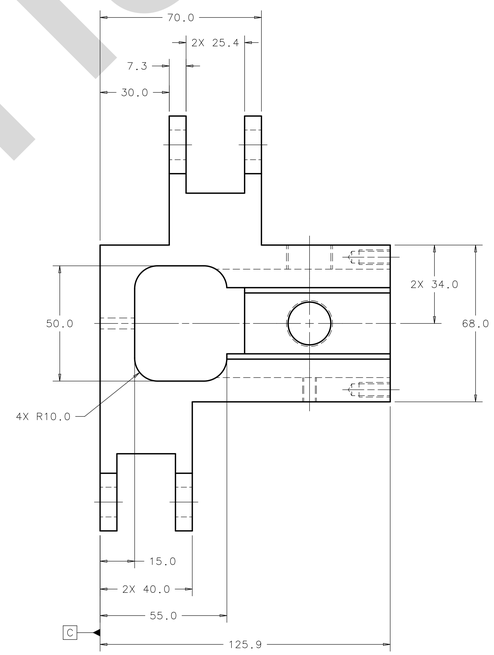

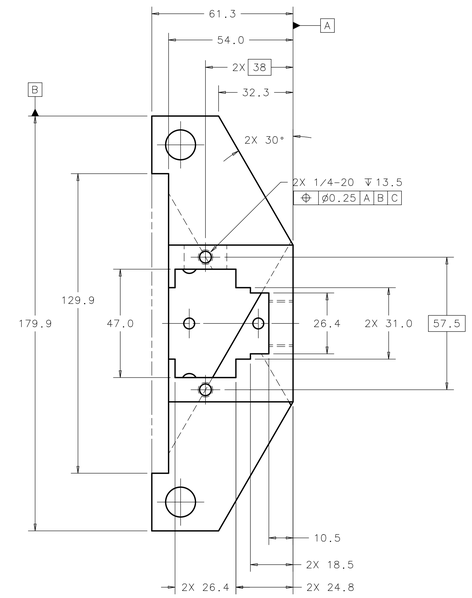

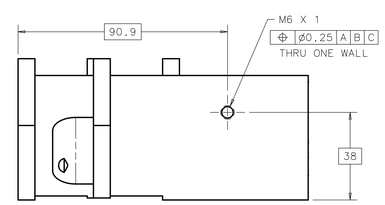

Preliminary

NOTES (UNLESS OTHERWISE SPECIFIED):

1. PART MUST BE FREE OF DIRT, GREASE, OIL AND CHIPS.
2. PART TO BE FREE OF ALL SHARP EDGES, CORNERS, AND BURRS.
3. TRAILING ZEROS ON DIMENSIONS DENOTE TOLERANCE.
4. SIX DIGIT PART NUMBER SHALL BE ENGRAVED, ETCHED, PERMANENT INK OR STEEL STAMPED IN THIS LOCATION WITH 1/8" HIGH CHARACTERS.

UNLESS OTHERWISE SPECIFIED			ORIGINATOR	Y.ORLOV	17-AUG-2012
0.X	0.XX	ANGLES	DRAWN	V.MARTINEZ	17-AUG-2012
± 0.3	± - -	± 1°	CHECKED		
1. BREAK ALL SHARP EDGES 0.5 MAX. 2. DO NOT SCALE DRAWING. 3. DIMENSIONS BASED UPON ASME Y14.5M-1994 4. MAX. ALL MACH. SURFACES N8 5. DRAWING UNITS: MM			APPROVED		
			USED ON		
			MATERIAL	STNLS STL 316L	

FERMI NATIONAL ACCELERATOR LABORATORY
UNITED STATES DEPARTMENT OF ENERGY

ASTA - CAPTURE CAVITY 1
COLDMASS - CC1 ASSEMBLY
HOUSING - NEEDLE BEARINGS - 3

SCALE	DRAWING NUMBER	SHEET	REV
1:1	3886.801-ME-484626	1 OF 1	

CREATED WITH : Ideas12NXSeries GROUP: TD/DDCIS-DESIGN-COMPUTING

REV	DESCRIPTION	DRAWN / APPROVED	DATE / DATE
	ER# NEW RELEASE		

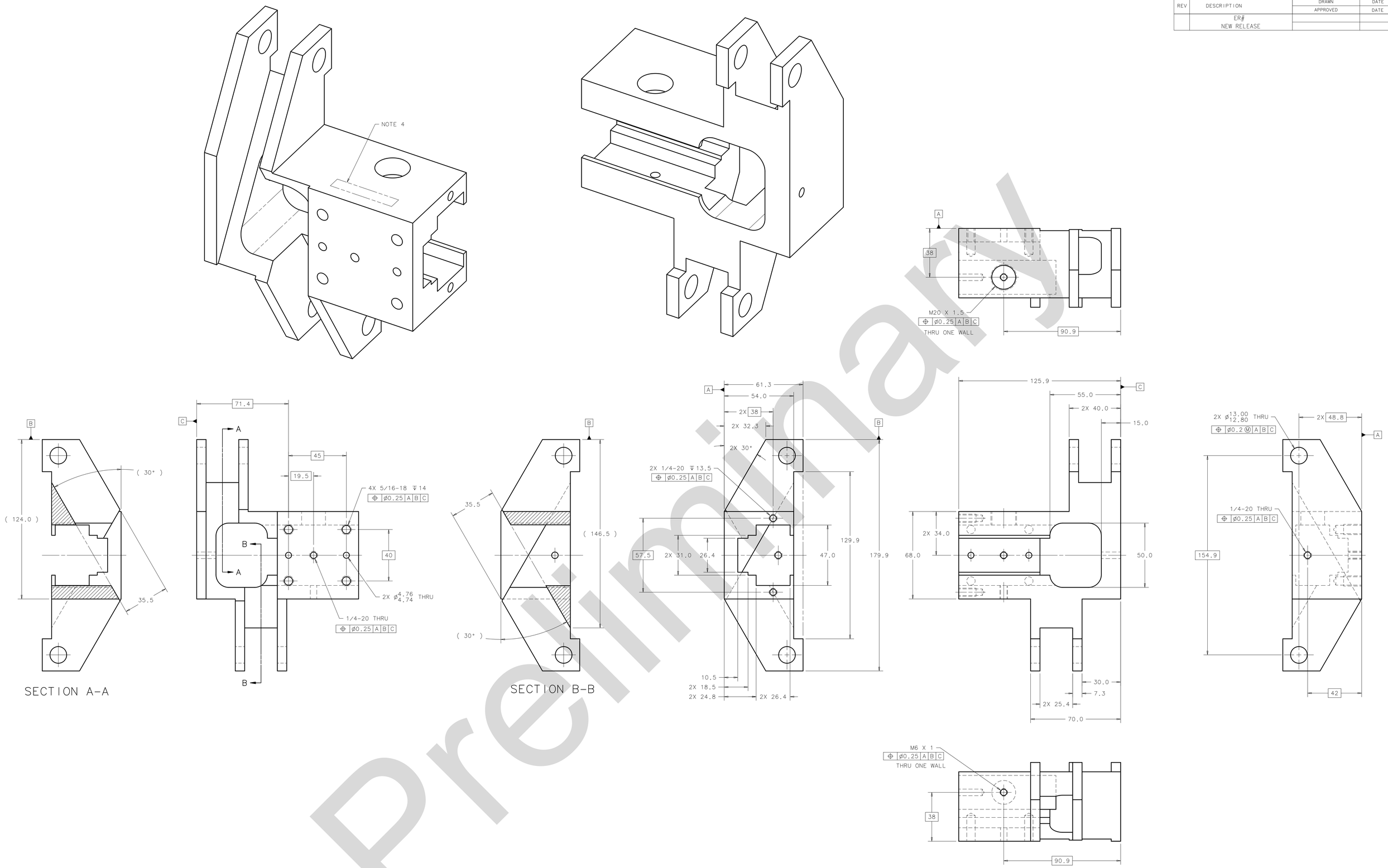

Preliminary

NOTES (UNLESS OTHERWISE SPECIFIED):

1. PART MUST BE FREE OF DIRT, GREASE, OIL AND CHIPS.
2. PART TO BE FREE OF ALL SHARP EDGES, CORNERS, AND BURRS.
3. TRAILING ZEROS ON DIMENSIONS DENOTE TOLERANCE.
4. SIX DIGIT PART NUMBER SHALL BE ENGRAVED, ETCHED, PERMANENT INK OR STEEL STAMPED IN THIS LOCATION WITH 1/8" HIGH CHARACTERS.

UNLESS OTHERWISE SPECIFIED			ORIGINATOR	Y.ORLOV	17-AUG-2012
.X	.XX	ANGLES	DRAWN	V.MARTINEZ	17-AUG-2012
± 0.3	± - -	± 1°	CHECKED		
1. BREAK ALL SHARP EDGES 0.5 MAX. 2. DO NOT SCALE DRAWING. 3. DIMENSIONS BASED UPON ASME Y14.5M-1994. 4. MAX. ALL MACH. SURFACES N8 5. DRAWING UNITS: MM			APPROVED		
			USED ON		
			MATERIAL	STNLS STL 316L	

FERMI NATIONAL ACCELERATOR LABORATORY
UNITED STATES DEPARTMENT OF ENERGY

ASTA - CAPTURE CAVITY 1 COLDMASS - CC1 ASSEMBLY HOUSING - NEEDLE BEARINGS - 4

SCALE	DRAWING NUMBER	SHEET	REV
1:1	3886.801-ME-484627	1 OF 1	

CREATED WITH : Ideas12NXSeries GROUP: TD/DDCIS-DESIGN-COMPUTING

REV	DESCRIPTION	DRAWN / APPROVED	DATE / DATE
	ER# 10504 NEW RELEASE		

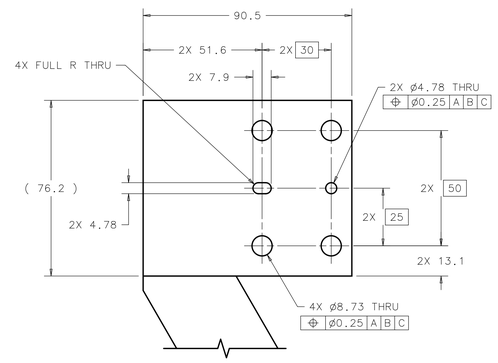

DETAIL F
SCALE 1/1

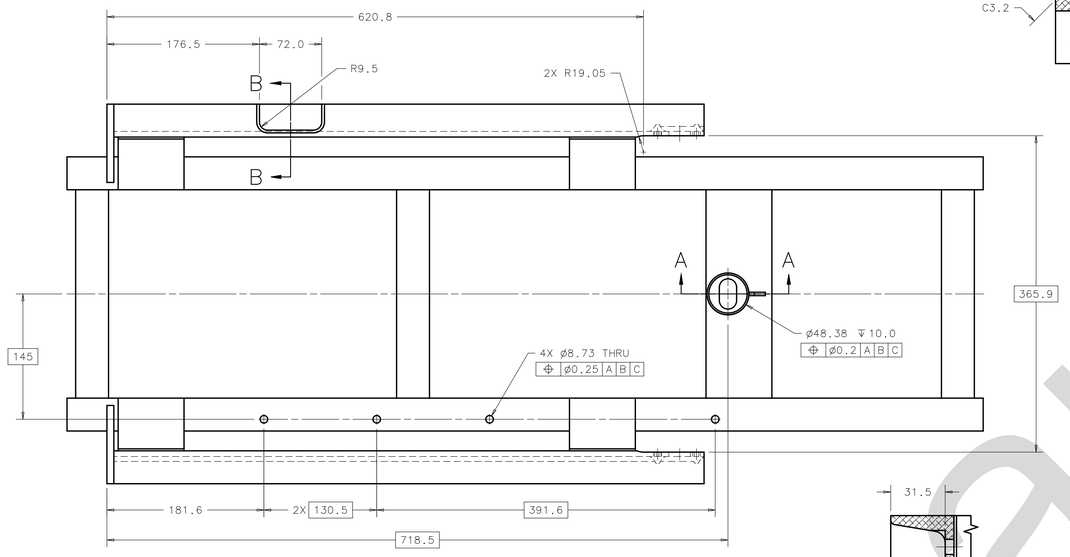

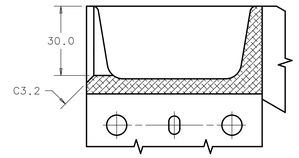

SECTION B-B
SCALE 1/1

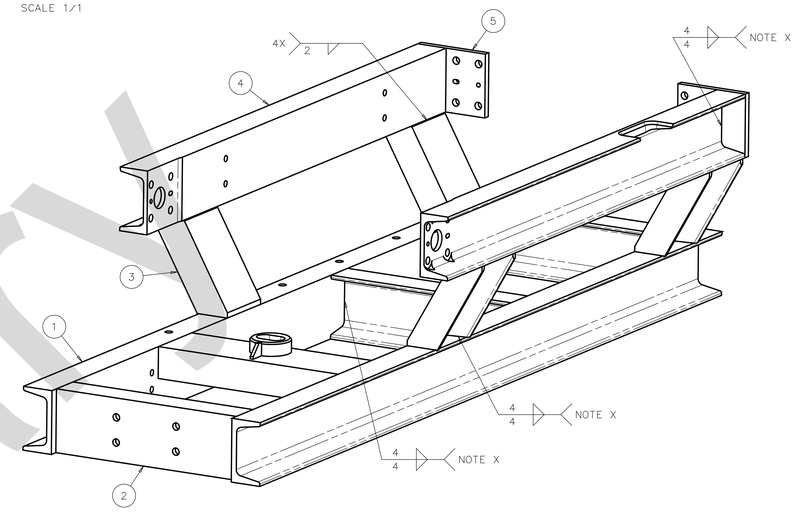

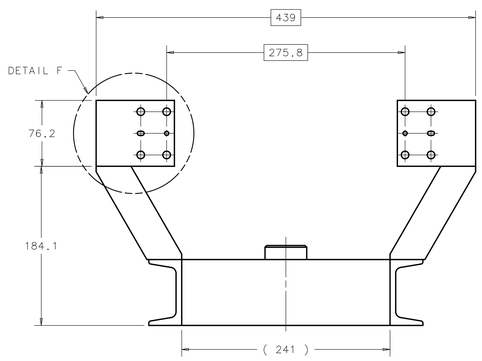

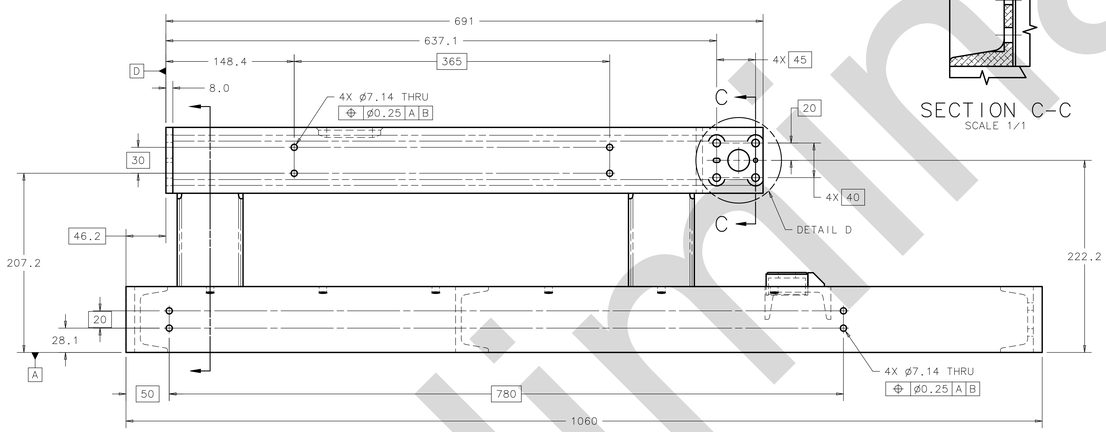

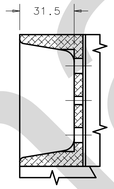

SECTION C-C
SCALE 1/1

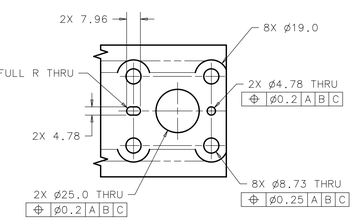

DETAIL D
SCALE 3/4

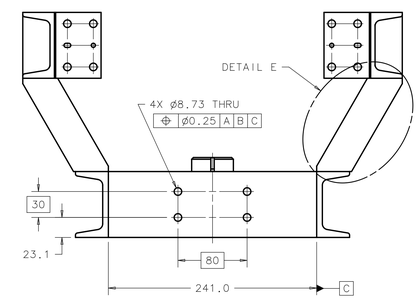

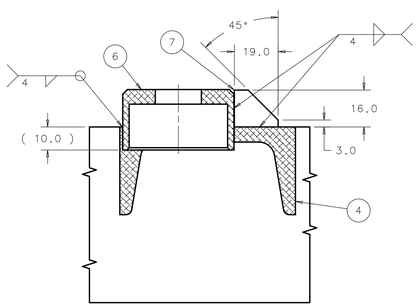

SECTION A-A
SCALE 1/1

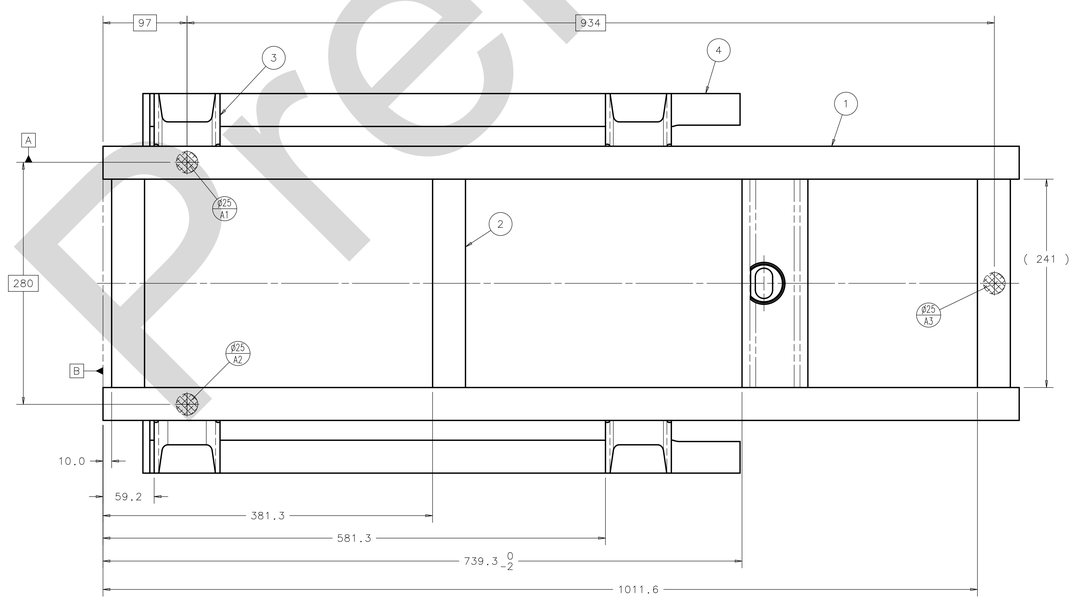

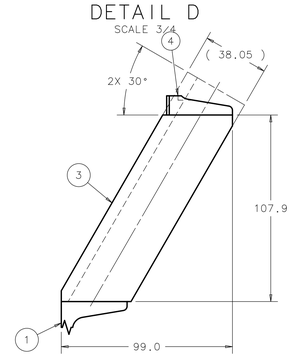

DETAIL E
SCALE 3/4

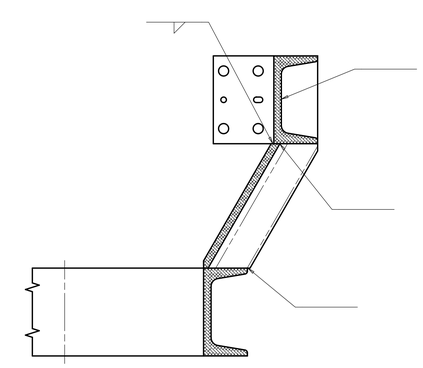

ITEM	PART NO.	DESCRIPTION OR SIZE	QTY.
7	COM'L	ALUMINUM 6061-T6, 5/32" THK	1
6	MB-	SLOT Z-STOP	1
5			
1	COM'L	CHANNEL,AMERICAN STANDARD,6061-T6 3" X1.498"X .170" THK, 691MM LG.	2
1	COM'L	CHANNEL,AMERICAN STANDARD,6061-T6 3" X1.498"X .170" THK, 160MM LG.	4
2	COM'L	CHANNEL,AMERICAN STANDARD,6061-T6 3" X1.498"X .170" THK, 241MM LG.	4
1	COM'L	CHANNEL,AMERICAN STANDARD,6061-T6 3" X1.498"X .170" THK,1060MM LG.	2

PARTS LIST

NOTES (UNLESS OTHERWISE SPECIFIED):

1. WELDMENT MUST BE FREE OF DIRT, GREASE, OIL AND CHIPS.
2. PERFORM FINAL MACHINING AFTER WELDING.
   STRESS RELIEVE AFTER WELDING AND BEFORE MACHINING.
   FINAL MACHINING AFTER WELDING IF REQUIRED.
   MACHINING MAY BE PERFORMED PRIOR TO WELDING.
3.
4. EST. WEIGHT:

UNLESS OTHERWISE SPECIFIED			
ORIGINATOR	Y.ORLOV	15-AUG-2012	
DRAWN	F.MCCONOLOGUE	15-AUG-2012	
CHECKED			
APPROVED			
USED ON	ME-484684		
MATERIAL	SEE PARTS LIST		

1. BREAK ALL SHARP EDGES MAX.
2. DO NOT SCALE DRAWING.
3. DIMENSIONS BASED UPON
4. MAX. ALL MACH. SURFACES
5. DRAWING UNITS:

FERMI NATIONAL ACCELERATOR LABORATORY
UNITED STATES DEPARTMENT OF ENERGY

ASTA - CAPTURE CAVITY 1
COLDMASS - CC1 ASSEMBLY
FRAME - LOWER WELDMENT

SCALE	DRAWING NUMBER	SHEET	REV
3:8 & NOTED	3886.801-ME-484685	1 OF 1	

CREATED WITH : Ideas12NXSeries GROUP: TD/DDCIS-DESIGN-COMPUTING

Preliminary

REV	DESCRIPTION	DRAWN / APPROVED	DATE / DATE
-	ER #10504 NEW RELEASE		

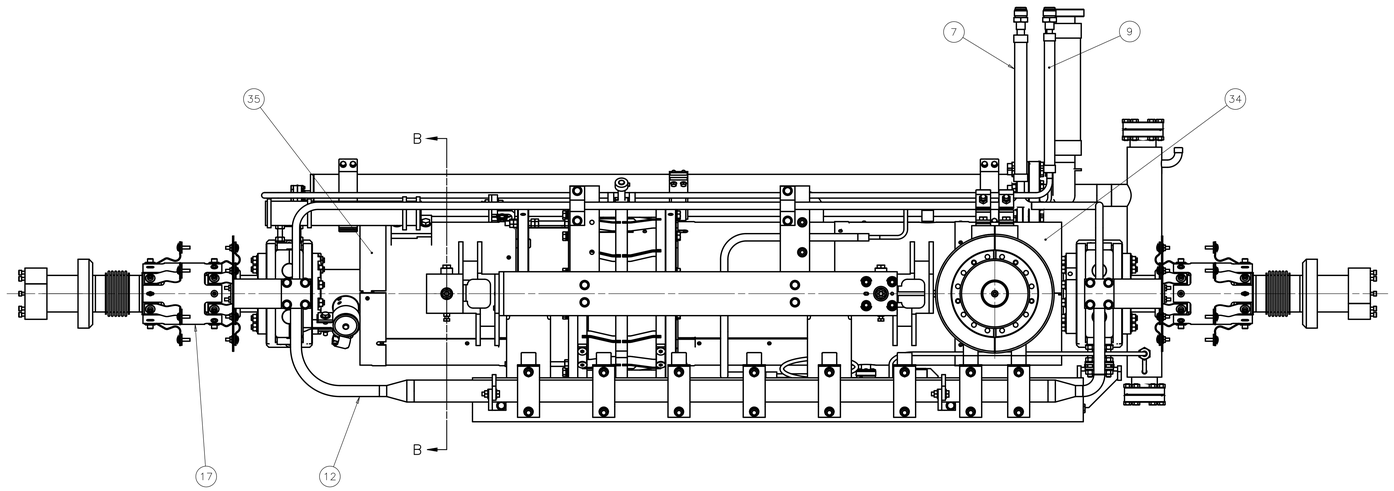

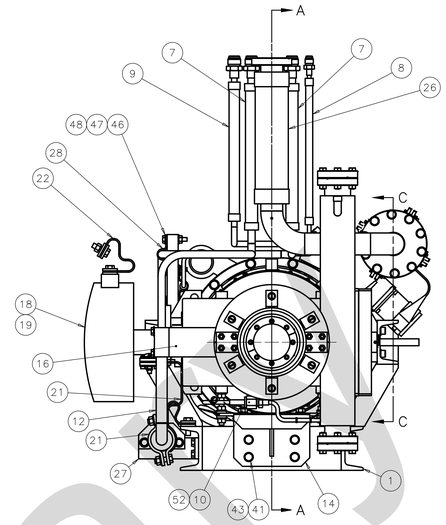

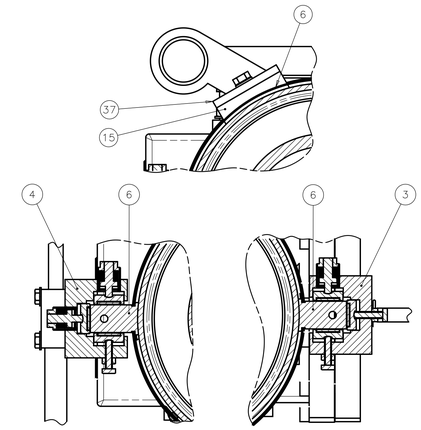

SECTION B-B DETAILS
SCALE 1:2

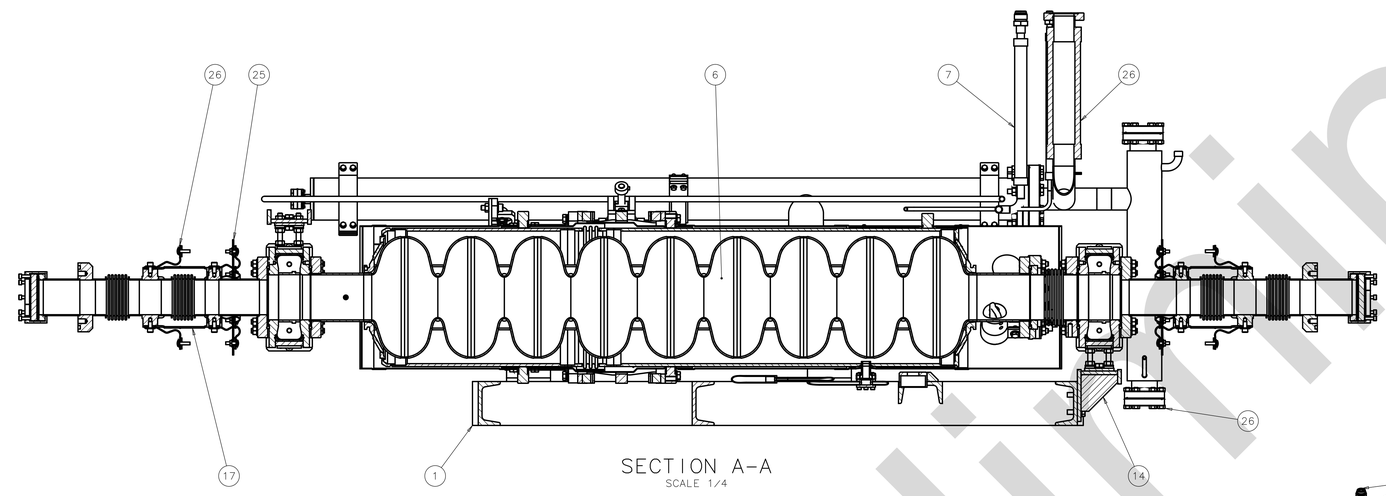

SECTION A-A
SCALE 1/4

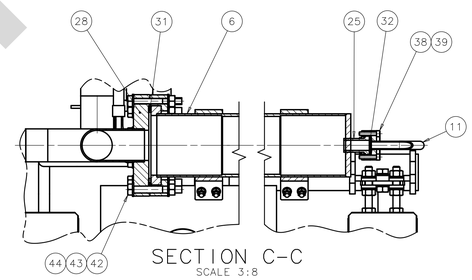

SECTION C-C
SCALE 3:8

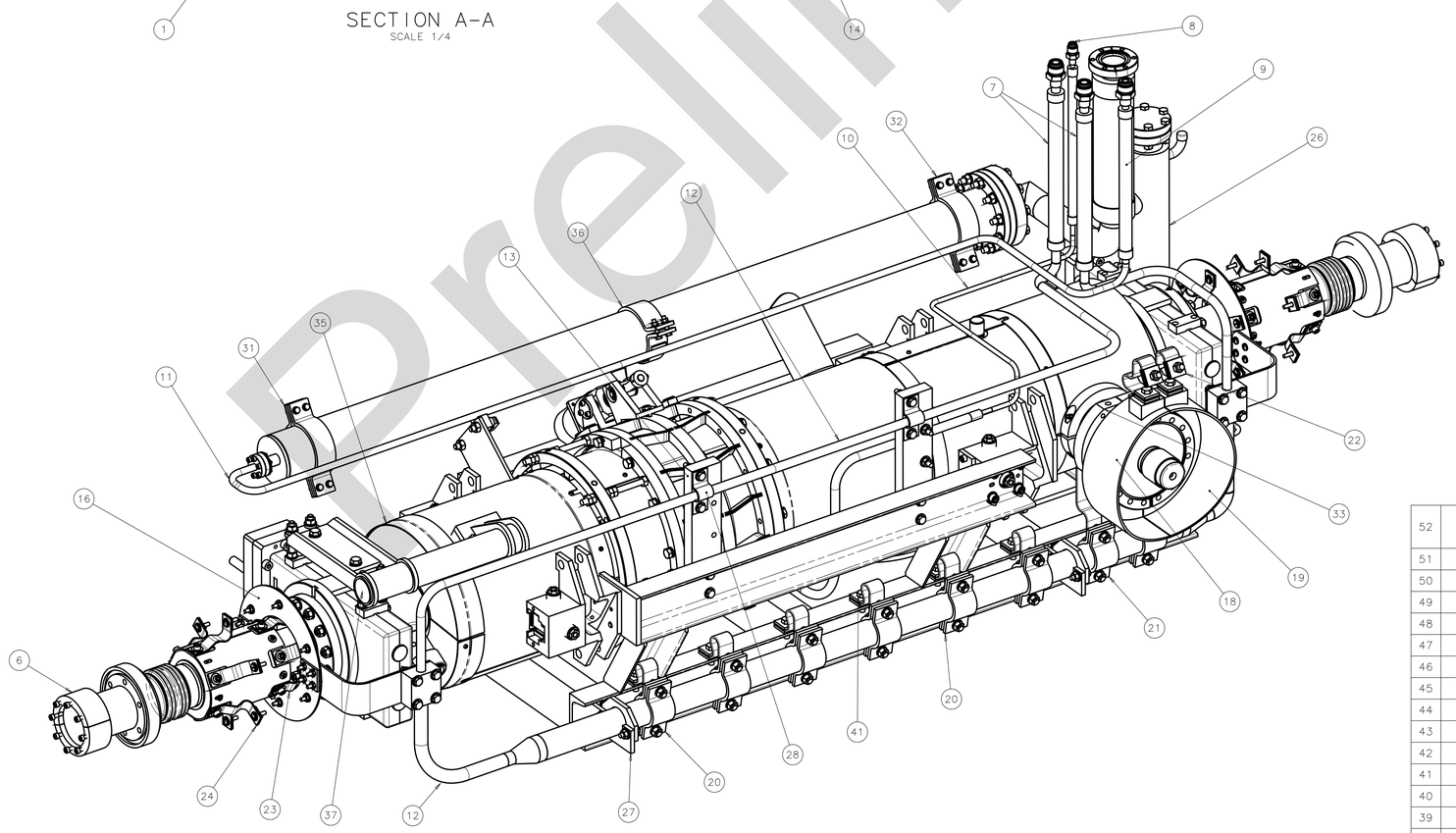

52	COML	GASKET, ZCR METAL, .22"ID .49"OD HYLOK P/N H-ZGSK-4-316L	1
51	COML	SHLDR SCR 6-32 X .125" 5.32"DIA	4
50	COML	WASHER FLAT NO 6-B SS18-8	12
49	COML	SHCS 6-32 X .50" SS316	12
48	COML	NUT HEX 1/4-20 SS18-8	22
47	COML	WSHR FLAT 1/4"ID 5/8"OD SS18-8	44
46	COML	HHCS 1/4-20 X 1.50" SS18-8	10
45	COML	HHCS 1/4-28 X 1.00" SS18-8	4
44	COML	NUT HEX 5/16-18 SS18-8	11
43	COML	WSHR FLAT 5/16"ID 5/8"OD SS18-8	44
42	COML	HHCS 5/16-24 X 2.25" SS18-8	11
41	COML	SHCS 5/16-18 X 1.00" SS18-8	14
40	COML	SHCS 5/16-18 X .75" SS18-8	16
39	COML	PLATE NUT NOR-CAL #NP-075	6
38	COML	SHCS 8-32 X 1.00" SS18-8	12

ITEM	PART NO.	DESCRIPTION OR SIZE	QTY.
37	D*0880215	VAT SUPPORT CAVITY KIT	1
36	D*0899145	BRAID TUNER-MOTOR KIT	1
35	D*0898215	SHIELD CAVITY VAT ASSY	1
34	D*0902125	SHIELD CAVITY MAGNET-1 ASSY	1
33	D*0729431	INTERCEPT 4-5K MC	1
32	D*0899105	BRAIDS HOM 2 ASSEMBLY	1
31	D*0899075	BRAIDS HOM 1 ASSEMBLY	1
30	MB-393309	GASKET CF OFHC COPPER 1.33" OD	2
29	MB-393138	GASKET CF OFHC COPPER 4-5/8"OD	1
28	MB-484713	CLAMP HEATSINK 1-5 ID	3
27	MB-484712	SUPPORT 5K PIPE KIT	2
26	MD-484711	HE VESSEL LEVEL INDICATOR ASSY	1
25	MB-484710	HELIUM FILL PORT ASSEMBLY	
24	MB-484709	BP COOLING BRAID 80K KIT	12
23	MB-484708	BP COOLING BRAID 5K KIT	12
22	MB-484707	BRAID 80K TO MC KIT	2
21	MC-484706	BRAID 5K TO MC KIT	2
20	MB-484705	BRAID 5K TO FRAME KIT	6
19	MD-484704	80K HEAT-SHIELD MC B	1
18	MD-484703	80K HEAT-SHIELD MC A	1
17	MC-484702	COMPENSATOR VIBRATION HALF	4
16	MC-484701	ENDCAP 5K SHIELD KIT	2
15	MB-484700	SPACER TI	1
14	MC-484699	CC1 VAT SUPPORT CAVITY KIT	1
13	MC-484698	SUPPORT 5K WARM-UP PIPING	2
12	ME-484697	CC1 5K PIPE ASSEMBLY	1
11	MD-484696	PIPE 2 PHASE 2K-LINE ASSY	1
10	MD-484695	TUBE WARM-UP COOL-DOWN ASSEMBLY	1
9	MB-484694	HOSE - MASTERFLEX 0.375 WELDMENT	1
8	MB-484693	HOSE - MASTERFLEX 0.25 WELDMENT	1
7	MB-484692	HOSE-5K MASTERFLEX 0.50 WLDMT	2
6	ME-484691	CC1 STRING ASSEMBLY	1
5	MC-484690	HOUSING NEEDLE BEARING-4 KIT	1
4	MC-484689	HOUSING NEEDLE BEARING-3 KIT	1
3	MC-484688	HOUSING NEEDLE BEARING-2 KIT	1
2	MC-484687	HOUSING NEEDLE BEARING-1 KIT	1
1	ME-484685	FRAME LOWER WELDMENT	1

PARTS LIST

UNLESS OTHERWISE SPECIFIED			
±	±	±	

1. BREAK ALL SHARP EDGES MAX.
2. DO NOT SCALE DRAWING.
3. DIMENSIONS BASED UPON
4. MAX. ALL MACH. SURFACES
5. DRAWING UNITS:

ORIGINATOR	Y.ORLOV	29-AUG-2012
DRAWN	J.KURNAT	29-AUG-2012
CHECKED		
APPROVED		
USED ON	ME-484684	
MATERIAL	SEE PARTS LIST	

FERMI NATIONAL ACCELERATOR LABORATORY
UNITED STATES DEPARTMENT OF ENERGY

ASTA - CAPTURE CAVITY 1
CC1-UPGRADE ASSEMBLY
COLDMASS-CC1 ASSEMBLY

SCALE	DRAWING NUMBER	SHEET	REV
1:4 & AS NOTED	3886.801-ME-484686	1 OF 1	

CREATED WITH : Ideas12NXSeries GROUP: TD/DDCIS-DESIGN-COMPUTING

Preliminary

REV	DESCRIPTION	DRAWN	DATE
		APPROVED	DATE
	ER# 10504 NEW RELEASE		

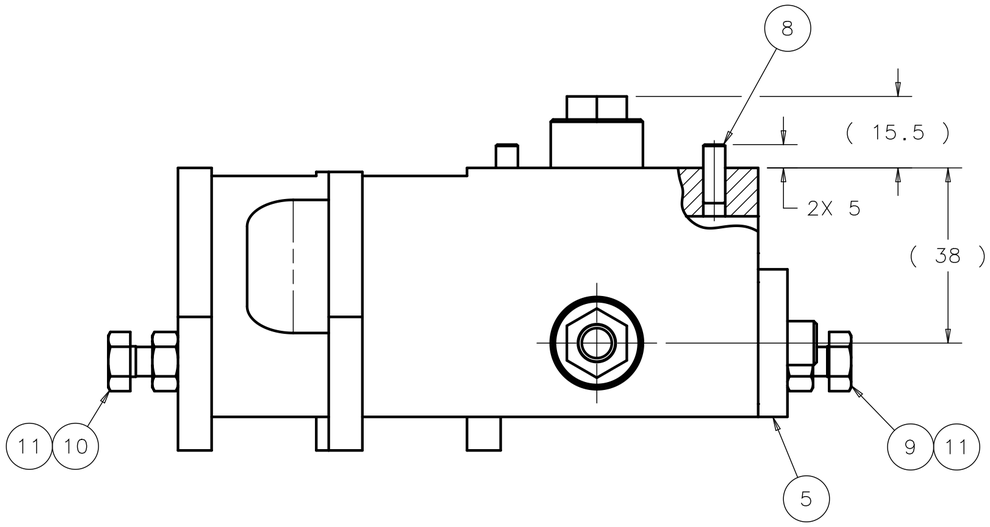

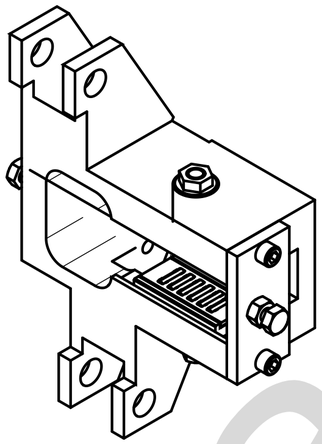

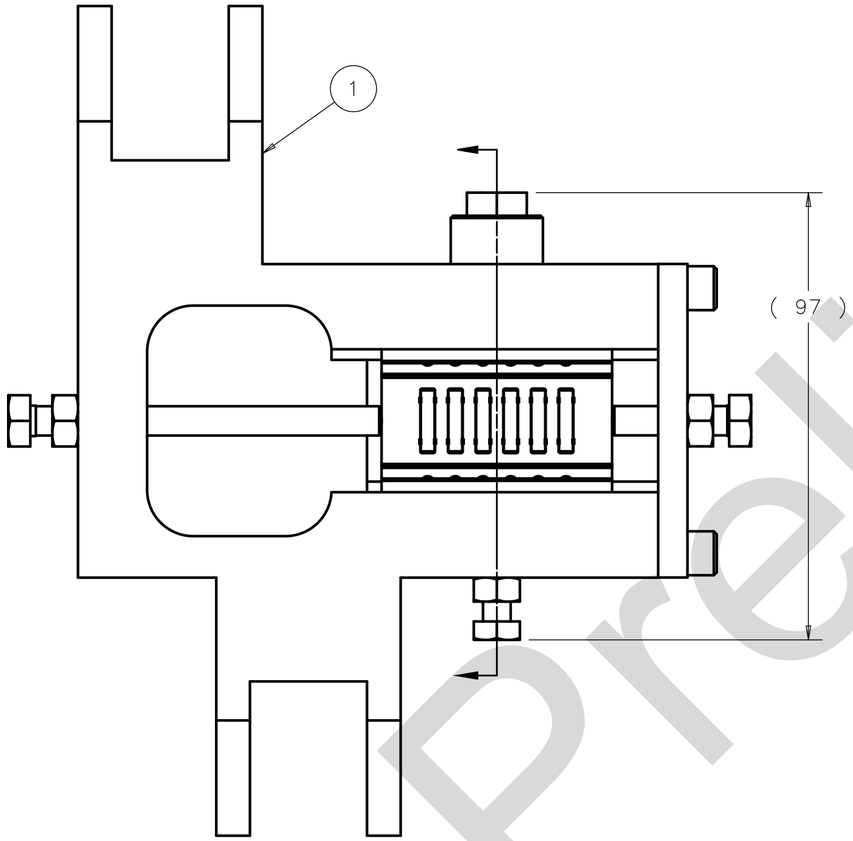

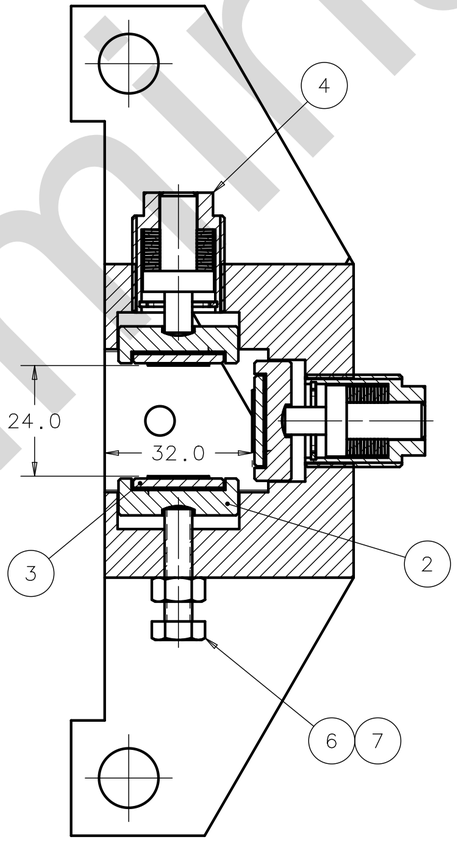

ITEM	PART NO.	DESCRIPTION OR SIZE	QTY.
11	COM'L	HEX NUT, 1/4"-20, 18-8 S.S.	2
10	COM'L	HHS, 1/4"-20 X 3.0", 18-8 S.S	1
9	COM'L	HHS, 1/4"-20 X 1.0", 18-8 S.S	1
8	COM'L	PIN DOWEL,Ø3/16" X 1/2"LG,316 S.S MCMASTER# 97395A461 OR EQUIV.	2
7	COM'L	HEX NUT M6 X 1.0, 316L S.S.	1
6	740361	HEX HEAD BOLT SPECIAL M6 X 1	1
5		PLATE STOP CAVITY LAG	1
4	885715	SPRING JACK ASSY	2
3	885695	NEEDLE SUPPORT-50mm ASSEMBLY	3
2	885675	ABUTMENT BEARING-50mm	3
1	ME-484624	HOUSING-NEEDLE BEARINGS-1	1

PARTS LIST

UNLESS OTHERWISE SPECIFIED			ORIGINATOR	Y.ORLOV	13-AUG-2012
.X	.XX	ANGLES	DRAWN	F.MCCONOLOGUE	13-AUG-2012
± 0.5	± --	± --	CHECKED		
			APPROVED		

1. BREAK ALL SHARP EDGES .75 MAX.
2. DO NOT SCALE DRAWING.
3. DIMENSIONS BASED UPON ASME Y14.5M-1994
4. MAX. ALL MACH. SURFACES 3.2
5. DRAWING UNITS: MM

USED ON: ME-484686

MATERIAL: SEE PARTS LIST

FERMI NATIONAL ACCELERATOR LABORATORY
UNITED STATES DEPARTMENT OF ENERGY

ASTA - CAPTURE CAVITY 1 COLDMASS - CC1 ASSEMBLY HOUSING NEEEDLE BEARING-1 KIT

SCALE	DRAWING NUMBER	SHEET	REV
1:1	3886.801-MC-484687	1 OF 1	

CREATED WITH : Ideas12NXSeries | GROUP: TD/DDCIS-DESIGN-COMPUTING

NOTES (UNLESS OTHERWISE SPECIFIED):

1. ASSEMBLY MUST BE FREE OF DIRT, GREASE, OIL AND CHIPS.
2. KIT SHOWN, MUST BE DISASSEMBLED PRIOR TO INSTALLATION IN PARENT ASSEMBLY.

Preliminary

REV	DESCRIPTION	DRAWN	DATE
		APPROVED	DATE
	ER# 10504 NEW RELEASE		

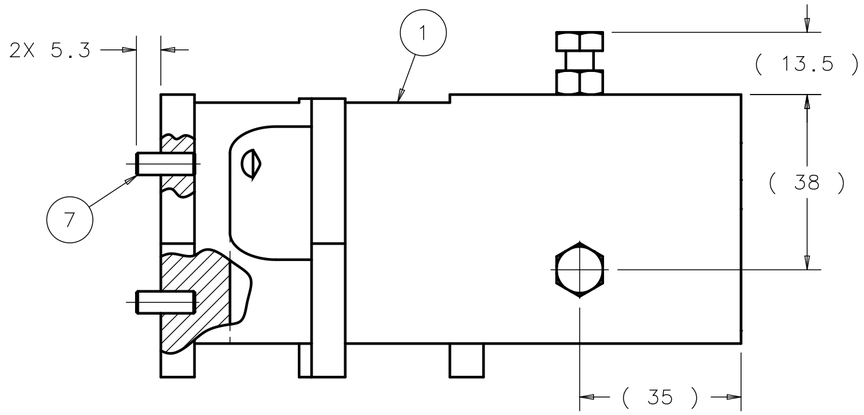

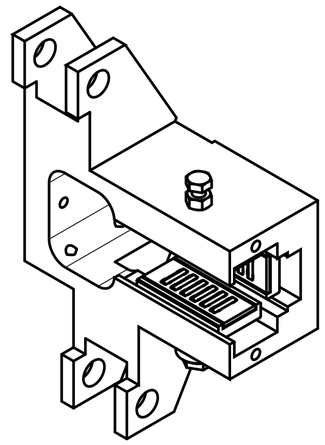

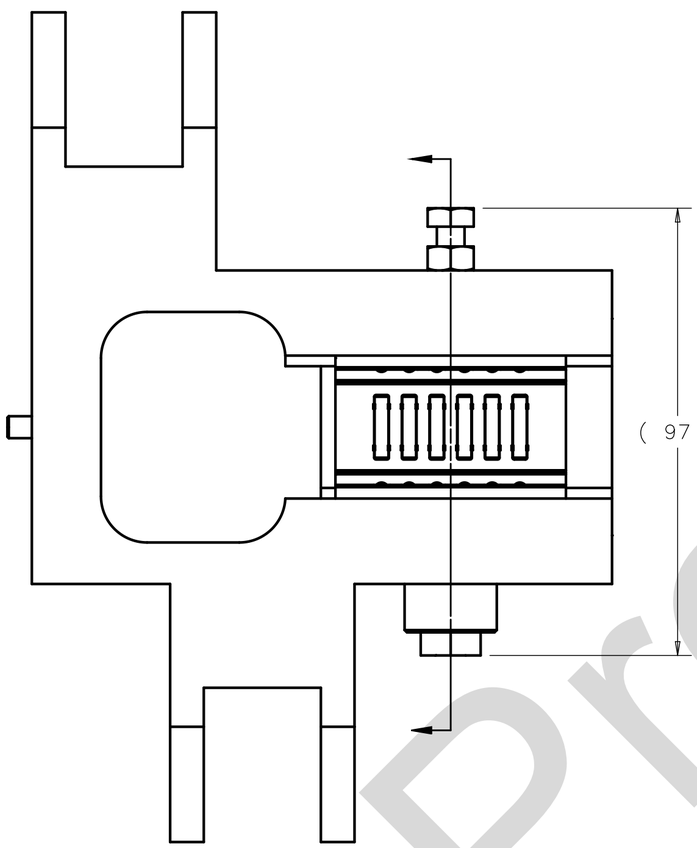

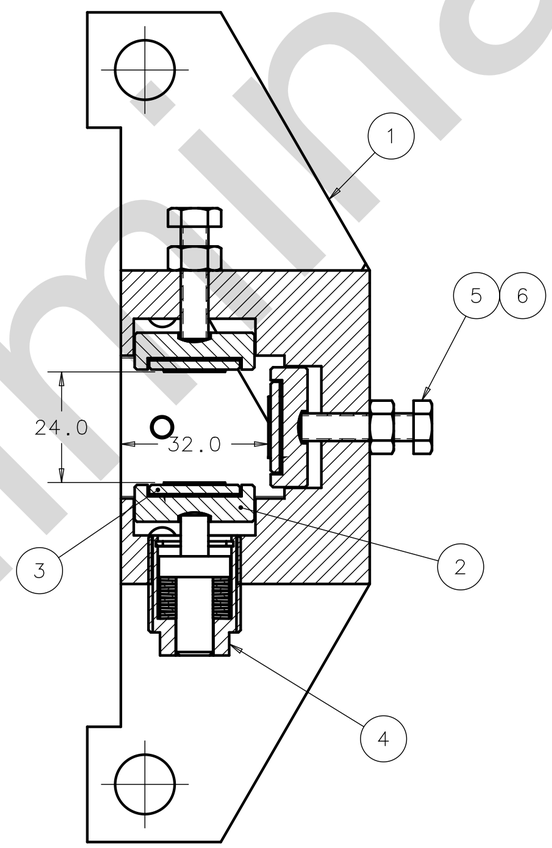

ITEM	PART NO.	DESCRIPTION OR SIZE	QTY.
7	COM'L	PIN DOWEL,Ø3/16" X 1/2"LG,316 S.S MCMASTER# 97395A461 OR EQUIV.	2
6	COM'L	HEX NUT M6 X 1.0, 316L S.S.	2
5	740361	HEX HEAD BOLT SPECIAL M6 X 1	2
4	885715	SPRING JACK ASSY	1
3	885695	NEEDLE SUPPORT-50mm ASSEMBLY	3
2	885675	ABUTMENT BEARING-50mm	3
1	ME-484625	HOUSING-NEEDLE BEARINGS-2	1

PARTS LIST

UNLESS OTHERWISE SPECIFIED			ORIGINATOR	Y.ORLOV	13-AUG-2012
.X	.XX	ANGLES	DRAWN	F.MCCONOLOGUE	13-AUG-2012
± 0.5	± --	± --	CHECKED		
			APPROVED		

1. BREAK ALL SHARP EDGES .75 MAX.
2. DO NOT SCALE DRAWING.
3. DIMENSIONS BASED UPON ASME Y14.5M-1994
4. MAX. ALL MACH. SURFACES 3.2
5. DRAWING UNITS: MM

USED ON: ME-484686

MATERIAL: SEE PARTS LIST

FERMI NATIONAL ACCELERATOR LABORATORY
UNITED STATES DEPARTMENT OF ENERGY

ASTA - CAPTURE CAVITY 1 COLDMASS - CC1 ASSEMBLY HOUSING NEEDLE BEARING-2 KIT

SCALE	DRAWING NUMBER	SHEET	REV
1:1	3886.801-MC-484688	1 OF 1	

CREATED WITH : Ideas12NXSeries GROUP: TD/DDCIS-DESIGN-COMPUTING

NOTES (UNLESS OTHERWISE SPECIFIED):

1. ASSEMBLY MUST BE FREE OF DIRT, GREASE, OIL AND CHIPS.
2. KIT SHOWN, MUST BE DISASSEMBLED PRIOR TO INSTALLATION IN PARENT ASSEMBLY.

Preliminary

REV	DESCRIPTION	DRAWN	DATE
		APPROVED	DATE
	ER# 10504 NEW RELEASE		

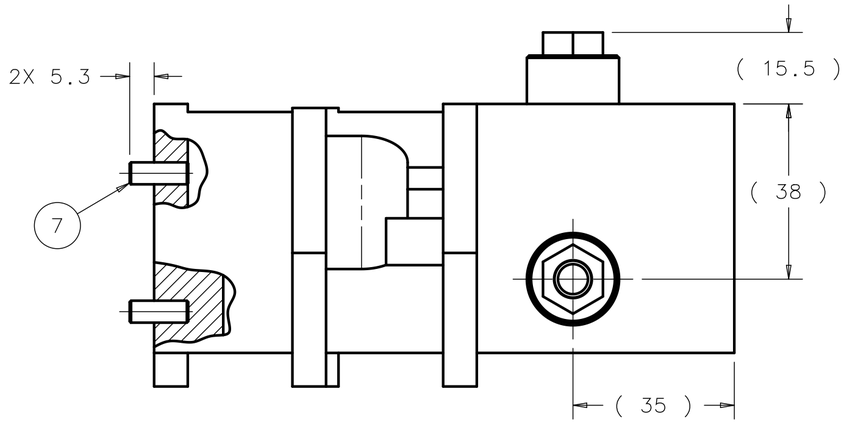

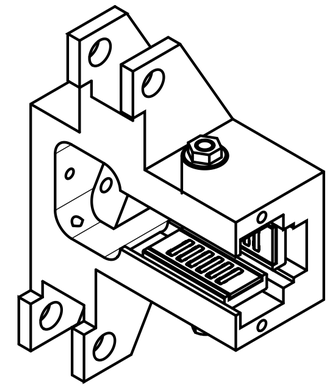

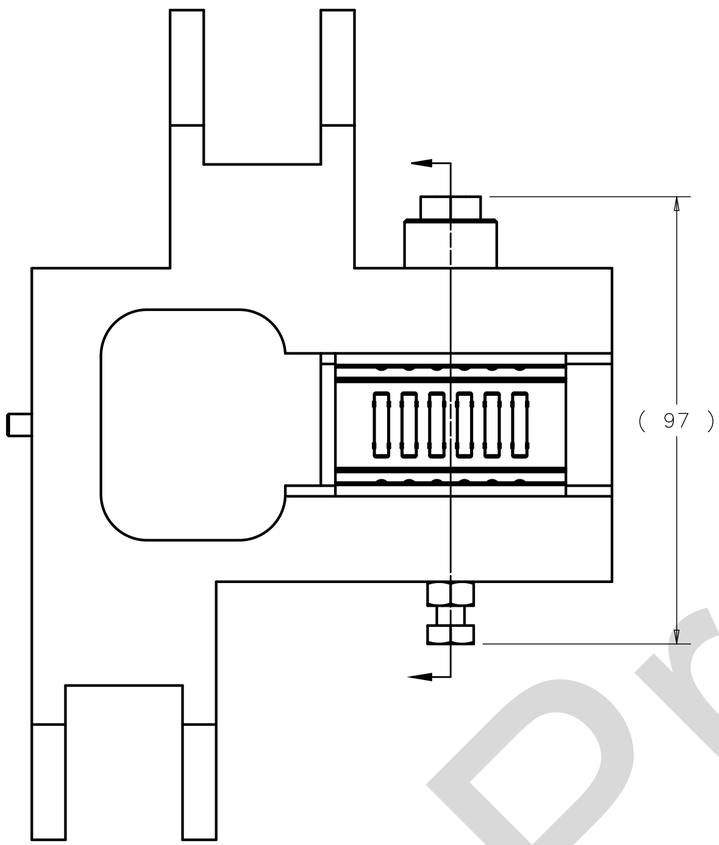

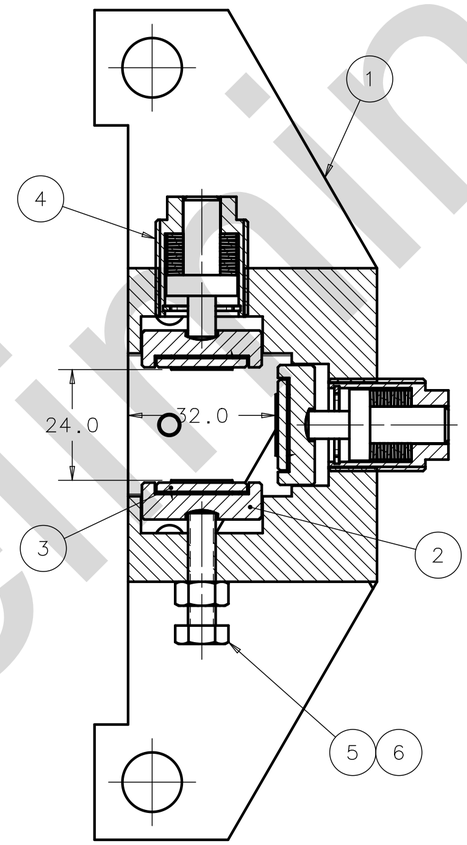

ITEM	PART NO.	DESCRIPTION OR SIZE	QTY.
7	COM'L	PIN DOWEL,ø3/16" X 1/2"LG,316 S.S MCMASTER# 97395A461	2
6	COM'L	HEX NUT M6 X 1.0, 316L S.S.	1
5	740361	HEX HEAD BOLT SPECIAL M6 X 1	1
4	885715	SPRING JACK ASSY	2
3	885695	NEEDLE SUPPORT-50mm ASSEMBLY	3
2	885675	ABUTMENT BEARING-50mm	3
1	ME-484626	HOUSING-NEEDLE BEARINGS-3	1

PARTS LIST

UNLESS OTHERWISE SPECIFIED			ORIGINATOR	Y.ORLOV	13-AUG-2012
.X	.XX	ANGLES	DRAWN	F.MCCONOLOGUE	13-AUG-2012
± 0.5	± --	± --	CHECKED		
			APPROVED		

1. BREAK ALL SHARP EDGES .75 MAX.
2. DO NOT SCALE DRAWING.
3. DIMENSIONS BASED UPON ASME Y14.5M-1994
4. MAX. ALL MACH. SURFACES 3.2
5. DRAWING UNITS: MM

USED ON: ME-484686

MATERIAL: SEE PARTS LIST

FERMI NATIONAL ACCELERATOR LABORATORY
UNITED STATES DEPARTMENT OF ENERGY

ASTA - CAPTURE CAVITY 1 COLDMASS - CC1 ASSEMBLY HOUSING NEEDLE BEARINGS-3 KIT

SCALE	DRAWING NUMBER	SHEET	REV
1:1	3886.801-MC-484689	1 OF 1	

CREATED WITH : Ideas12NXSeries GROUP: TD/DDCIS-DESIGN-COMPUTING

NOTES (UNLESS OTHERWISE SPECIFIED):

1. ASSEMBLY MUST BE FREE OF DIRT, GREASE, OIL AND CHIPS.
2. KIT SHOWN, MUST BE DISASSEMBLED PRIOR TO INSTALLATION IN PARENT ASSEMBLY.

Preliminary

REV	DESCRIPTION	DRAWN	DATE
		APPROVED	DATE
	ER# 10504 NEW RELEASE		

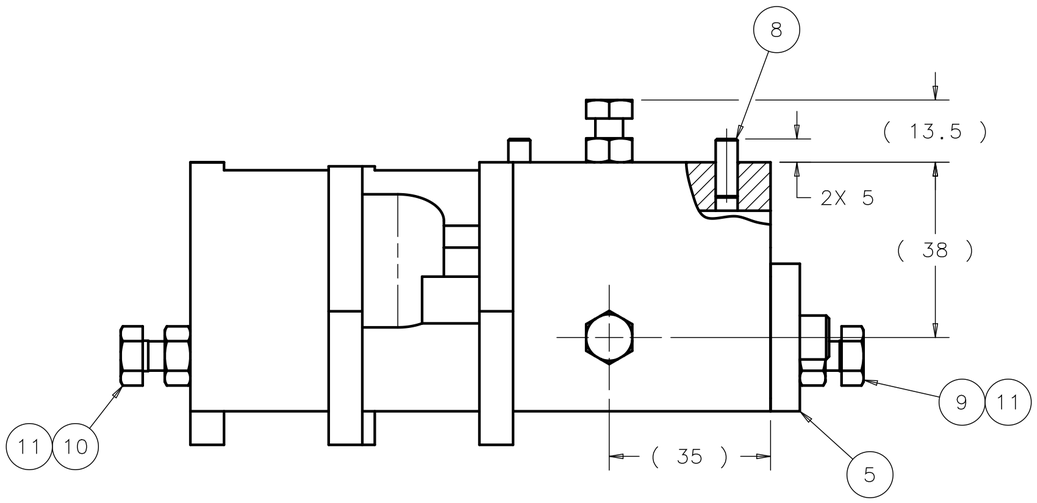

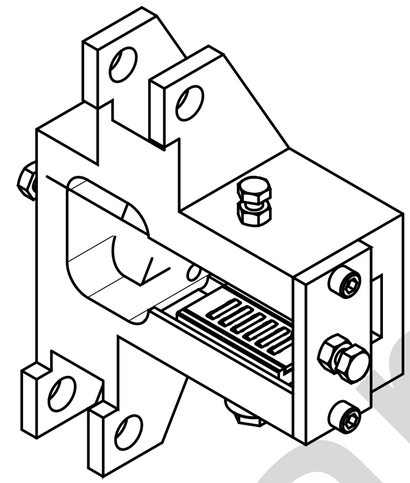

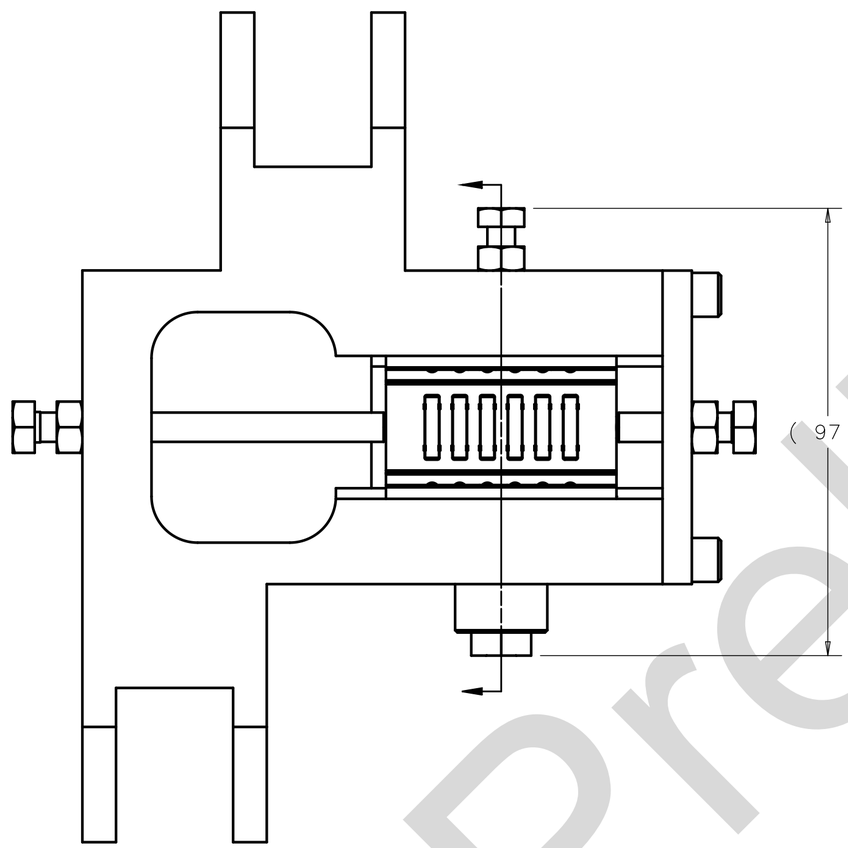

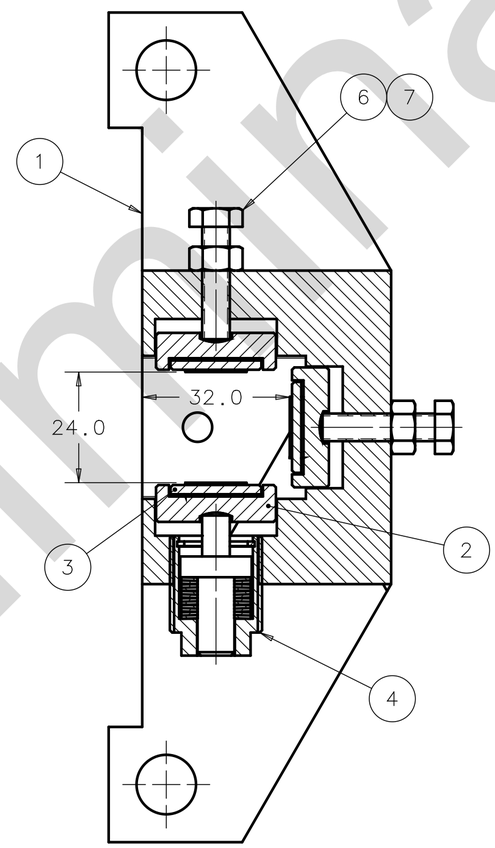

ITEM	PART NO.	DESCRIPTION OR SIZE	QTY.
11	COM'L	HEX NUT, 1/4"-20, 18-8L S.S.	2
10	COM'L	HHS, 1/4"-20 X 3.0", 18-8 S.S	1
9	COM'L	HHS, 1/4"-20 X 1.0", 18-8 S.S	1
8	COM'L	PIN DOWEL,Ø3/16" X 1/2"LG,316 S.S MCMASTER# 97395A461 OR EQUIV.	2
7	COM'L	HEX NUT M6 X 1.0, 316L S.S.	2
6	740361	HEX HEAD BOLT SPECIAL M6 X 1	2
5		PLATE STOP CAVITY LAG	1
4	885715	SPRING JACK ASSY	1
3	885695	NEEDLE SUPPORT-50mm ASSEMBLY	3
2	885675	ABUTMENT BEARING-50mm	3
1	ME-484627	HOUSING-NEEDLE BEARINGS-4	1

PARTS LIST

UNLESS OTHERWISE SPECIFIED			ORIGINATOR	Y.ORLOV	13-AUG-2012
.X	.XX	ANGLES	DRAWN	F.MCCONOLOGUE	13-AUG-2012
± 0.5	± --	± --	CHECKED		
			APPROVED		

1. BREAK ALL SHARP EDGES .75 MAX.
2. DO NOT SCALE DRAWING.
3. DIMENSIONS BASED UPON ASME Y14.5M-1994
4. MAX. ALL MACH. SURFACES 3.2
5. DRAWING UNITS: MM

USED ON: ME-484686

MATERIAL: SEE PARTS LIST

FERMI NATIONAL ACCELERATOR LABORATORY
UNITED STATES DEPARTMENT OF ENERGY

ASTA - CAPTURE CAVITY 1 COLDMASS - CC1 ASSEMBLY HOUSING NEEDLE BEARINGS-4 KIT

SCALE	DRAWING NUMBER	SHEET	REV
1:1	3886.801-MC-484690	1 OF 1	

CREATED WITH : Ideas12NXSeries GROUP: TD/DDCIS-DESIGN-COMPUTING

NOTES (UNLESS OTHERWISE SPECIFIED):

1. ASSEMBLY MUST BE FREE OF DIRT, GREASE, OIL AND CHIPS.
2. KIT SHOWN, MUST BE DISASSEMBLED PRIOR TO INSTALLATION IN PARENT ASSEMBLY.

Preliminary

REV	DESCRIPTION	DRAWN / APPROVED	DATE / DATE
-	ER #10504 NEW RELEASE		

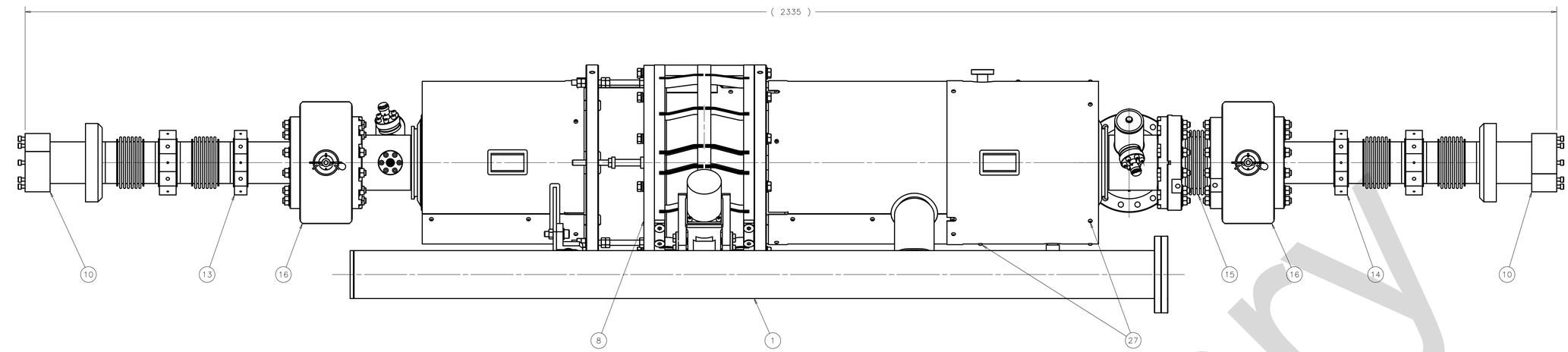

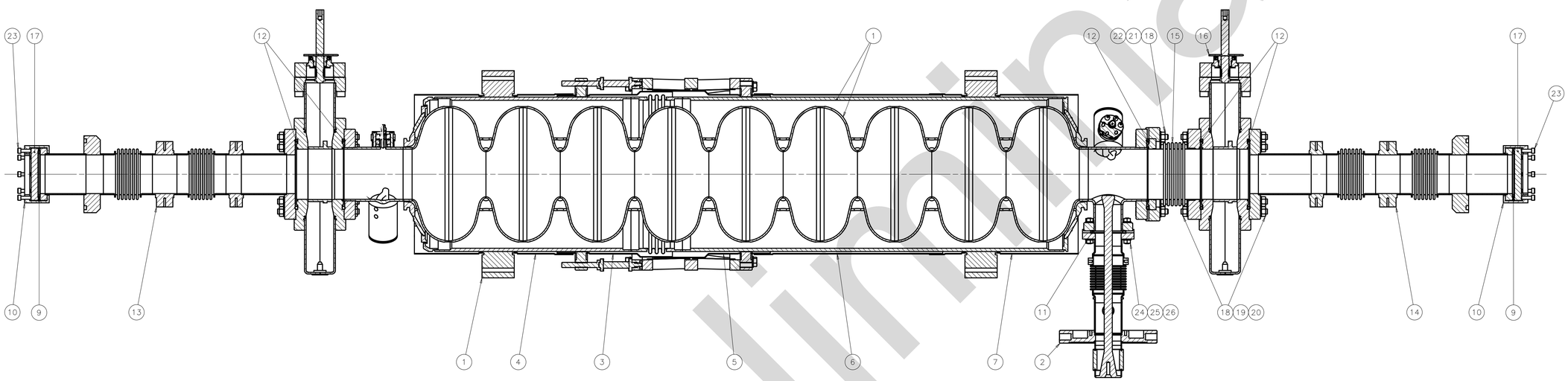

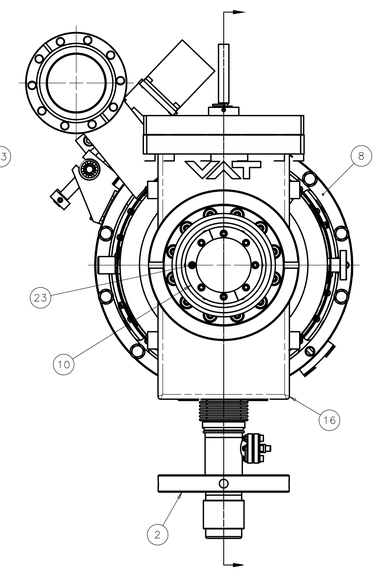

Preliminary

ITEM	PART NO.	DESCRIPTION OR SIZE	QTY.
16	COML	RF ALL METAL GATE VALVE VAT P/N 338854	2
15	MC-484585	BP BELLOWS WLDMT	1
14	MD-484491	DS VALVE TO MODULE WELDMENT	1
13	MD-484490	US VALVE TO MODULE WELDMENT	1
12	MB-439232	SEAL FOR NW78 FLANGE	5
11	MB-439231	SEAL FOR NW40 FLANGE	1
10	MB-439219	CAPTURE CAVITY VACUUM CLAMP END	2
9	MB-393138	GASKET-CF OFHC COPPER 4-5/8"OD	2
8	D*0886555	ASSY-PIEZO SLIMER TUNER INFN	1
7	D*0792835	1-3GHZ MAGNTC SHLD MAIN CPLR ASSY	1
6	D*0792825	1-3GHZ MAGNETIC SHIELD DWSTR ASSY	1
5	D*0792815	1-3GHZ MAGNETIC SHIELD BT2 ASSY	1
4	D*0792655	1-3GHZ MAGNETIC SHIELD UPSTR ASSY	1
3	D*0792635	1-3GHZ MAGNETIC SHIELD BT1 ASSY	1
2	D*0146500	COUPLER TTF III COLD ASSEMBLY	1
1	D*0872825	G3 He VESSEL RF CAVITY ASSEMBLY	1

PARTS LIST

ITEM	PART NO.	DESCRIPTION OR SIZE	QTY.
27	COML	SCR PH PHIL M3 X 0.5 X 4LG SS316L	16
26	COML	NUT HEX M6 X 1 X 6.5 SiBr	16
25	COML	WSHR FLAT 6.4 ID, 12 OD, SS316L	16
24	COML	ROD THRD M6 X 1 X 40LG SS316L	8
23	COML	SHCS #10-32 X 5/8" SS316L	16
22	COML	BOLT HH M8 X 1.25 X 45LG SS316L	12
21	COML	WASHER FLT M8 8.4x17x1.6 SS316L	12
20	COML	WASHER M8 X 16 X 1.6 SS316L	48
19	COML	SCREW SET M8X1.25 X 40.31 SS316L	48
18	COML	NUT HEX M8X1.25 X 40.31LG SiBr	60
17	COML	ROT FLANGE BLNK 4-5/8" SS316L	2

PARTS LIST

NOTES (UNLESS OTHERWISE SPECIFIED):

1. PART MUST BE FREE OF DIRT, GREASE, OIL AND CHIPS.
2. ITEMS #1 THRU #8, WITH DRAWING NUMBERS D*XXXXXX, EXIST WITHIN THE DESY ILC EDMS.

UNLESS OTHERWISE SPECIFIED
± ± ±
1. BREAK ALL SHARP EDGES MAX.
2. DO NOT SCALE DRAWING.
3. DIMENSIONS BASED UPON
4. MAX. ALL MACH. SURFACES
5. DRAWING UNITS:

ORIGINATOR	Y.ORLOV	16-AUG-2012
DRAWN	J.KURNAT	16-AUG-2012
CHECKED		
APPROVED		
USED ON	ME-484686	
MATERIAL	SEE PARTS LIST	

FERMI NATIONAL ACCELERATOR LABORATORY
UNITED STATES DEPARTMENT OF ENERGY

ASTA - CAPTURE CAVITY 1 COLDMASS CC1 STRING ASSEMBLY

SCALE	DRAWING NUMBER	SHEET	REV
3:8	3886.801-ME-484691	1 OF 1	

CREATED WITH : Ideas12NXSeries GROUP: TD/DDCIS-DESIGN-COMPUTING

Created: 12:04:17 on 04-09-12 (D-M-Y) By: kurnat State: 1-INITIAL

REV	DESCRIPTION	DRAWN	DATE
		APPROVED	DATE
-	ER #10504 NEW RELEASE		

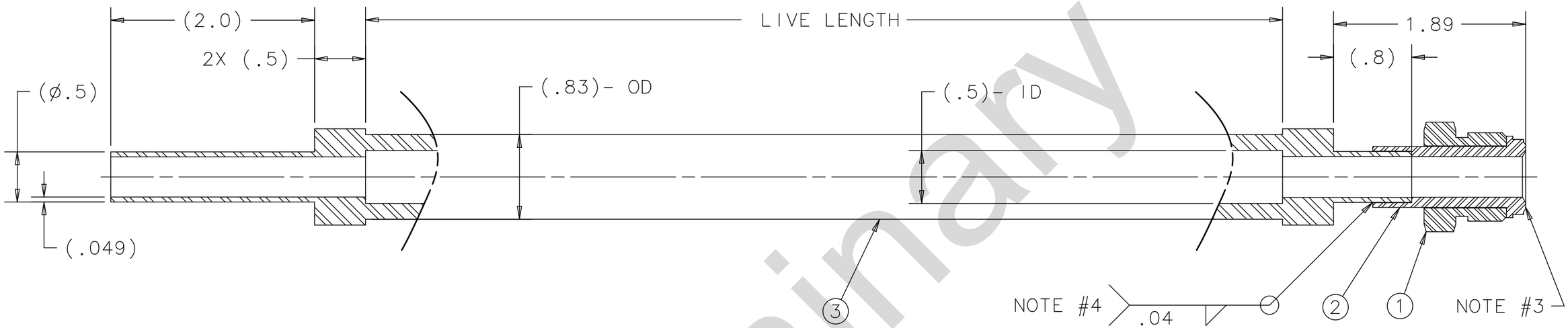

Preliminary

NOTES (UNLESS OTHERWISE SPECIFIED):

1. HOSE IS HOSEMASTER MASTERFEX: AF7550, 1/2"-ID. 9'-LIVE LENGTH.
   FITTINGS: TUBE 1/2-OD, .049"-WALL, 2" LENGTH, T304 FOR BOTH ENDS.
   HELIUM LEAK TEST: $2X10^{-9}$ ATM. CC/SEC.

2. WELDMENT MUST BE FREE OF DIRT, GREASE, OIL AND CHIPS.

3. SEALING SURFACES MUST BE FREE OF SCRATCHES AND NICKS
   WITH NO RADIAL SCORING.

4. ALL WELDS TO BE VACUUM LEAK TIGHT.
   LEAK TEST: NO LEAK SHALL BE DETECTABLE ON THE MOST SENSITIVE SCALE
   OF A HELIUM LEAK DETECTOR WITH A MINIMUM SENSITIVITY OF 10^{-9} ATM. CC/SEC.

5. ALL WELDS TO BE PRESSURE CHECKED TO 58 P.S.I.

3	COM'L	SEE NOTE #1	1
2	COM'L	HY-LOK SOCKET WELD GLAND H-ZGS-8	1
1	COM'L	HY-LOK MALE NUT H-ZMN-8	1

UNLESS OTHERWISE SPECIFIED	ORIGINATOR	Y.ORLOV	31-AUG-2012
	DRAWN	F.MCCONOLOGUE	31-AUG-2012
± ± ±	CHECKED		
1. BREAK ALL SHARP EDGES MAX. 2. DO NOT SCALE DRAWING. 3. DIMENSIONS BASED UPON	APPROVED		
4. MAX. ALL MACH. SURFACES √	USED ON	ME-484686	
5. DRAWING UNITS:	MATERIAL	SEE PARTS LIST	

FERMI NATIONAL ACCELERATOR LABORATORY
UNITED STATES DEPARTMENT OF ENERGY

ASTA - CAPTURE CAVITY 1 COLDMASS - CC1 ASSEMBLY HOSE-5K MASTERFLEX 0.50 WLDMT

SCALE	DRAWING NUMBER	SHEET	REV
1:1	3886.801-MB-484692	1 OF 1	

CREATED WITH : Ideas12NXSeries GROUP: TD/DDCIS-DESIGN-COMPUTING

REV	DESCRIPTION	DRAWN	DATE
		APPROVED	DATE
–	ER #10504 NEW RELEASE		

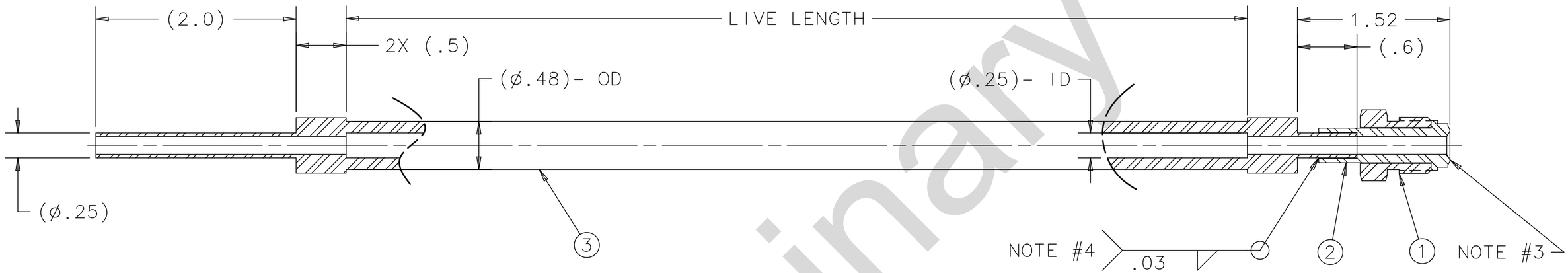

Preliminary

NOTES (UNLESS OTHERWISE SPECIFIED):

1. HOSE IS HOSEMASTER MASTERFEX: AF7550, 1/4"-ID. 9'-LIVE LENGTH.
   FITTINGS: TUBE 1/4"-OD, .035"-WALL, 2" LENGTH, T304 FOR BOTH ENDS.
   HELIUM LEAK TEST: $2X10^{-9}$ ATM. CC/SEC.

2. WELDMENT MUST BE FREE OF DIRT, GREASE, OIL AND CHIPS.

3. SEALING SURFACES MUST BE FREE OF SCRATCHES AND NICKS
   WITH NO RADIAL SCORING.

4. ALL WELDS TO BE VACUUM LEAK TIGHT.
   LEAK TEST: NO LEAK SHALL BE DETECTABLE ON THE MOST SENSITIVE SCALE
   OF A HELIUM LEAK DETECTOR WITH A MINIMUM SENSITIVITY OF 10^{-9} ATM. CC/SEC.

5. ALL WELDS TO BE PRESSURE CHECKED TO 58 P.S.I.

3	COM'L	SEE NOTE #1	1
2	COM'L	HY-LOK WELD GLAND H-ZGS-4S	1
1	COM'L	HY-LOK MALE NUT H-ZMN-4	1

UNLESS OTHERWISE SPECIFIED	ORIGINATOR	Y.ORLOV	31-AUG-2012
	DRAWN	F.MCCONOLOGUE	31-AUG-2012
± ± ±	CHECKED		
1. BREAK ALL SHARP EDGES MAX.	APPROVED		
2. DO NOT SCALE DRAWING. 3. DIMENSIONS BASED UPON	USED ON	ME-484686	
4. MAX. ALL MACH. SURFACES √	MATERIAL	SEE PARTS LIST	
5. DRAWING UNITS:			

FERMI NATIONAL ACCELERATOR LABORATORY
UNITED STATES DEPARTMENT OF ENERGY

ASTA - CAPTURE CAVITY 1 COLDMASS - CC1 ASSEMBLY HOSE - MASTERFLEX 0.25 WELDMENT

SCALE	DRAWING NUMBER	SHEET	REV
1:1	3886.801-MB-484693	1 OF 1	

CREATED WITH : Ideas12NXSeries GROUP: TD/DDCIS-DESIGN-COMPUTING

Created: 11:14:29 on 04-09-12 (D-M-Y) By: mccono State: 1-INITIAL

REV	DESCRIPTION	DRAWN	DATE
		APPROVED	DATE
–	ER #10504 NEW RELEASE		

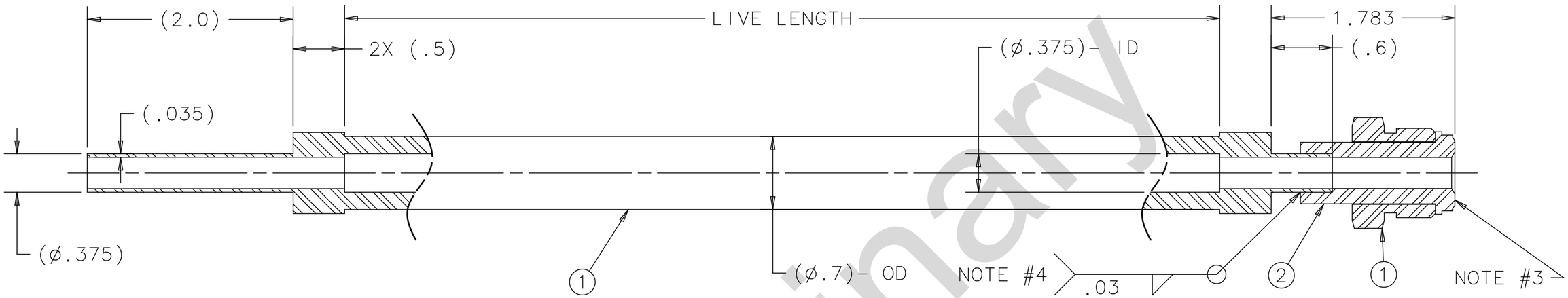

Preliminary

NOTES (UNLESS OTHERWISE SPECIFIED):

1. HOSE IS HOSEMASTER MASTERFEX: AF7550, 3/8"-ID. 9'-LIVE LENGTH.
   FITTINGS: TUBE 3/8"-OD, .035"-WALL, 2" LENGTH, 304L FOR BOTH ENDS.
   HELIUM LEAK TEST: $2X10^{-9}$ ATM. CC/SEC.

2. WELDMENT MUST BE FREE OF DIRT, GREASE, OIL AND CHIPS.

3. SEALING SURFACES MUST BE FREE OF SCRATCHES AND NICKS
   WITH NO RADIAL SCORING.

4. ALL WELDS TO BE VACUUM LEAK TIGHT.
   LEAK TEST: NO LEAK SHALL BE DETECTABLE ON THE MOST SENSITIVE SCALE
   OF A HELIUM LEAK DETECTOR WITH A MINIMUM SENSITIVITY OF 10^{-9} ATM. CC/SEC.

5. ALL WELDS TO BE PRESSURE CHECKED TO 58 P.S.I.

3	COM'L	SEE NOTE #1	1
2	COM'L	HY-LOK SOCKET WELD GLAND H-ZGS-6	1
1	COM'L	HY-LOK MALE NUT H-ZMN-8	1

UNLESS OTHERWISE SPECIFIED	ORIGINATOR	Y.ORLOV	31-AUG-2012
	DRAWN	F.MCCONOLOGUE	31-AUG-2012
± ± ±	CHECKED		
1. BREAK ALL SHARP EDGES MAX. 2. DO NOT SCALE DRAWING. 3. DIMENSIONS BASED UPON	APPROVED		
4. MAX. ALL MACH. SURFACES √	USED ON	ME-484686	
5. DRAWING UNITS:	MATERIAL	SEE PARTS LIST	

FERMI NATIONAL ACCELERATOR LABORATORY
UNITED STATES DEPARTMENT OF ENERGY

ASTA - CAPTURE CAVITY 1
COLDMASS - CC1 ASSEMBLY
HOSE - MASTERFLEX 0.375 WELDMENT

SCALE	DRAWING NUMBER	SHEET	REV
1:1	3886.801-MB-484694	1 OF 1	

CREATED WITH : Ideas12NXSeries | GROUP: TD/DDCIS-DESIGN-COMPUTING

Created: 11:14:48 on 04-09-12 (D-M-Y) By: mccono State: 1-INITIAL

REV	DESCRIPTION	DRAWN	DATE
		APPROVED	DATE
-	ER #10504 NEW RELEASE		

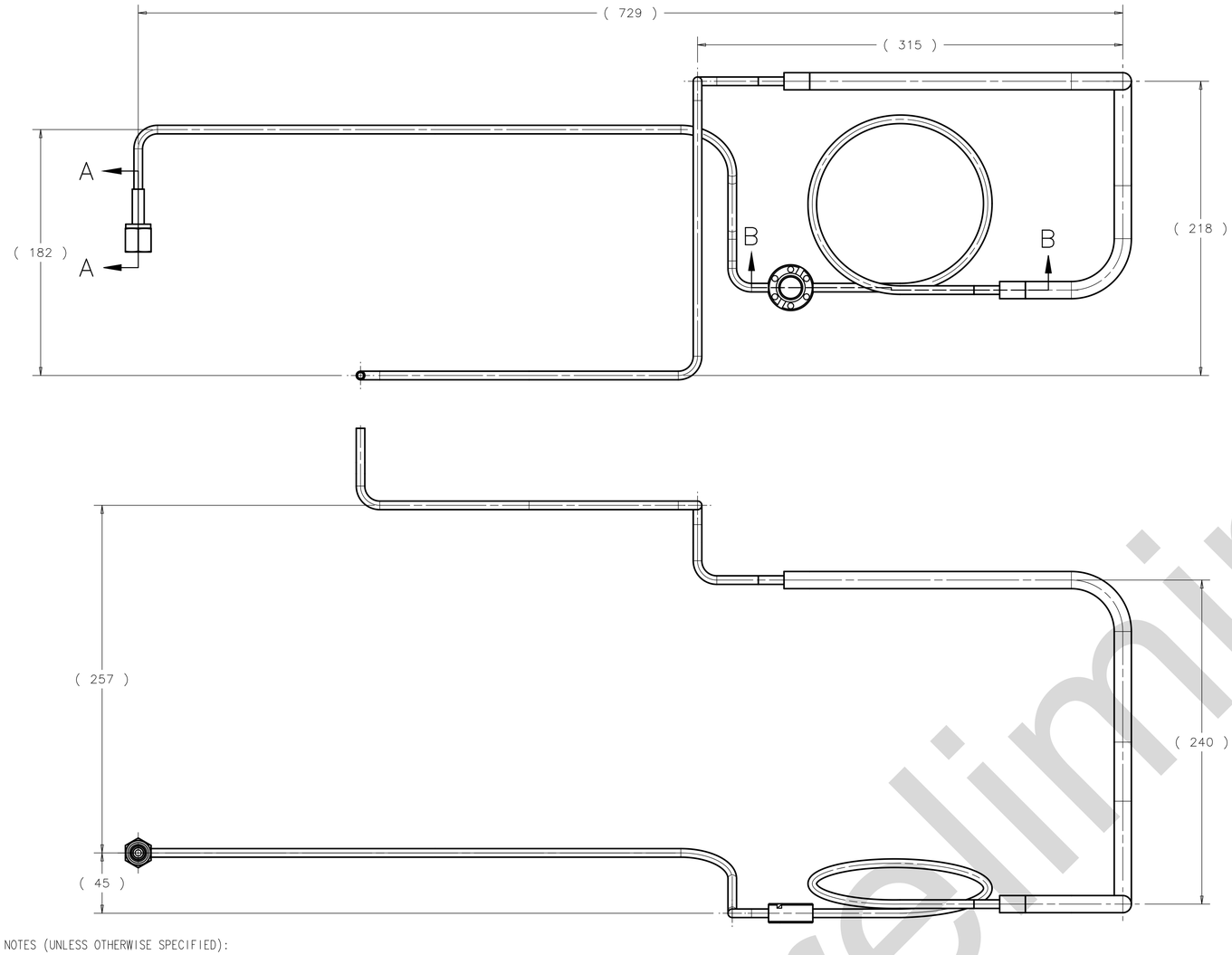

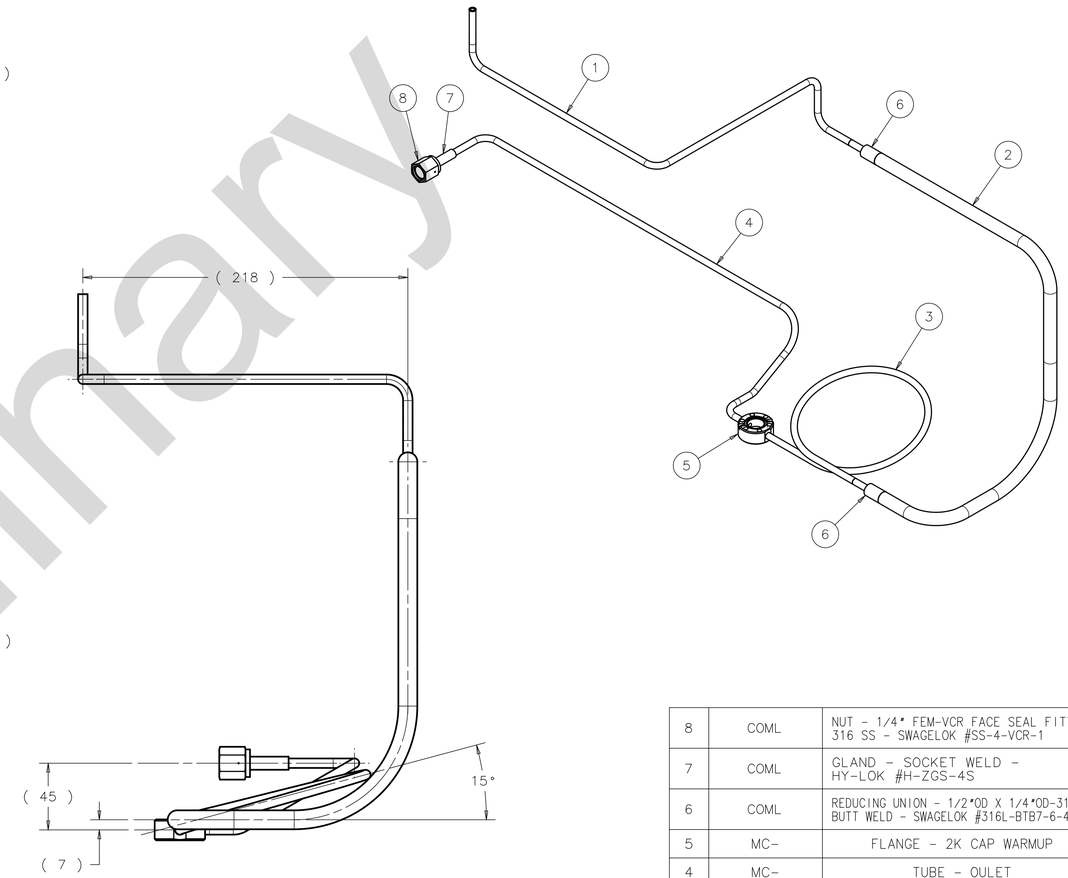

NOTES (UNLESS OTHERWISE SPECIFIED):

1. VENDOR MUST BE AN ASME CODE CERTIFIED PRESSURE PIPING COMPLIANT SHOP. ALL WELDS AND MANUFACTURING TOLERANCES MUST BE IN ACCORDANCE WITH THE LATEST ASME B31.3 CODE.
2. AS PART OF FERMILAB'S ACCEPTANCE CRITERIA, MATERIAL CERTIFICATIONS MUST BE SUPPLIED. THE WELDMENT WILL NOT BE ACCEPTED WITHOUT MATERIAL CERTIFICATIONS.
3. THE FOLLOWING DOCUMENTS SHALL BE SUPPLIED WITH DELIVERY AND WELDMENT.
   - A. WELD PROCEDURE SPECIFICATION (WPS).
   - B. PROCEDURE QUALIFICATION RECORDS (PQR).
   - C. WELDER PERFORMANCE QUALIFICATIONS (WPQ).
   - D. EXAMINATION REPORT.
4. ALL FILLET WELDS TO BE SMOOTH FOR COSMETIC APPEARANCE.
5. SEALING SURFACES MUST BE FREE OF SCRATCHES AND NICKS WITH NO RADIAL SCORING.
6. ALL WELDS TO BE VACUUM LEAK TIGHT. LEAK TEST: NO LEAK SHALL BE DETECTABLE ON THE MOST SENSITIVE SCALE OF A HELIUM LEAK DETECTOR WITH A MINIMUM SENSITIVITY OF 10^{-9} ATM. CC/SEC.
7. ALL WELDS TO BE PRESSURE CHECKED TO 58 P.S.I.
8. WELDMENT MUST BE FREE OF DIRT, GREASE, OIL AND CHIPS.
9. WELDMENT TO BE FREE OF ALL SHARP EDGES, CORNERS, AND BURRS.

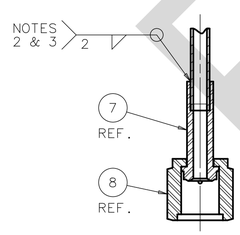

SECTION A-A
SCALE 1:1

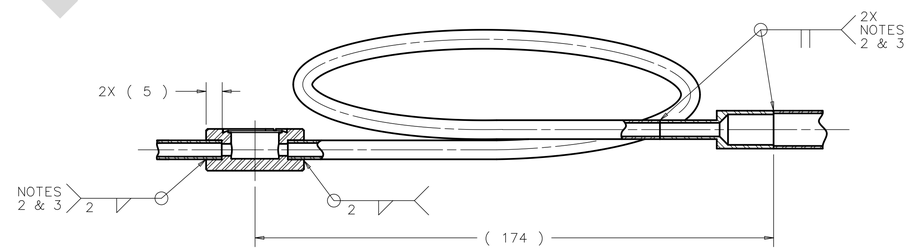

SECTION B-B
SCALE 1:1

ITEM	PART NO.	DESCRIPTION OR SIZE	QTY.
8	COML	NUT - 1/4" FEM-VCR FACE SEAL FITTING 316 SS - SWAGELOK #SS-4-VCR-1	1
7	COML	GLAND - SOCKET WELD - HY-LOK #H-ZGS-4S	1
6	COML	REDUCING UNION - 1/2"OD X 1/4"OD-316LSS BUTT WELD - SWAGELOK #316L-BTB7-6-4	2
5	MC-	FLANGE - 2K CAP WARMUP	1
4	MC-	TUBE - OULET	1
3	MB-	TUBE - LOOP - CAPILLARY CAVITY	1
2	MC-	TUBE - EXPANSION WARMUP CAP CAV	1
1	MC-	TUBE - INLET	1

PARTS LIST

UNLESS OTHERWISE SPECIFIED			ORIGINATOR	Y.ORLOV	21-AUG-2012
X	0.X	ANGLE	DRAWN	F.MCCONOLOGUE	22-AUG-2012
± --	± --	± 1°	CHECKED		
			APPROVED		

1. BREAK ALL SHARP EDGES -- MAX.
2. DO NOT SCALE DRAWING.
3. DIMENSIONS BASED UPON ASME Y14.5M-1994
4. MAX. ALL MACH. SURFACES
5. DRAWING UNITS: MM

USED ON: ME-484686

MATERIAL: SEE PARTS LIST

FERMI NATIONAL ACCELERATOR LABORATORY
UNITED STATES DEPARTMENT OF ENERGY

ASTA - CAPTURE CAVITY 1 COLDMASS - CC1 ASSEMBLY TUBE WARMUP COOL-DOWN ASSEMBLY

SCALE	DRAWING NUMBER	SHEET	REV
1:2 & AS NOTED	3886.801-MD-484695	1 OF 1	

CREATED WITH : Ideas12NXSeries GROUP: TD/DDCIS-DESIGN-COMPUTING

Preliminary

REV	DESCRIPTION	DRAWN	DATE
		APPROVED	DATE
-	ER #10504 NEW RELEASE		

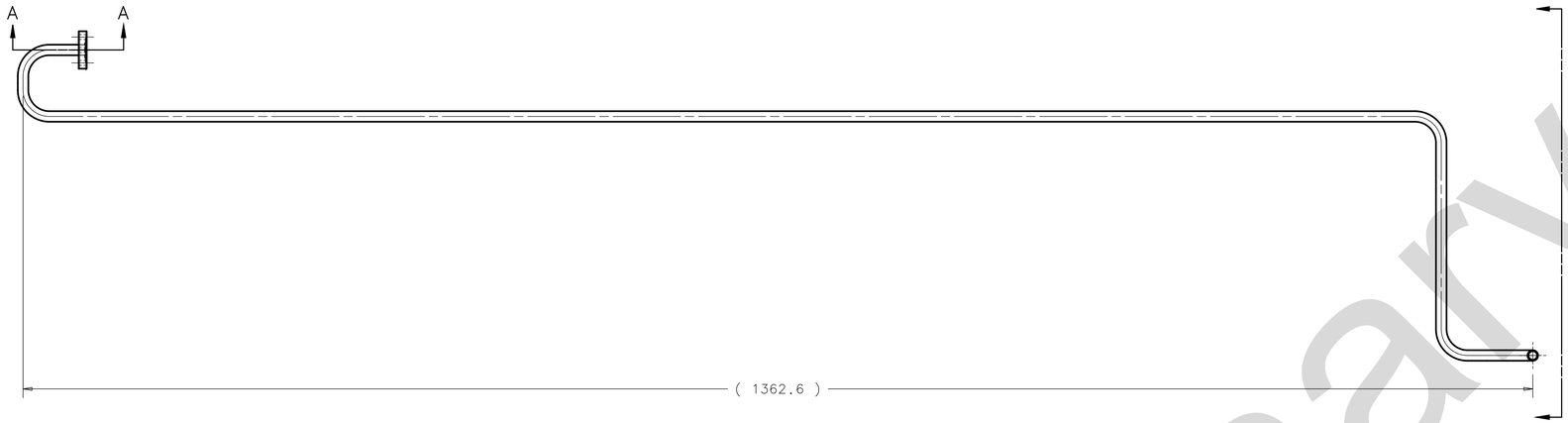

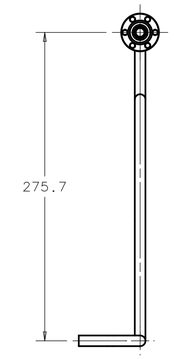

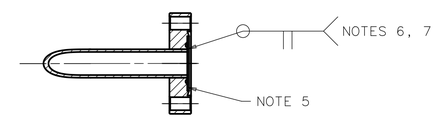

SECTION A-A
SCALE 1:1

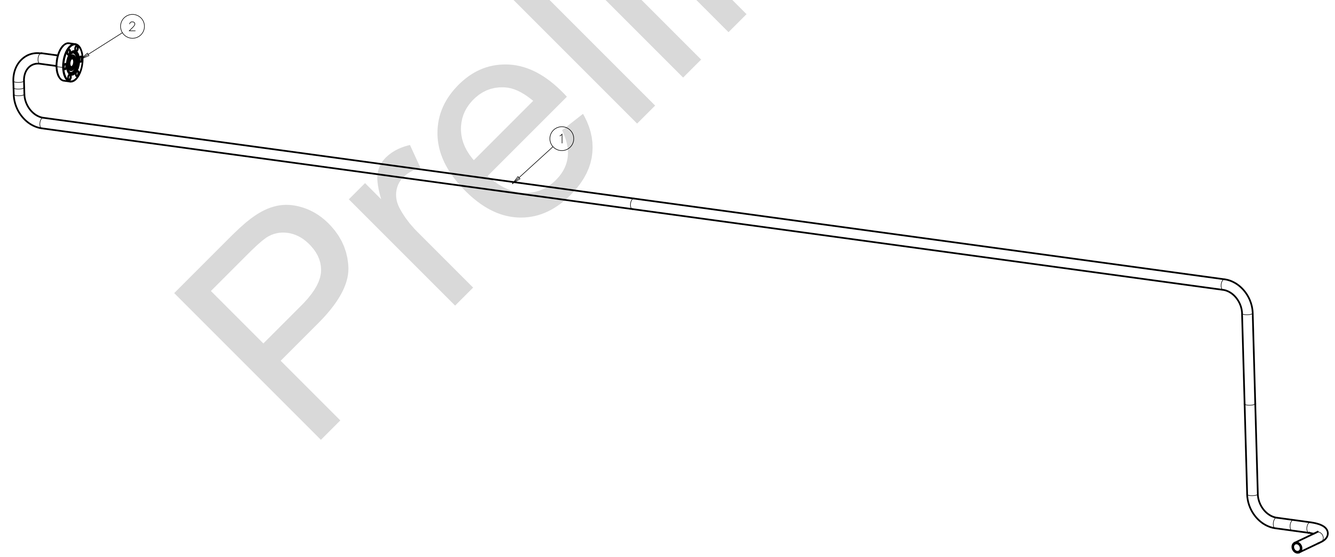

NOTES (UNLESS OTHERWISE SPECIFIED):

1. VENDOR MUST BE AN ASME CODE CERTIFIED PRESSURE PIPING COMPLIANT SHOP. ALL WELDS AND MANUFACTURING TOLERANCES MUST BE IN ACCORDANCE WITH THE LATEST ASME B31.3 CODE.
2. AS PART OF FERMILAB'S ACCEPTANCE CRITERIA, MATERIAL CERTIFICATIONS MUST BE SUPPLIED. THE WELDMENT WILL NOT BE ACCEPTED WITHOUT MATERIAL CERTIFICATIONS.
3. THE FOLLOWING DOCUMENTS SHALL BE SUPPLIED WITH DELIVERY AND WELDMENT.
   A. WELD PROCEDURE SPECIFICATION (WPS).
   B. PROCEDURE QUALIFICATION RECORDS (PQR).
   C. WELDER PERFORMANCE QUALIFICATIONS (WPQ).
   D. EXAMINATION REPORT.
4. ALL FILLET WELDS TO BE SMOOTH FOR COSMETIC APPEARANCE.
5. SEALING SURFACES MUST BE FREE OF SCRATCHES AND NICKS WITH NO RADIAL SCORING.
6. ALL WELDS TO BE VACUUM LEAK TIGHT.
   LEAK TEST: NO LEAK SHALL BE DETECTABLE ON THE MOST SENSITIVE SCALE OF A HELIUM LEAK DETECTOR WITH A MINIMUM SENSITIVITY OF 10^{-9} ATM. CC/SEC.
7. ALL WELDS TO BE PRESSURE CHECKED TO 58 P.S.I.
8. WELDMENT MUST BE FREE OF DIRT, GREASE, OIL AND CHIPS.
9. WELDMENT TO BE FREE OF ALL SHARP EDGES, CORNERS, AND BURRS.

ITEM	PART NO.	DESCRIPTION OR SIZE	QTY.
2	COML	FLG-CF NR 1-1/3" OD 3/8" ID MDC P/N 110002 OR EQUIV.	1
1		PIPE-2-PHASE 2K-LINE	1

PARTS LIST

UNLESS OTHERWISE SPECIFIED			ORIGINATOR	Y.ORLOV	22-AUG-2012
0.X	0.XX	ANGLE	DRAWN	F.MCCONOLOGUE	22-AUG-2012
± --	± --	±0.5°	CHECKED		
			APPROVED		

1. BREAK ALL SHARP EDGES 0.5 MAX.
2. DO NOT SCALE DRAWING.
3. DIMENSIONS BASED UPON ASME Y14.5M-1994
4. MAX. ALL MACH. SURFACES
5. DRAWING UNITS: MM

USED ON: ME-484686

MATERIAL: SEE PARTS LIST

FERMI NATIONAL ACCELERATOR LABORATORY
UNITED STATES DEPARTMENT OF ENERGY

ASTA - CAPTURE CAVITY 1 COLDMASS-CC1 ASSEMBLY PIPE-2-PHASE 2K-LINE ASSY

SCALE	DRAWING NUMBER	SHEET	REV
3:8 & NOTED	3886.801-MD-484696	1 OF 1	

CREATED WITH : Ideas12NXSeries | GROUP: TD/DDCIS-DESIGN-COMPUTING

Preliminary

REV	DESCRIPTION	DRAWN / APPROVED	DATE / DATE
-	ER #10504 NEW RELEASE		

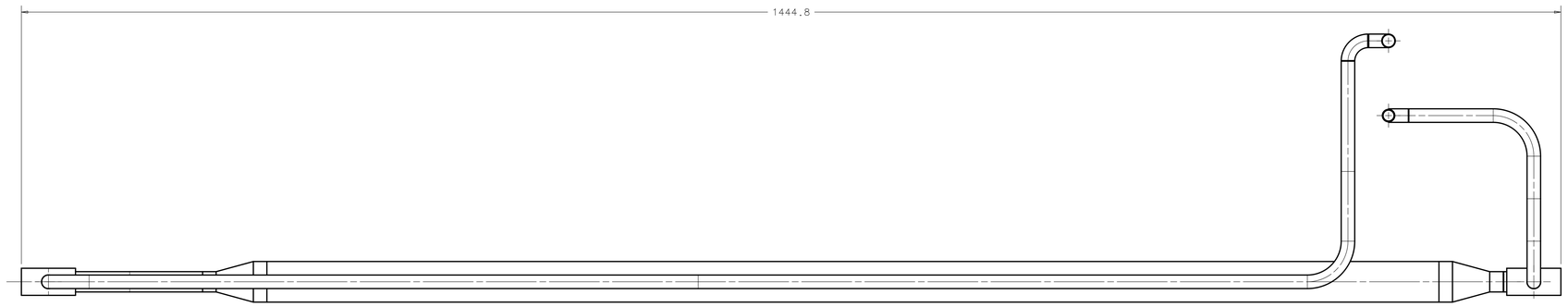

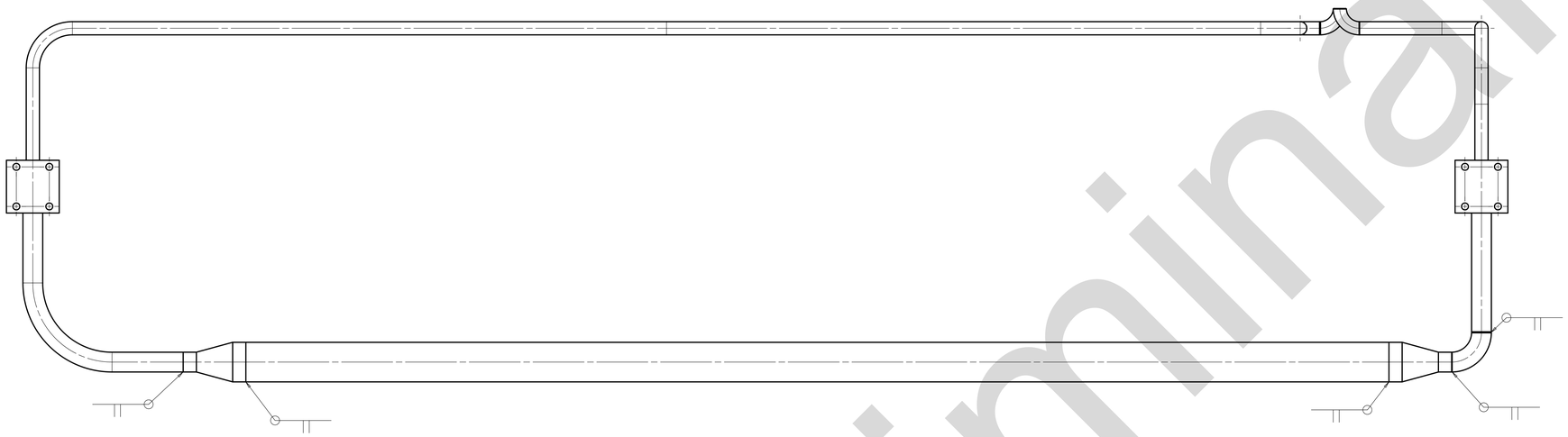

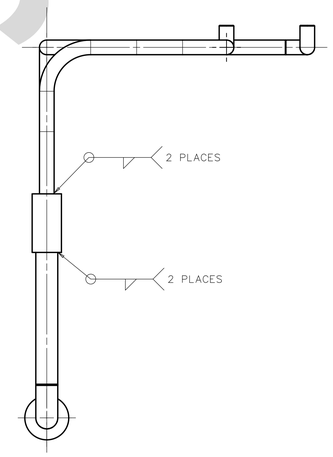

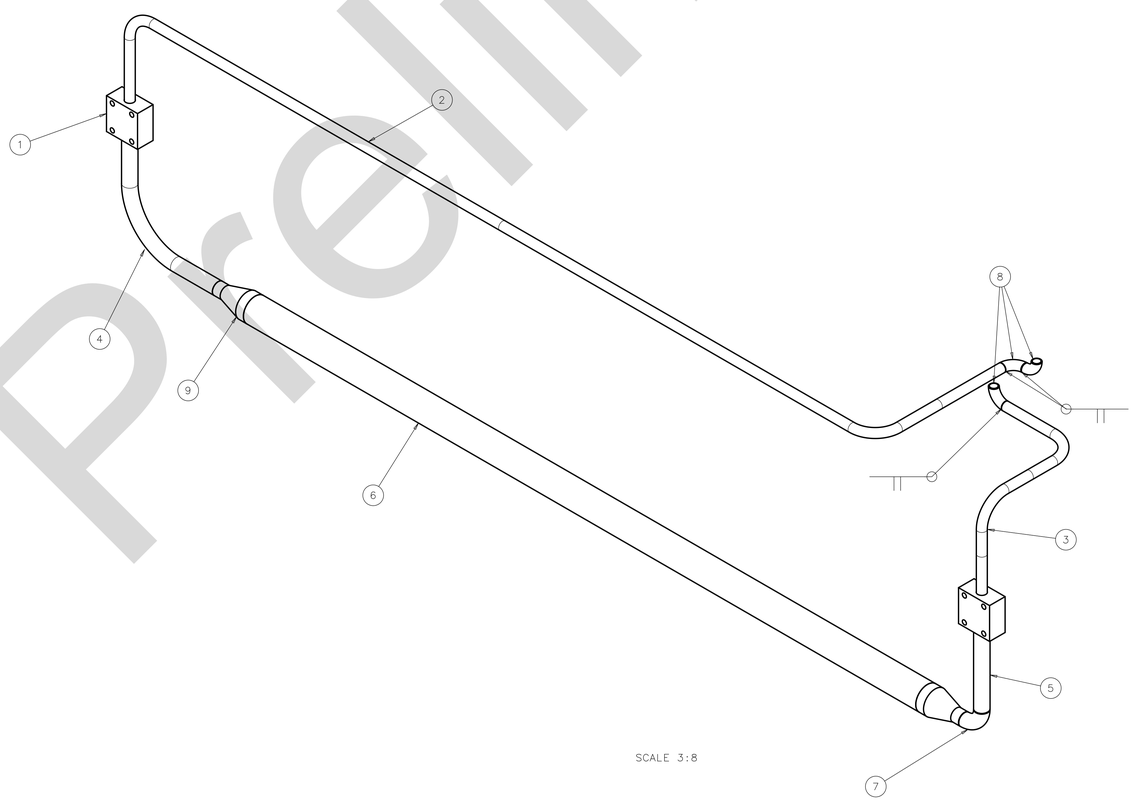

SCALE 3:8

NOTES (UNLESS OTHERWISE SPECIFIED):

1. VENDOR MUST BE AN ASME CODE CERTIFIED PRESSURE PIPING COMPLIANT SHOP. ALL WELDS AND MANUFACTURING TOLERANCES MUST BE IN ACCORDANCE WITH THE LATEST ASME B31.3 CODE.
2. AS PART OF FERMILAB'S ACCEPTANCE CRITERIA, MATERIAL CERTIFICATIONS MUST BE SUPPLIED. THE WELDMENT WILL NOT BE ACCEPTED WITHOUT MATERIAL CERTIFICATIONS.
3. THE FOLLOWING DOCUMENTS SHALL BE SUPPLIED WITH DELIVERY AND WELDMENT.
   A. WELD PROCEDURE SPECIFICATION (WPS).
   B. PROCEDURE QUALIFICATION RECORDS (PQR).
   C. WELDER PERFORMANCE QUALIFICATIONS (WPQ).
   D. EXAMINATION REPORT.
4. ALL FILLET WELDS TO BE SMOOTH FOR COSMETIC APPEARANCE.
5. SEALING SURFACES MUST BE FREE OF SCRATCHES AND NICKS WITH NO RADIAL SCORING.
6. ALL WELDS TO BE VACUUM LEAK TIGHT.
   LEAK TEST: NO LEAK SHALL BE DETECTABLE ON THE MOST SENSITIVE SCALE OF A HELIUM LEAK DETECTOR WITH A MINIMUM SENSITIVITY OF 10^{-9} ATM. CC/SEC.
7. ALL WELDS TO BE PRESSURE CHECKED TO 58 P.S.I.
8. WELDMENT MUST BE FREE OF DIRT, GREASE, OIL AND CHIPS.
9. WELDMENT TO BE FREE OF ALL SHARP EDGES, CORNERS, AND BURRS.

ITEM	PART NO.	DESCRIPTION OR SIZE	QTY.
9	COML	REDUCER CONICAL 1-1/2" TO 3/4" LESKER B-31W150-075 OR EQUIV.	2
8	COML	1/2" VACUUM FITTING 90 ELBOW LESKER G-2WC-050 OR EQUIV.	3
7	COML	3/4" VACUUM FITTING 90 ELBOW LESKER G-2WC-075 OR EQUIV.	1
6	COML	1-1/2" 5K TUBE 1100 LG	1
5	COML	3/4" 5K TUBE3 133.4 LG	1
4		TUBE 3/4" OD .035" WALL 316SS	1
3		TUBE 1/2" OD .035" WALL 316SS-1	1
2		TUBE 1/2" OD .035" WALL 316SS	1
1		PLATE REDUCER	2

PARTS LIST

UNLESS OTHERWISE SPECIFIED			ORIGINATOR	Y.ORLOV	21-AUG-2012
0.X	0.XX	ANGLE	DRAWN	F.MCCONOLOGUE	21-AUG-2012
± 0.5	± - -	±0.5°	CHECKED		
			APPROVED		

1. BREAK ALL SHARP EDGES MAX.
2. DO NOT SCALE DRAWING.
3. DIMENSIONS BASED UPON ASME Y14.5M-1994
4. MAX. ALL MACH. SURFACES
5. DRAWING UNITS: MM

USED ON: ME-484686

MATERIAL: SEE PARTS LIST

FERMI NATIONAL ACCELERATOR LABORATORY
UNITED STATES DEPARTMENT OF ENERGY

ASTA - CAPTURE CAVITY 1 COLDMASS-CC1 ASSEMBLY CC1 5K PIPE ASSY

SCALE	DRAWING NUMBER	SHEET	REV
1:2 & NOTED	3886.801-ME-484697	1 OF 1	

CREATED WITH : Ideas12NXSeries GROUP: TD/DDCIS-DESIGN-COMPUTING

Preliminary

REV	DESCRIPTION	DRAWN	DATE
		APPROVED	DATE
–	ER #10504 NEW RELEASE		

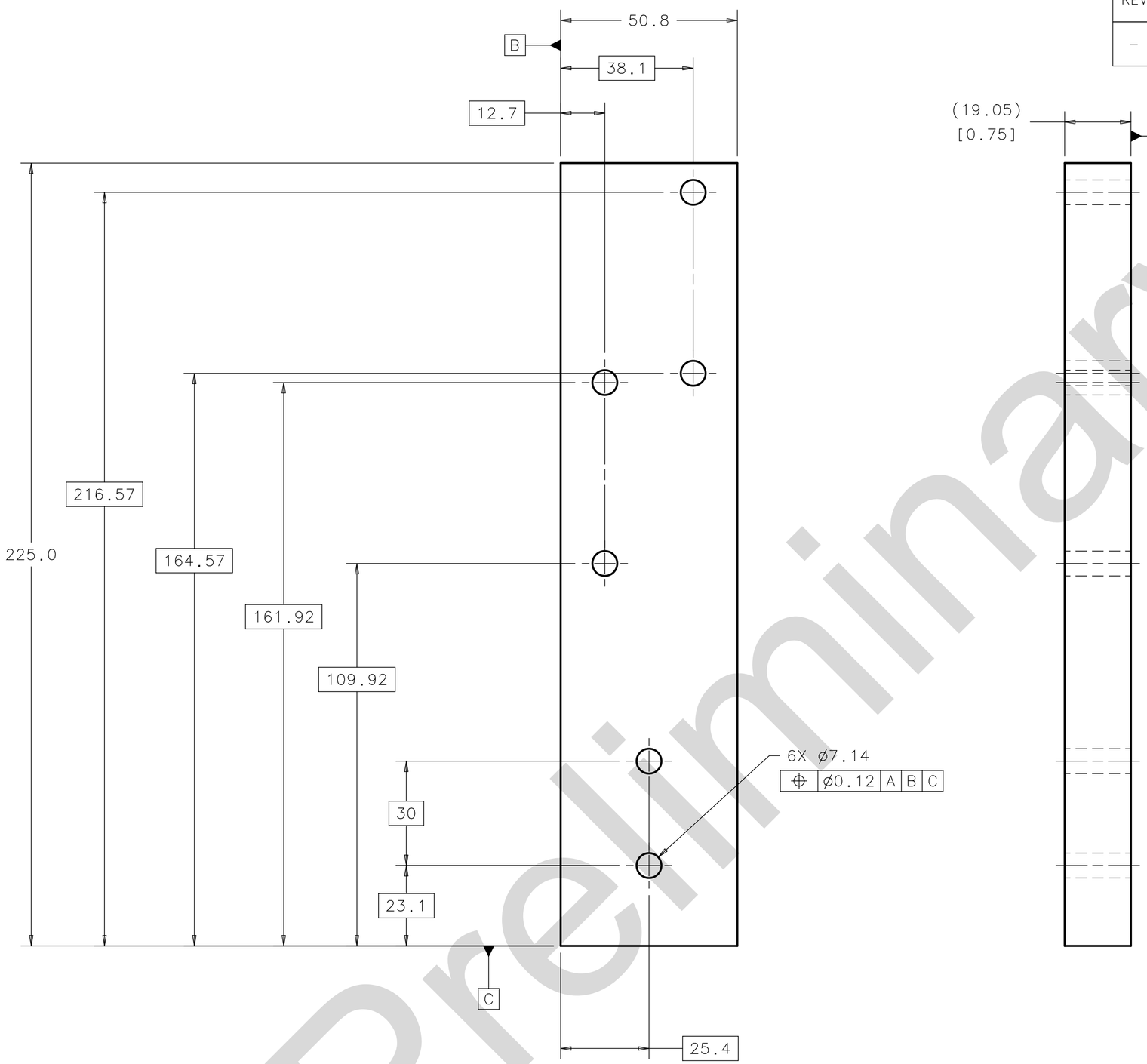

Preliminary

NOTES (UNLESS OTHERWISE SPECIFIED):

1. PART MUST BE FREE OF DIRT, GREASE, OIL AND CHIPS.
2. PART TO BE FREE OF ALL SHARP EDGES, CORNERS, AND BURRS.
3. ALL DIMENSIONS ARE IN MILLIMETERS;
   DIMENSIONS IN [.XX] ARE IN INCHES.

UNLESS OTHERWISE SPECIFIED			ORIGINATOR	Y.ORLOV	22-AUG-2012
0.X	0.XX	ANGLE	DRAWN	F.MCCONOLOGUE	22-AUG-2012
± 0.5	± 0.12	±0.5°	CHECKED		
			APPROVED		

1. BREAK ALL SHARP EDGES 0.5 MAX.
2. DO NOT SCALE DRAWING.
3. DIMENSIONS BASED UPON ASME Y14.5M-1994
4. MAX. ALL MACH. SURFACES N10
5. DRAWING UNITS: MM

USED ON: ME-484686

MATERIAL: G10 3/4" THICK STOCK PLATE

FERMI NATIONAL ACCELERATOR LABORATORY
UNITED STATES DEPARTMENT OF ENERGY

ASTA – CAPTURE CAVITY 1 COLDMASS – CC1 ASSEMBLY SUPPORT 5K-WARMUP PIPING

SCALE	DRAWING NUMBER	SHEET	REV
1:1	3886.801-MC-484698	1 OF 1	

CREATED WITH : Ideas12NXSeries GROUP: TD/DDCIS-DESIGN-COMPUTING

REV	DESCRIPTION	DRAWN	DATE
		APPROVED	DATE
	ER# 10504 NEW RELEASE		

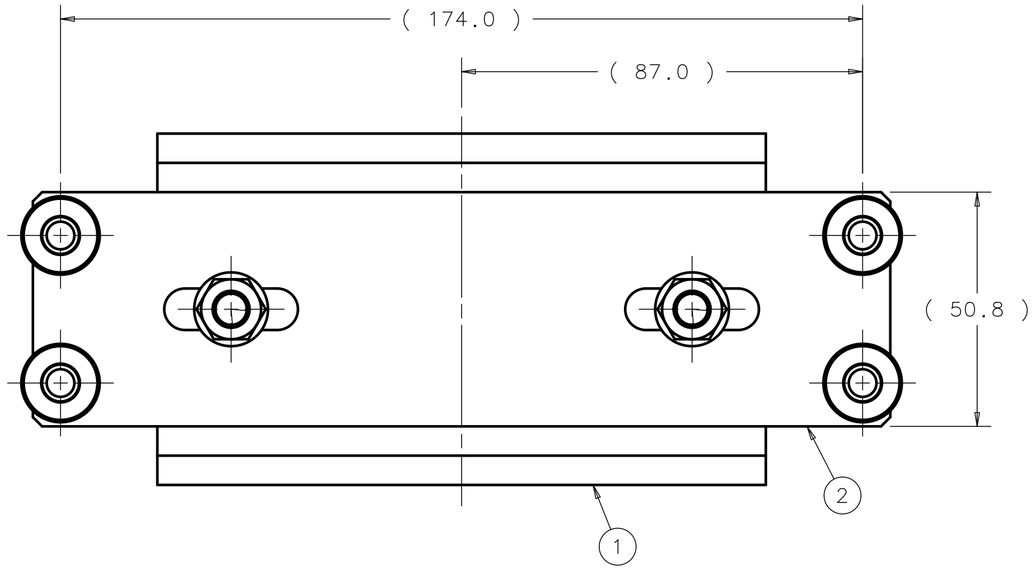

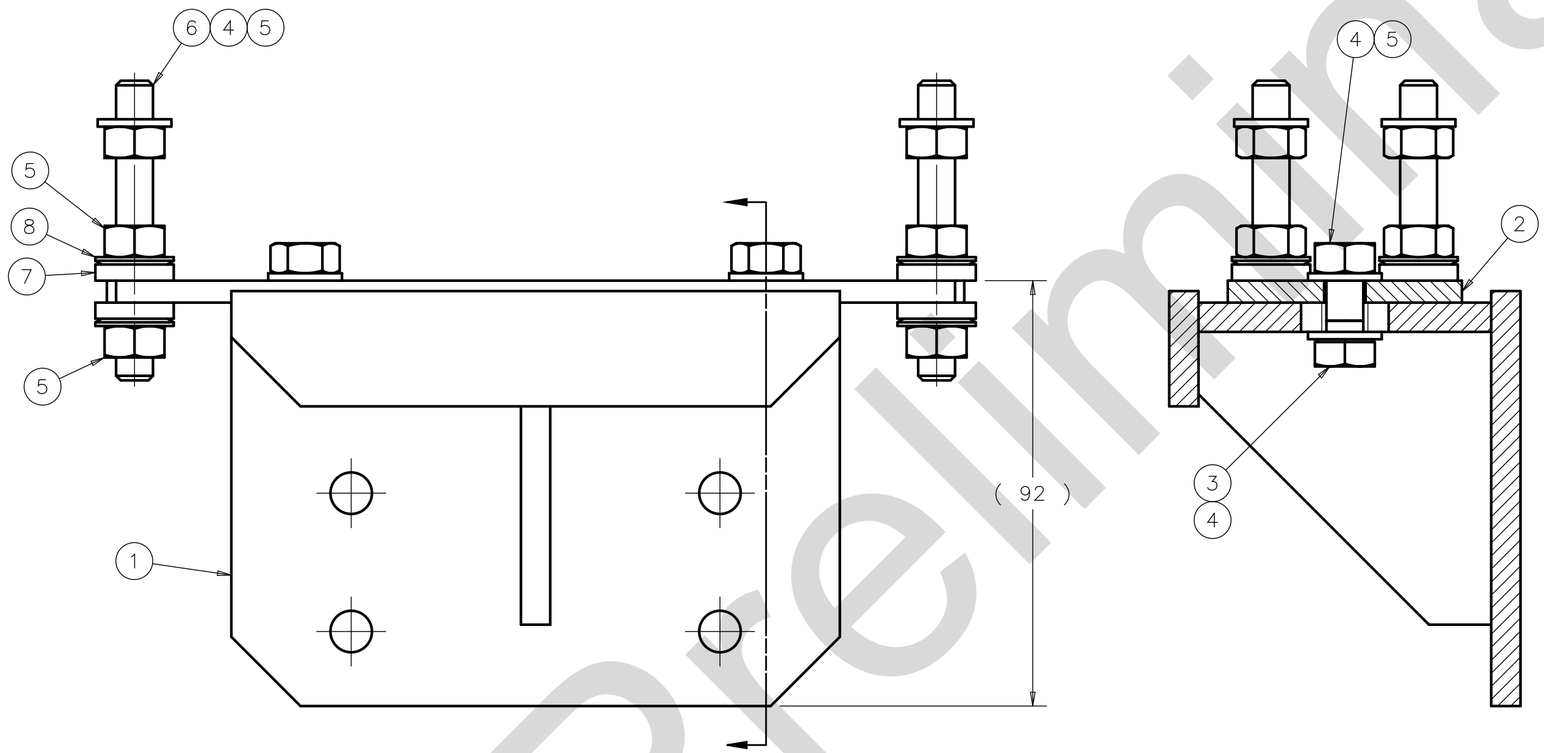

ITEM	PART NO.	DESCRIPTION OR SIZE	QTY.
8	COM'L	CONICAL WASHER M8 MCMASTER# 94007A112 OR EQUIV	8
7	COM'L	CONICAL SOCKET MCMASTER# 94007A212 OR EQUIV	8
6	COM'L	THREADED ROD, M8 X 65 LG,316L S.S	4
5	COM'L	HEX NUT, M8, SILC. BRONZE	14
4	COM'L	WASHER, M8 MCMASTER# 90965A190 OR EQUIV	10
3	COM'L	HEX SCREW, ISO 4017, M8 X 20 LG. MCMASTER# 93810A467 OR EQUIV	2
2	D*880255	CONNECTION PLATE	1
1	MC-	VAT SUPPORT BRACKET WLDT	1

PARTS LIST

UNLESS OTHERWISE SPECIFIED			ORIGINATOR	Y.ORLOV	29-AUG-2012
0.X	0.XX	ANGLES	DRAWN	F.MCCONOLOGUE	29-AUG-2012
± 0.5	± --	± --	CHECKED		
			APPROVED		

1. BREAK ALL SHARP EDGES -- MAX.
2. DO NOT SCALE DRAWING.
3. DIMENSIONS BASED UPON ASME Y14.5M-1994
4. MAX. ALL MACH. SURFACES 3.2
5. DRAWING UNITS: MM

USED ON: ME-484686

MATERIAL: SEE PARTS LIST

FERMI NATIONAL ACCELERATOR LABORATORY
UNITED STATES DEPARTMENT OF ENERGY

ASTA - CAPTURE CAVITY 1 COLDMASS - CC1 ASSEMBLY CC1 VAT SUPPORT CAVITY KIT

SCALE	DRAWING NUMBER	SHEET	REV
1:1	3886.801-MC-484699	1 OF 1	

CREATED WITH : Ideas12NXSeries GROUP: TD/DDCIS-DESIGN-COMPUTING

NOTES (UNLESS OTHERWISE SPECIFIED):

1. ASSEMBLY MUST BE FREE OF DIRT, GREASE, OIL AND CHIPS.
2. KIT SHOWN, MUST BE DISASSEMBLED PRIOR TO INSTALLATION IN PARENT ASSEMBLY.

Preliminary

REV	DESCRIPTION	DRAWN	DATE
		APPROVED	DATE
–	ER #10504 NEW RELEASE		

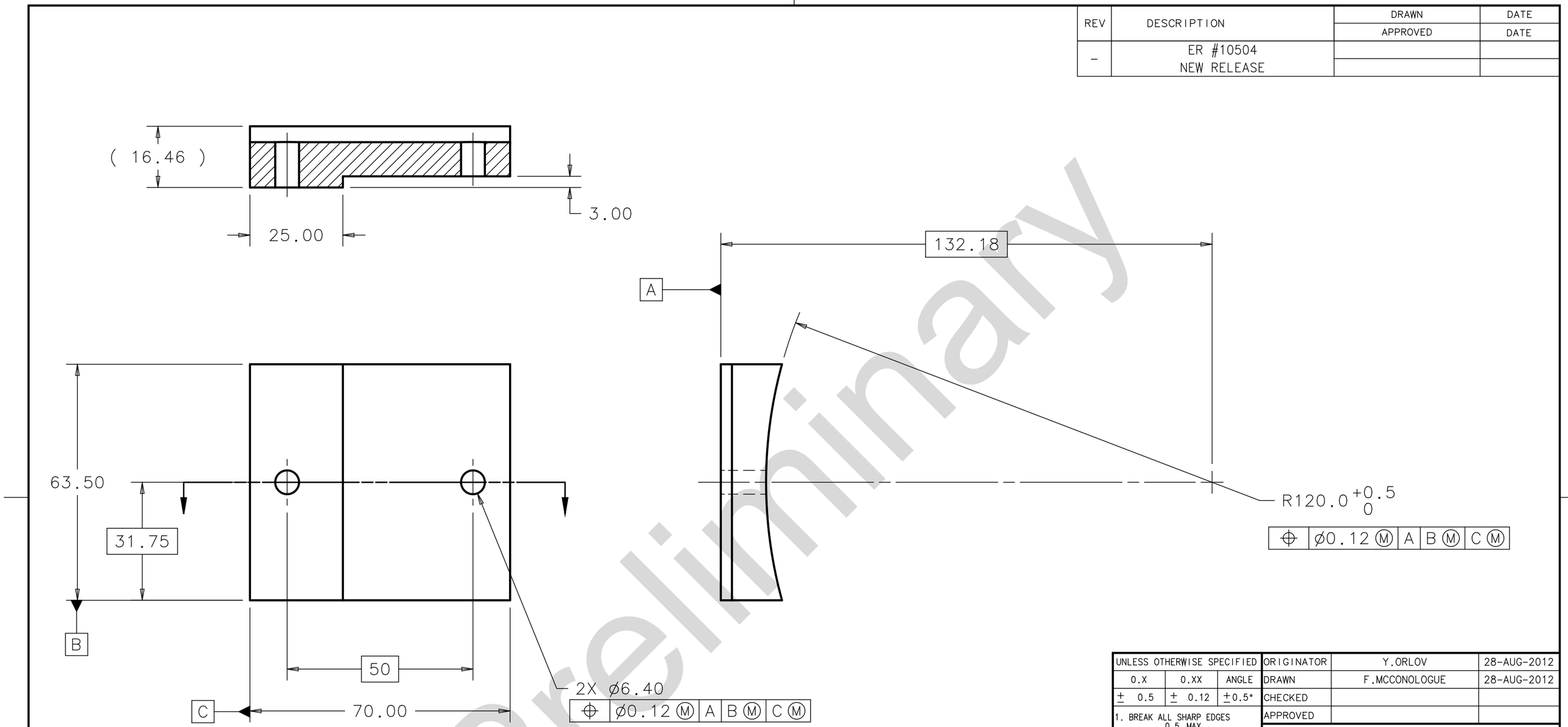

Preliminary

UNLESS OTHERWISE SPECIFIED			ORIGINATOR	Y.ORLOV	28-AUG-2012
0.X	0.XX	ANGLE	DRAWN	F.MCCONOLOGUE	28-AUG-2012
± 0.5	± 0.12	±0.5°	CHECKED		
			APPROVED		

1. BREAK ALL SHARP EDGES 0.5 MAX.
2. DO NOT SCALE DRAWING.
3. DIMENSIONS BASED UPON ASME Y14.5M-1994
4. MAX. ALL MACH. SURFACES N8
5. DRAWING UNITS: MM

USED ON: ME-484686

MATERIAL:

FERMI NATIONAL ACCELERATOR LABORATORY
UNITED STATES DEPARTMENT OF ENERGY

ASTA – CAPTURE CAVITY 1 COLDMASS-CC1 ASSEMBLY SPACER TI

SCALE	DRAWING NUMBER	SHEET	REV
1:1	3886.801-MB-484700	1 OF 1	

CREATED WITH : Ideas12NXSeries | GROUP: TD/DDCIS-DESIGN-COMPUTING

NOTES (UNLESS OTHERWISE SPECIFIED):

1. PART MUST BE FREE OF DIRT, GREASE, OIL AND CHIPS.
2. PART TO BE FREE OF ALL SHARP EDGES, CORNERS, AND BURRS.

Created: 11:17:05 on 04-09-12 (D-M-Y) By: mccono State: 1-INITIAL

REV	DESCRIPTION	DRAWN	DATE
		APPROVED	DATE
	ER# 10504 NEW RELEASE		

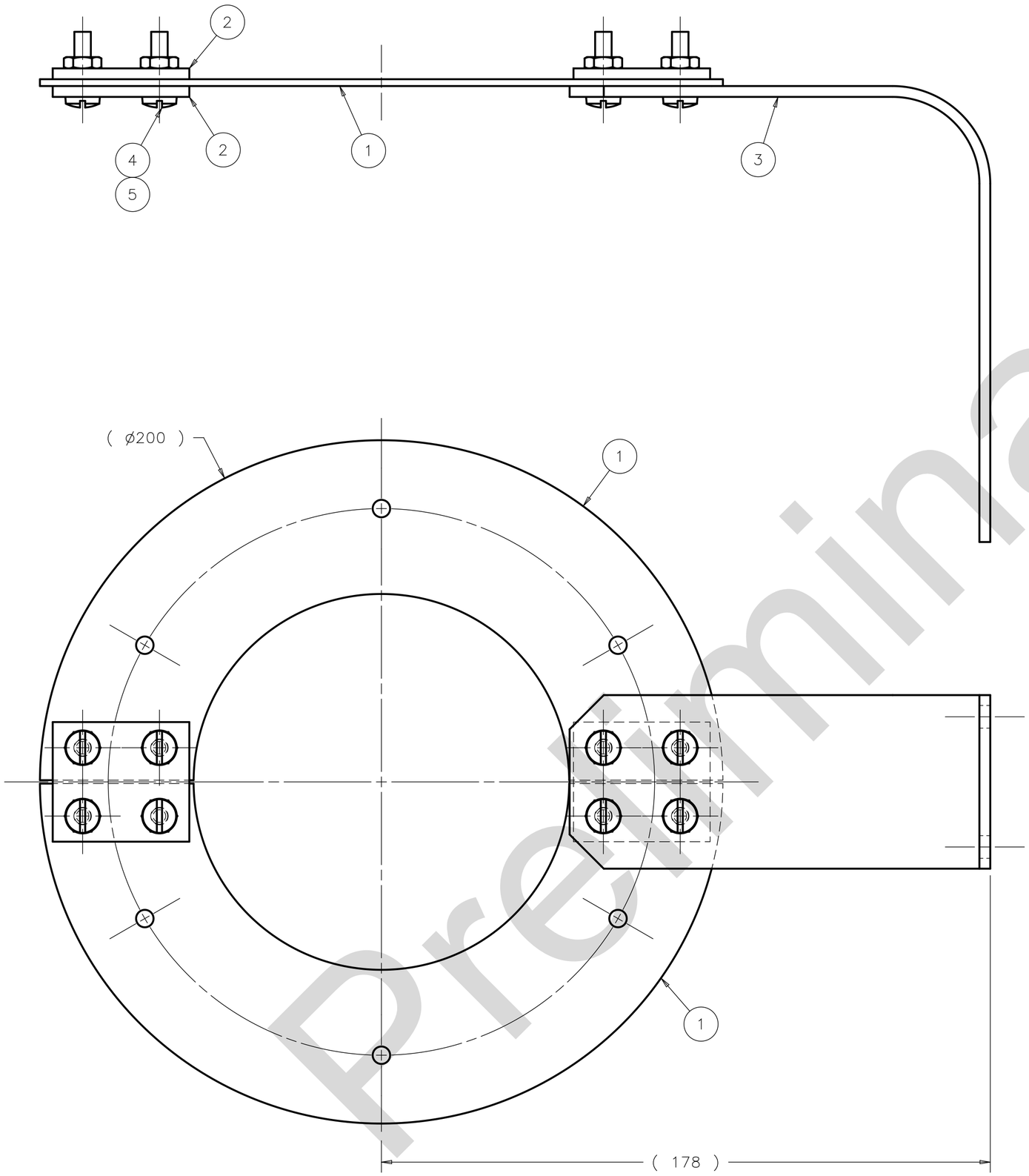

Preliminary

NOTES (UNLESS OTHERWISE SPECIFIED):

1. ASSEMBLY MUST BE FREE OF DIRT, GREASE, OIL AND CHIPS.
2. KIT SHOWN, MUST BE DISASSEMBLED PRIOR TO INSTALLATION IN PARENT ASSEMBLY.

ITEM	PART NO.	DESCRIPTION OR SIZE	QTY.
5	COM'L	NUT HEX, #10-24, C.S1020	8
4	COM'L	PHSCR, #10-24 X 3/4"LG, S.S.18-8	8
3	MB-	COPPER BAR 5K	1
2	MB-	PLATE 5K SHIELD	3
1	MB	ENDCAP 5K SHIELD	2

PARTS LIST

UNLESS OTHERWISE SPECIFIED			ORIGINATOR	Y.ORLOV	21-AUG-2012
.X	.XX	ANGLES	DRAWN	F.MCCONOLOGUE	21-AUG-2012
± --	± --	± --	CHECKED		
			APPROVED		

1. BREAK ALL SHARP EDGES -- MAX.
2. DO NOT SCALE DRAWING.
3. DIMENSIONS BASED UPON ASME Y14.5M-1994
4. MAX. ALL MACH. SURFACES -- √
5. DRAWING UNITS: MM

USED ON: ME-484686

MATERIAL: SEE PARTS LIST

FERMI NATIONAL ACCELERATOR LABORATORY
UNITED STATES DEPARTMENT OF ENERGY

ASTA - CAPTURE CAVITY 1 COLDMASS - CC1 ASSEMBLY ENDCAP 5K SHIELD KIT

SCALE	DRAWING NUMBER	SHEET	REV
1:1	3886.801-MC-484701	1 OF 1	

CREATED WITH : Ideas12NXSeries | GROUP: TD/DDCIS-DESIGN-COMPUTING

REV	DESCRIPTION	DRAWN	DATE
		APPROVED	DATE
–	ER #10504 NEW RELEASE		

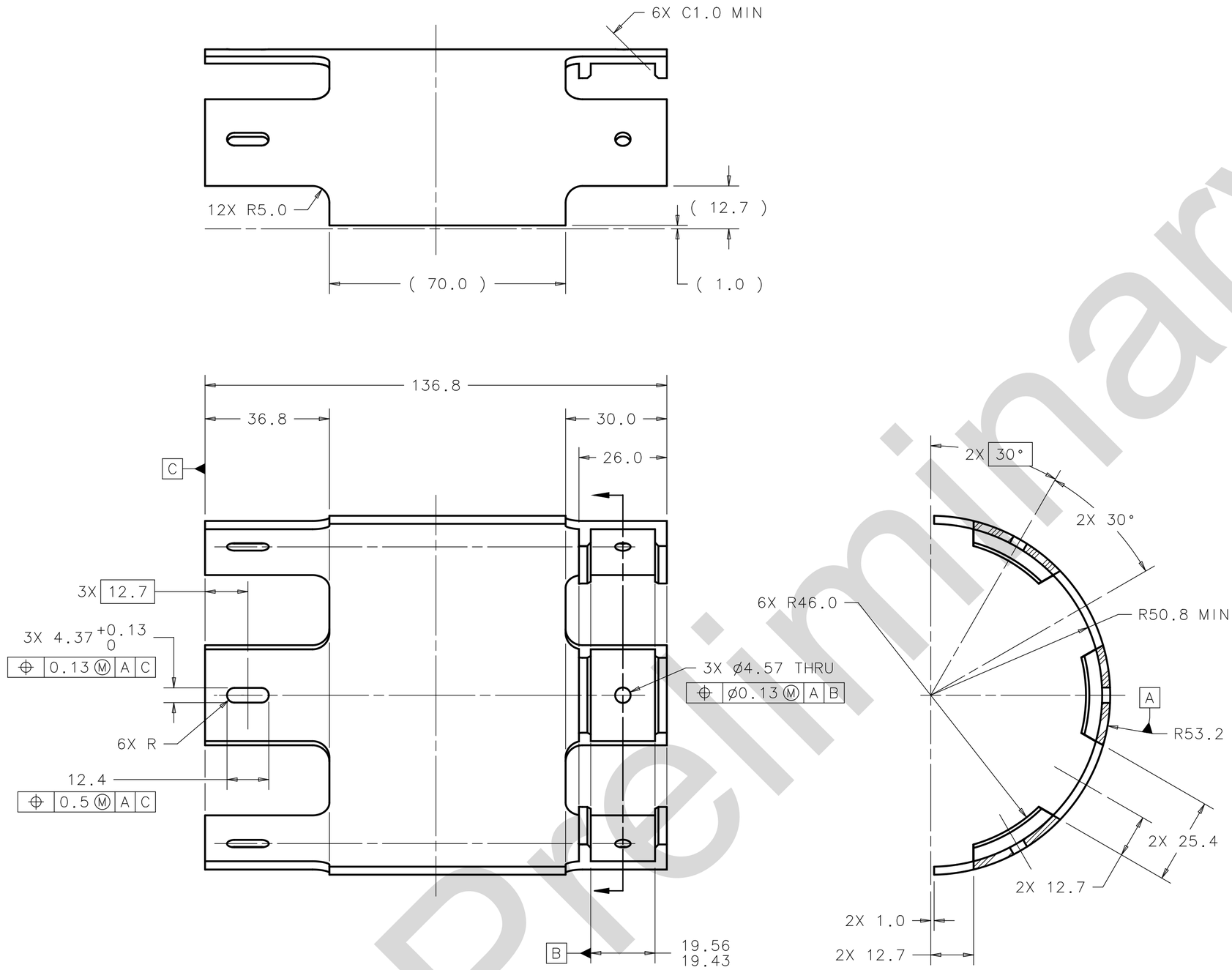

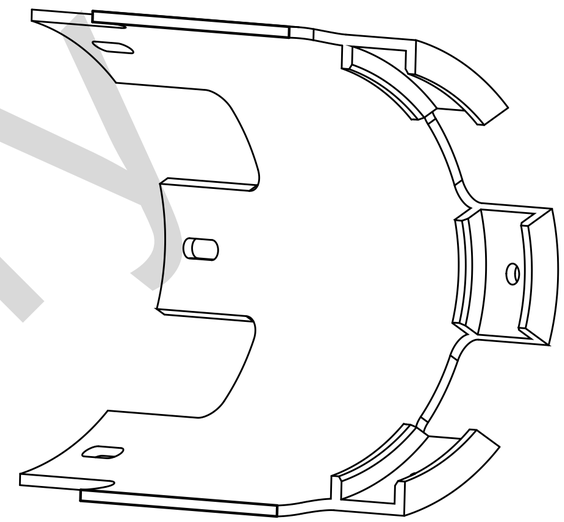

Preliminary

NOTES (UNLESS OTHERWISE SPECIFIED):

1. PART TO BE FREE OF DIRT, GREASE, OIL, AND CHIPS.
2. TRAILING ZEROS ON DIMENSIONS DENOTE TOLERANCE.

UNLESS OTHERWISE SPECIFIED			ORIGINATOR	Y.ORLOV	21-AUG-2012
0.X	0.XX	ANGLE	DRAWN	F.MCCONOLOGUE	28-AUG-2012
± 0.5	± 0.13	± 1°	CHECKED		
1. BREAK ALL SHARP EDGES 0.5 MAX. 2. DO NOT SCALE DRAWING. 3. DIMENSIONS BASED UPON ASME Y14.5M-1994 4. MAX. ALL MACH. SURFACES -- 5. DRAWING UNITS: MM			APPROVED		
			USED ON	ME-484686	
			MATERIAL	G-10	

FERMI NATIONAL ACCELERATOR LABORATORY
UNITED STATES DEPARTMENT OF ENERGY

ASTA – CAPTURE CAVITY 1 COLDMASS – CC1 ASSEMBLY COMPENSATOR VIBRATION HALF

SCALE	DRAWING NUMBER	SHEET	REV
1:2	3886.801-MC-484702	1 OF 1	

CREATED WITH : Ideas12NXSeries GROUP: TD/DDCIS-DESIGN-COMPUTING

Created: 11:17:41 on 04-09-12 (D-M-Y) By: mccono State: 1-INITIAL

REV	DESCRIPTION	DRAWN	DATE
		APPROVED	DATE
	ER# 10504 NEW RELEASE		

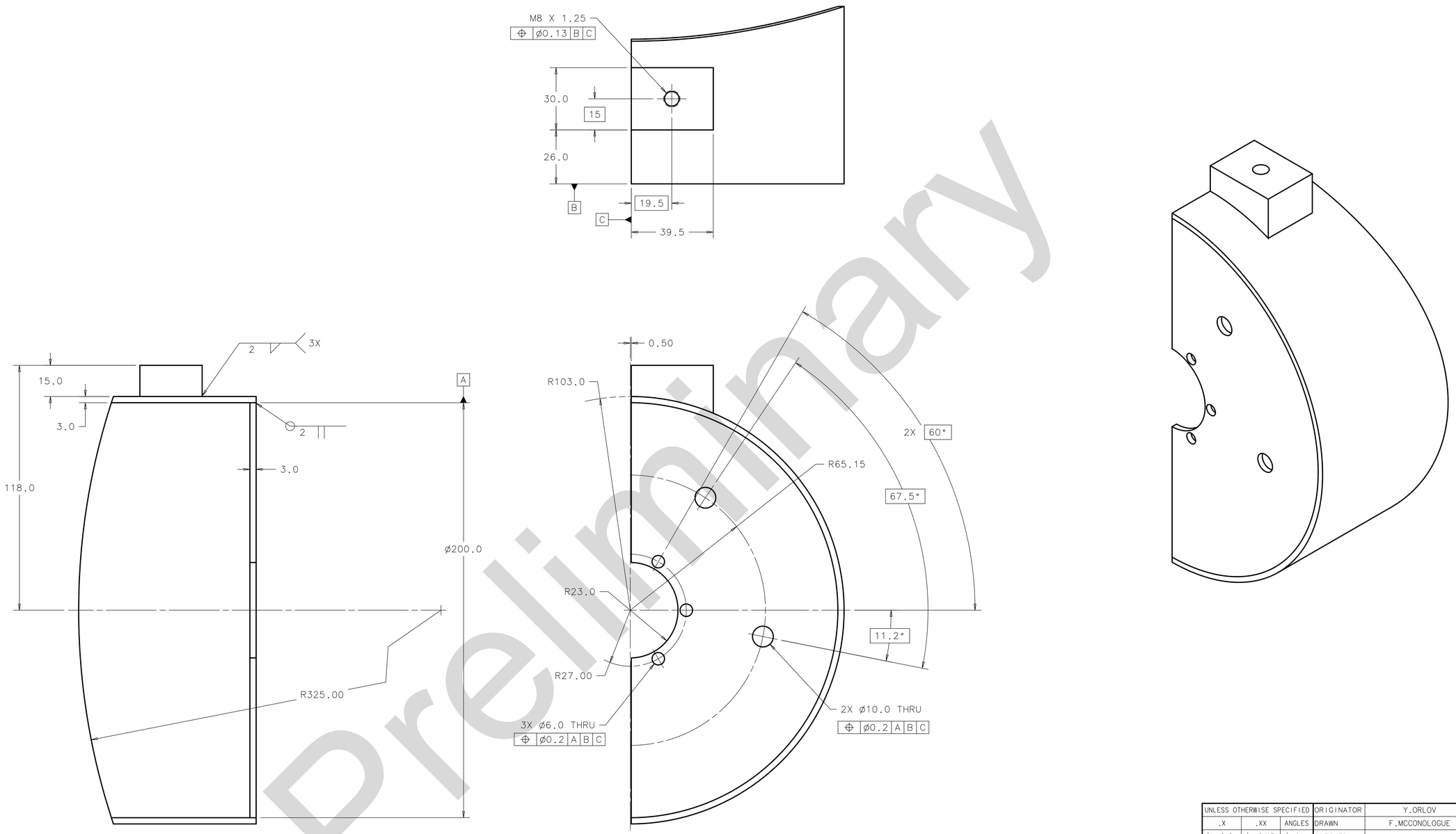

Preliminary

NOTES (UNLESS OTHERWISE SPECIFIED):

1. PERFORM FINAL MACHINING AFTER WELDING.
   STRESS RELIEVE AFTER WELDING AND BEFORE MACHINING.
   FINAL MACHINING AFTER WELDING IF REQUIRED.
   MACHINING MAY BE PERFORMED PRIOR TO WELDING.

2. WELDMENT MUST BE FREE OF DIRT, GREASE, OIL AND CHIPS.

UNLESS OTHERWISE SPECIFIED			ORIGINATOR	Y.ORLOV	22-AUG-2012
.X	.XX	ANGLES	DRAWN	F.MCCONOLOGUE	22-AUG-2012
± 0.8	± 0.13	± 1°	CHECKED		
1. BREAK ALL SHARP EDGES .75 MAX. 2. DO NOT SCALE DRAWING. 3. DIMENSIONS BASED UPON ASME Y14.5M-1994 4. MAX. ALL MACH. SURFACES 3.2 5. DRAWING UNITS: MM			APPROVED		
			USED ON	ME-484686	
			MATERIAL	ALUMINUM 6061-T6	

FERMI NATIONAL ACCELERATOR LABORATORY
UNITED STATES DEPARTMENT OF ENERGY

ASTA - CAPTURE CAVITY 1 COLDMASS - CC1 ASSEMBLY 80K HEAT-SHIELD MC-A

SCALE	DRAWING NUMBER	SHEET	REV
1:1	3886.801-MD-484703	1 OF 1	

CREATED WITH : Ideas12NXSeries GROUP: TD/DDCIS-DESIGN-COMPUTING

REV	DESCRIPTION	DRAWN	DATE
		APPROVED	DATE
	ER# 10504 NEW RELEASE		

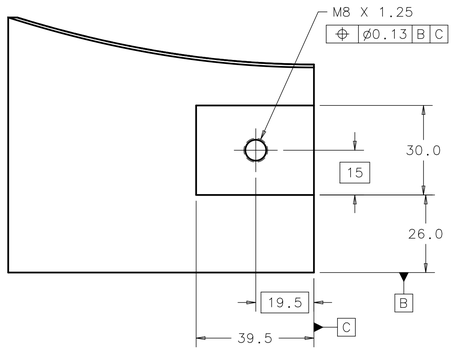

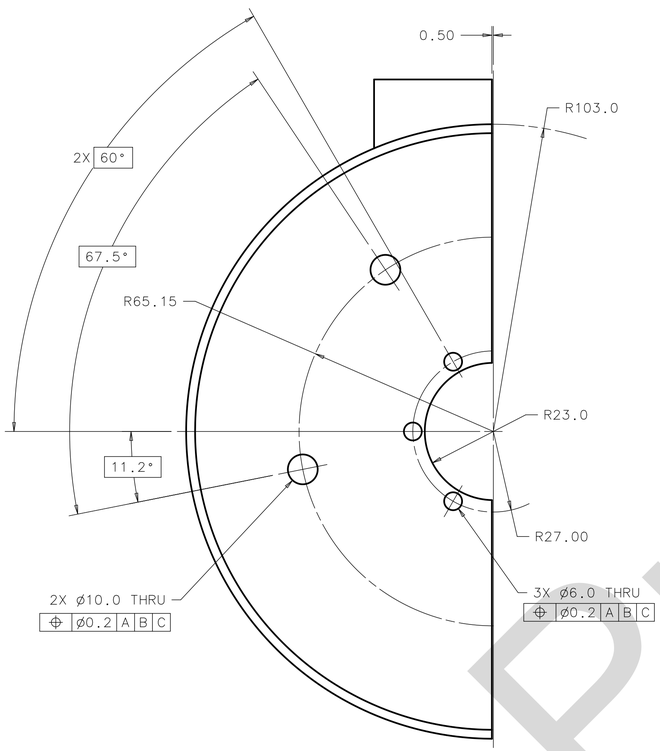

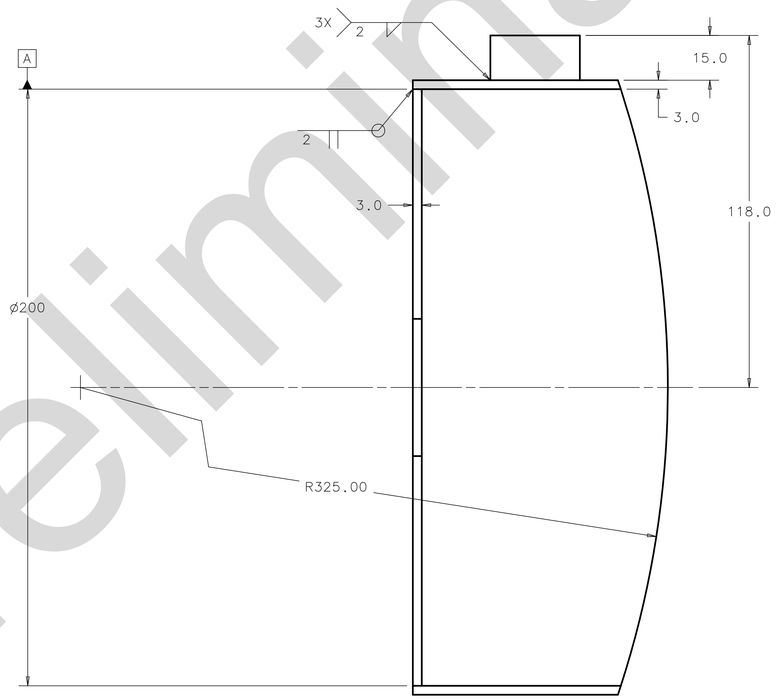

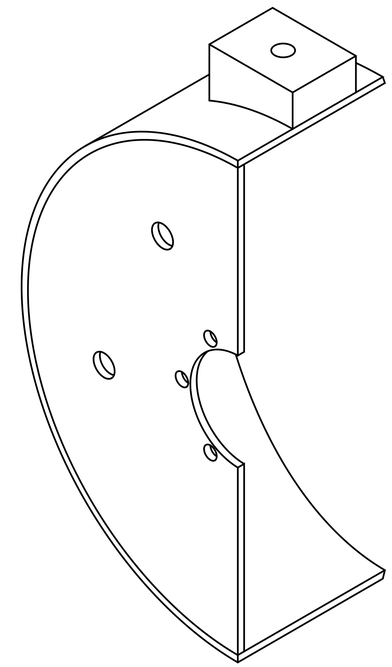

Preliminary

NOTES (UNLESS OTHERWISE SPECIFIED):

1. PERFORM FINAL MACHINING AFTER WELDING.
   STRESS RELIEVE AFTER WELDING AND BEFORE MACHINING.
   FINAL MACHINING AFTER WELDING IF REQUIRED.
   MACHINING MAY BE PERFORMED PRIOR TO WELDING.

2. WELDMENT MUST BE FREE OF DIRT, GREASE, OIL AND CHIPS.

UNLESS OTHERWISE SPECIFIED			ORIGINATOR	Y.ORLOV	22-AUG-2012
.X	.XX	ANGLES	DRAWN	F.MCCONOLOGUE	22-AUG-2012
± 0.8	± 0.13	± 1°	CHECKED		
			APPROVED		

1. BREAK ALL SHARP EDGES .75 MAX.
2. DO NOT SCALE DRAWING.
3. DIMENSIONS BASED UPON ASME Y14.5M-1994
4. MAX. ALL MACH. SURFACES 3.2
5. DRAWING UNITS: MM

USED ON: ME-484686

MATERIAL: ALUMINUM 6061-T6

FERMI NATIONAL ACCELERATOR LABORATORY
UNITED STATES DEPARTMENT OF ENERGY

ASTA - CAPTURE CAVITY 1
COLDMASS - CC1 ASSEMBLY
80K HEAT-SHIELD MC-B

SCALE	DRAWING NUMBER	SHEET	REV
1:1	3886.801-MD-484704	1 OF 1	

CREATED WITH : Ideas12NXSeries | GROUP: TD/DDCIS-DESIGN-COMPUTING

REV	DESCRIPTION	DRAWN	DATE
		APPROVED	DATE
-	ER #10504 NEW RELEASE		

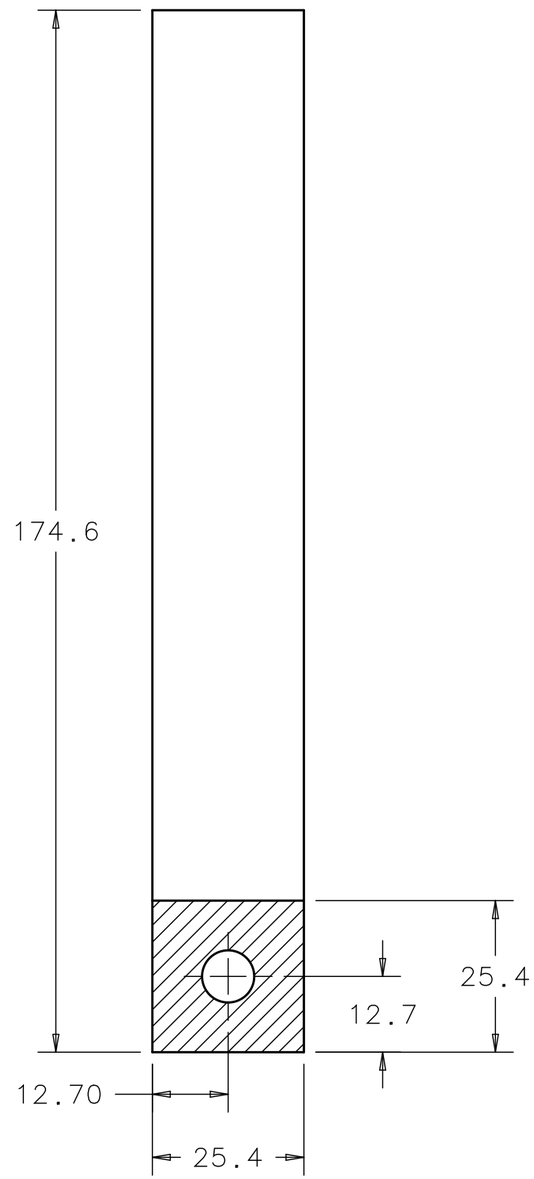

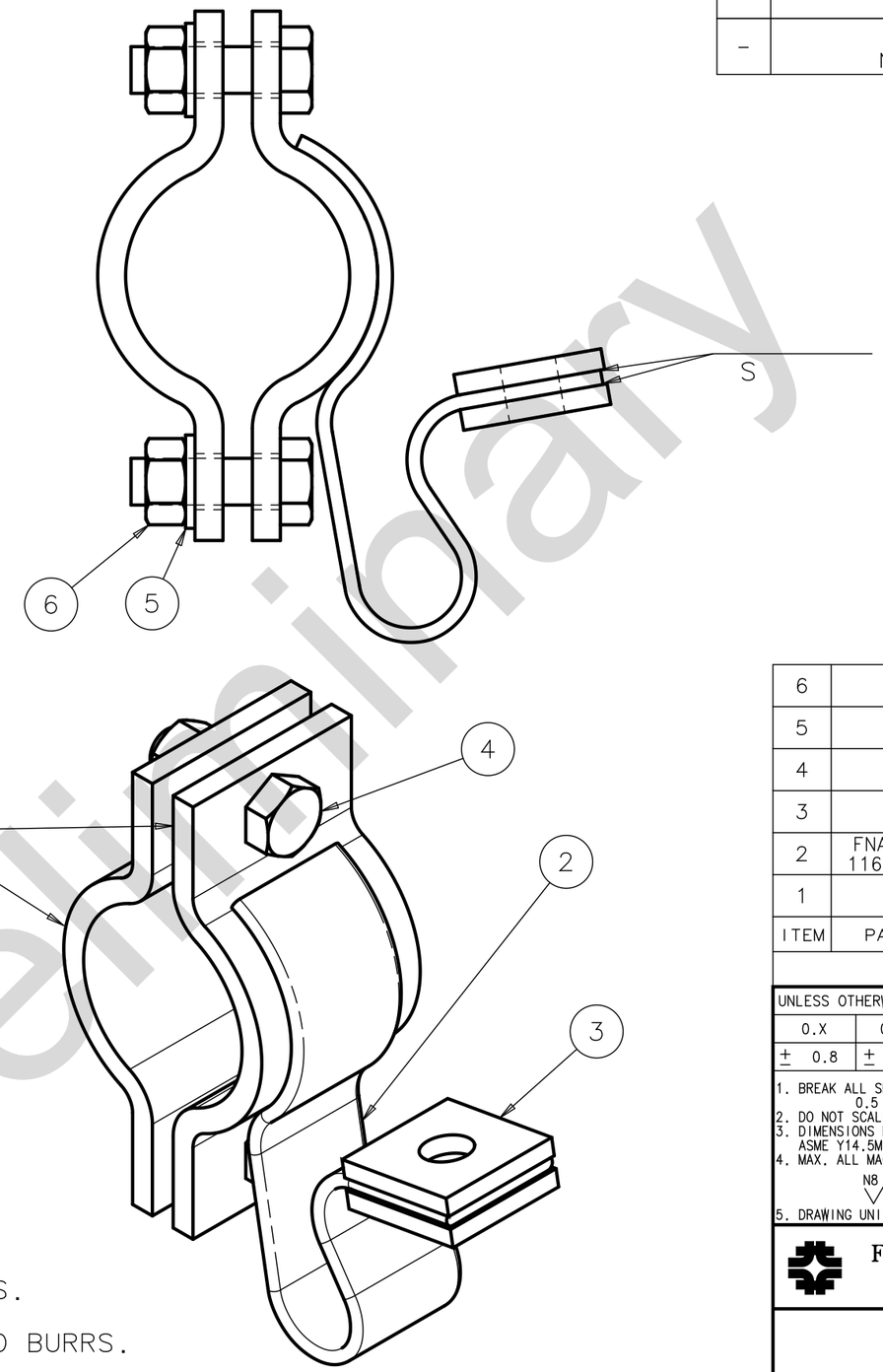

Preliminary

ITEM	PART NO.	DESCRIPTION OR SIZE	QTY.
6	COML	NUT HEX 5/16-18 SS316L	2
5	COML	WASHER FLAT 5/16	2
4	COML	HHCS 5/16-18 X 1.0 SS316L	2
3	MB-	WASHER SQUARE 5/16	2
2	FNAL STOCK 1168-012500	BRAID, FLAT TINNED COPPER WOVEN	
1	MB-	CLAMP HEAT-SINK 1.5"ID	2

PARTS LIST

UNLESS OTHERWISE SPECIFIED			ORIGINATOR	Y.ORLOV	29-AUG-2012
0.X	0.XX	ANGLES	DRAWN	J.KURNAT	29-AUG-2012
± 0.8	± 0.13	± 1°	CHECKED		
			APPROVED		

1. BREAK ALL SHARP EDGES 0.5 MAX.
2. DO NOT SCALE DRAWING.
3. DIMENSIONS BASED UPON ASME Y14.5M-1994
4. MAX. ALL MACH. SURFACES N8
5. DRAWING UNITS: METRIC

USED ON: ME-484686

MATERIAL: SEE PARTS LIST

FERMI NATIONAL ACCELERATOR LABORATORY
UNITED STATES DEPARTMENT OF ENERGY

ASTA - CAPTURE CAVITY 1 COLDMASS-CC1 ASSEMBLY BRAID 5K TO FRAME KIT

SCALE	DRAWING NUMBER	SHEET	REV
1:2	3886.801-MB-484705	1 OF 1	

CREATED WITH : Ideas12NXSeries | GROUP: TD/DDCIS-DESIGN-COMPUTING

NOTES (UNLESS OTHERWISE SPECIFIED):

1. PART MUST BE FREE OF DIRT, GREASE, OIL AND CHIPS.
2. PART TO BE FREE OF ALL SHARP EDGES, CORNERS, AND BURRS.
3. CROSSHATCH SHOWS AREA TO BE TINNED PRIOR TO HOLE PUNCH BOTH SIDES.
4. KIT SHOWN MUST BE DISASSEMBLED PRIOR TO INSTALLATION ON PARENT ASSEMBLY.

REV	DESCRIPTION	DRAWN	DATE
		APPROVED	DATE
–	ER #10504 NEW RELEASE		

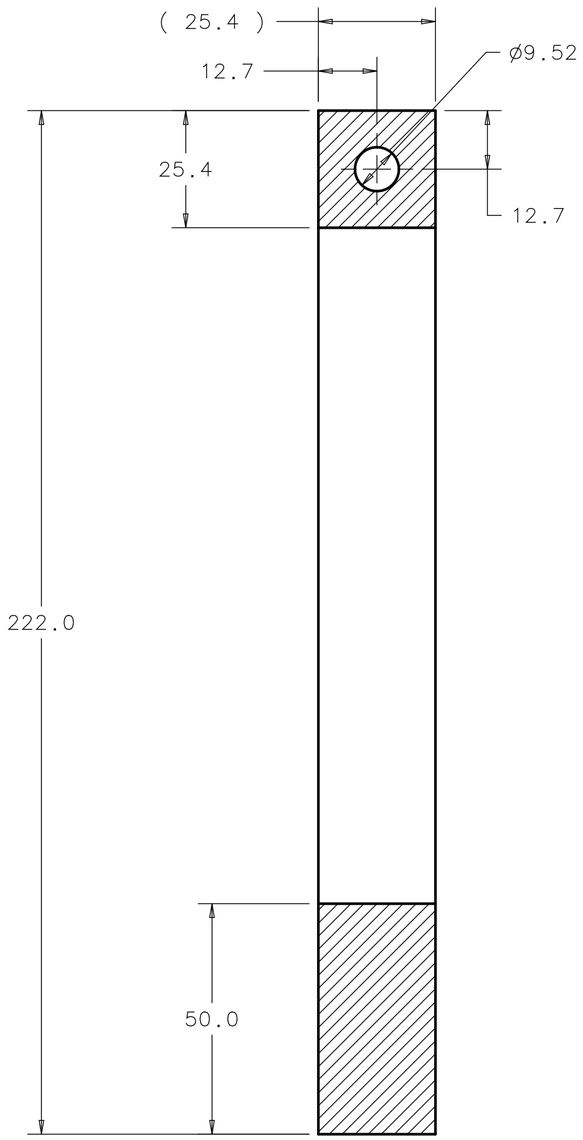

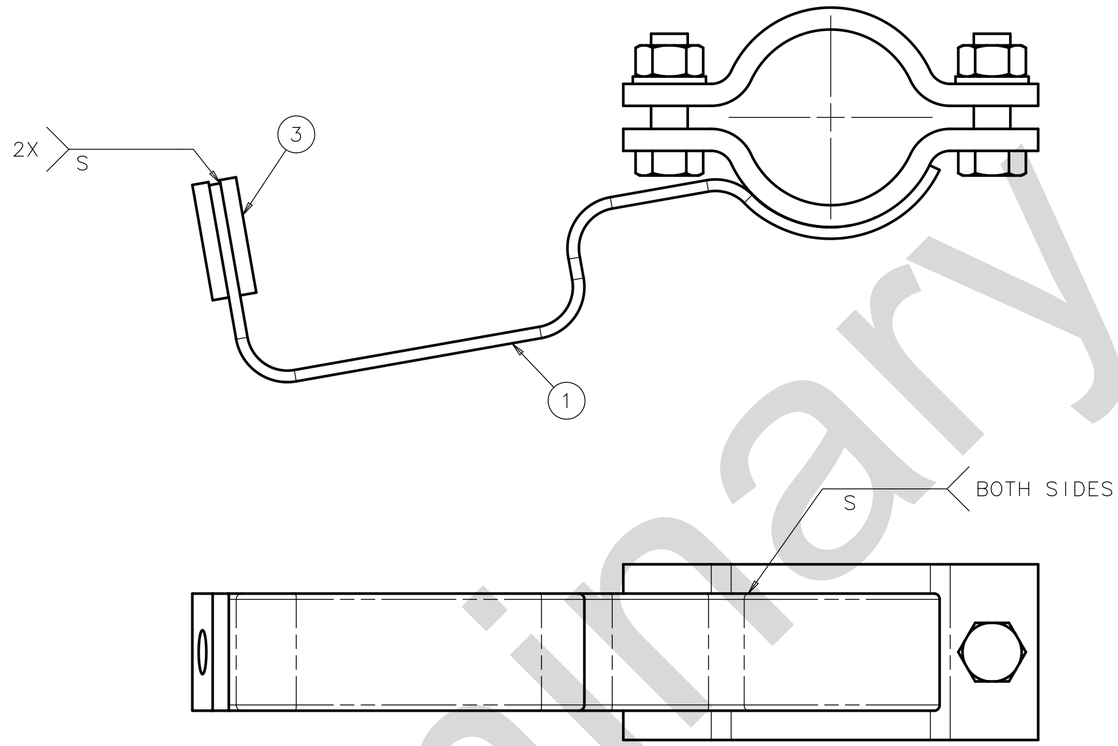

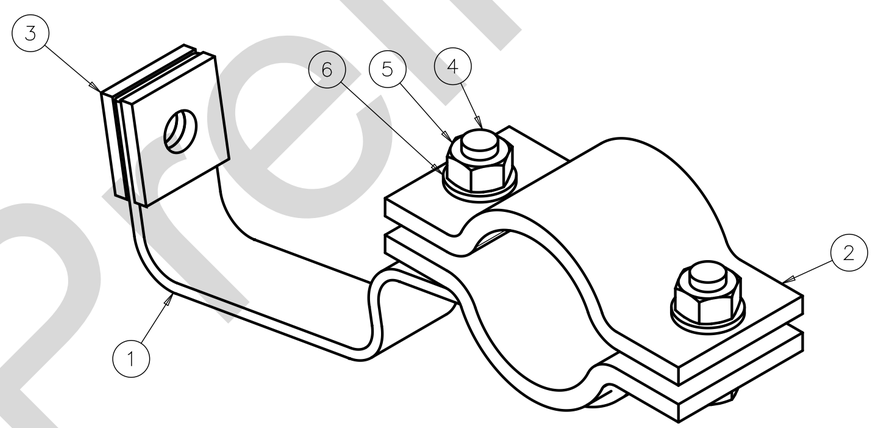

ITEM	PART NO.	DESCRIPTION OR SIZE	QTY.
5	COML	WSHR-FLAT 5/16" 316SS	2
4	COML	SCR-HHC 5/16-18 1"LG 316SS	2
3		WASHER SQUARE	2
2		CLAMP HEAT-SINK 1/2" ID	2
1	FNAL STOCK 1168-012500	BRAID,FLAT TINNED COPPER WOVEN	–

PARTS LIST

UNLESS OTHERWISE SPECIFIED			ORIGINATOR	Y.ORLOV	29-AUG-2012
0.X	0.XX	ANGLE	DRAWN	F.MCCONOLOGUE	29-AUG-2012
± 0.8	± 0.13	± 1°	CHECKED		
			APPROVED		

1. BREAK ALL SHARP EDGES 0.5 MAX.
2. DO NOT SCALE DRAWING.
3. DIMENSIONS BASED UPON ASME Y14.5M-1994
4. MAX. ALL MACH. SURFACES N8
5. DRAWING UNITS: MM

USED ON: ME-484686

MATERIAL: SEE PARTS LIST

FERMI NATIONAL ACCELERATOR LABORATORY
UNITED STATES DEPARTMENT OF ENERGY

ASTA – CAPTURE CAVITY 1 COLDMASS-CC1 ASSEMBLY BRAID-5K TO MC KIT

SCALE	DRAWING NUMBER	SHEET	REV
1:1	3886.801-MC-484706	1 OF 1	

CREATED WITH : Ideas12NXSeries | GROUP: TD/DDCIS-DESIGN-COMPUTING

NOTES (UNLESS OTHERWISE SPECIFIED):

1. PART MUST BE FREE OF DIRT, GREASE, OIL AND CHIPS.
2. PART TO BE FREE OF ALL SHARP EDGES, CORNERS, AND BURRS.
3. CROSSHATCH SHOWS AREA TO BE TINNED PRIOR TO HOLE PUNCH BOTH SIDES.
4. KIT SHOWN, MUST BE DISASSEMBLED PRIOR TO INSTALLATION IN PARENT ASSEMBLY.

Preliminary

REV	DESCRIPTION	DRAWN	DATE
		APPROVED	DATE
–	ER #10504 NEW RELEASE		

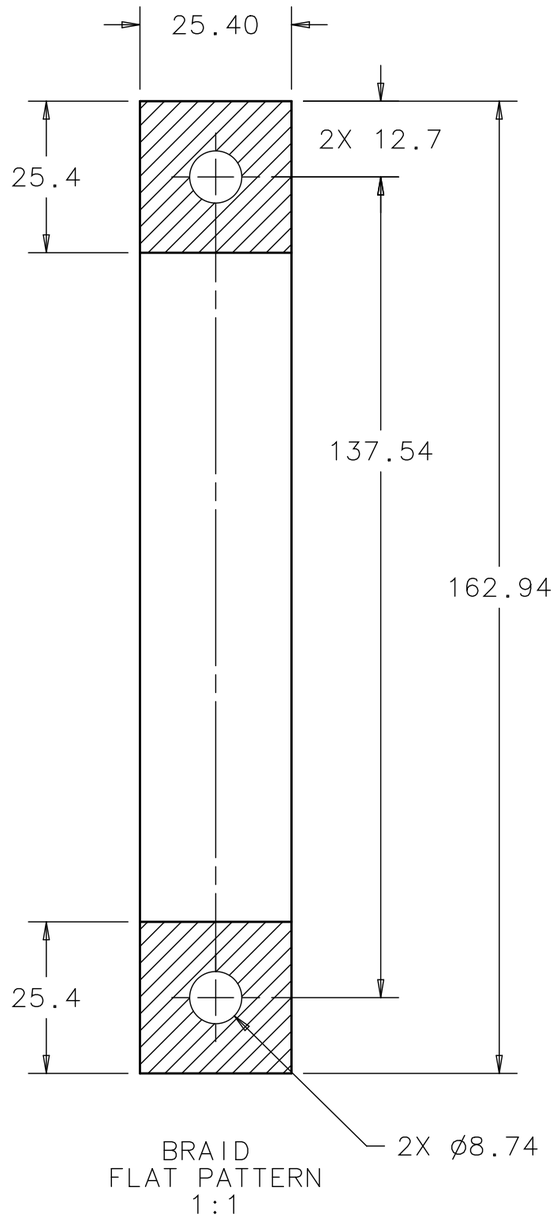

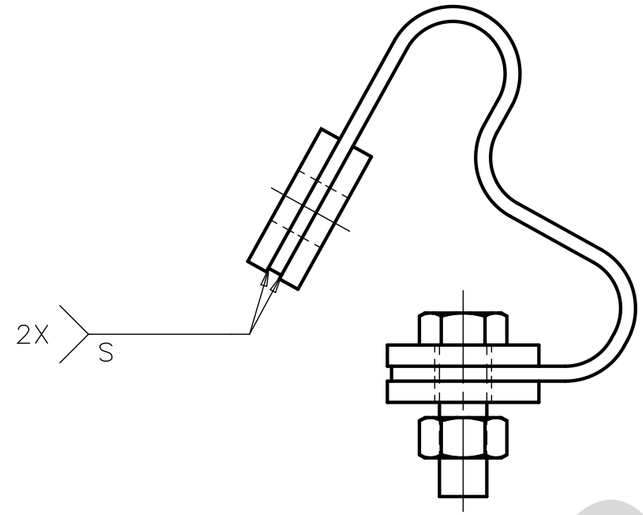

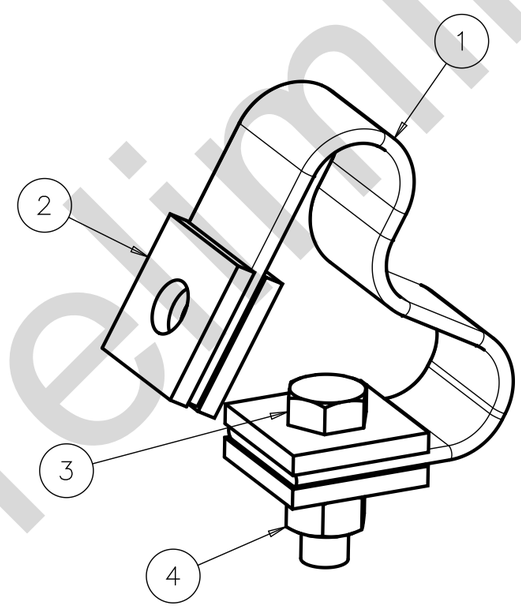

Preliminary

NOTES (UNLESS OTHERWISE SPECIFIED):

1. PART MUST BE FREE OF DIRT, GREASE, OIL AND CHIPS.
2. PART TO BE FREE OF ALL SHARP EDGES, CORNERS, AND BURRS.
3. CROSSHATCH SHOWS AREA TO BE TINNED PRIOR TO HOLE PUNCH BOTH SIDES.
4. KIT SHOWN MUST BE DISASSEMBLED PRIOR TO INSTALLATION ON PARENT ASSEMBLY.

ITEM	PART NO.	DESCRIPTION OR SIZE	QTY.
4	COML	NUT HEX 5/16-18 X .266"SS18-8	1
3	COML	HHCS 5/16-18 X 1.00 SS18-8	1
2		WASHER SQUARE 1", 5/16"ID	4
1	FNAL STOCK 1168-012000	BRAID, FLAT TINNED COPPER WOVEN	–

PARTS LIST

UNLESS OTHERWISE SPECIFIED			ORIGINATOR	Y.ORLOV	29-AUG-2012
0.X	0.XX	ANGLES	DRAWN	F.MCCONOLOGUE	29-AUG-2012
± 0.8	± 0.13	± 1°	CHECKED		
			APPROVED		

1. BREAK ALL SHARP EDGES 0.5 MAX.
2. DO NOT SCALE DRAWING.
3. DIMENSIONS BASED UPON ASME Y14.5M-1994
4. MAX. ALL MACH. SURFACES N8
5. DRAWING UNITS: METRIC

USED ON: ME-484686

MATERIAL: SEE PARTS LIST

FERMI NATIONAL ACCELERATOR LABORATORY
UNITED STATES DEPARTMENT OF ENERGY

ASTA – CAPTURE CAVITY 1 COLDMASS-CC1 ASSEMBLY BRAID 80K TO MC KIT

SCALE	DRAWING NUMBER	SHEET	REV
1:1	3886.801-MB-484707	1 OF 1	

CREATED WITH : Ideas12NXSeries GROUP: TD/DDCIS-DESIGN-COMPUTING

Created: 11:19:30 on 04-09-12 (D-M-Y) By: mccono State: 1-INITIAL

REV	DESCRIPTION	DRAWN / APPROVED	DATE / DATE
-	ER #10504 NEW RELEASE		

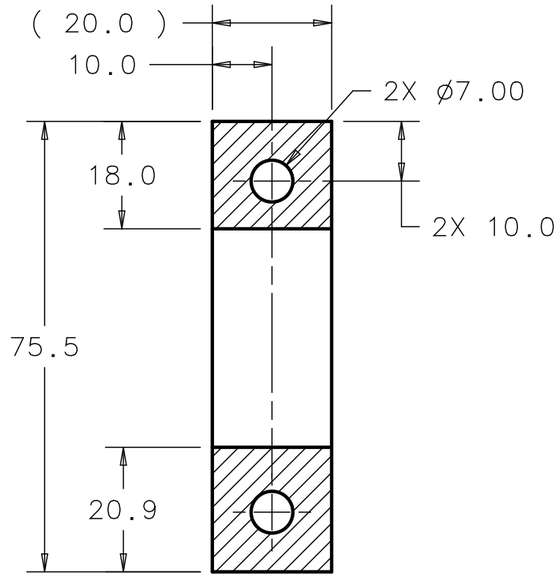

BRAID FLAT
PATTERN

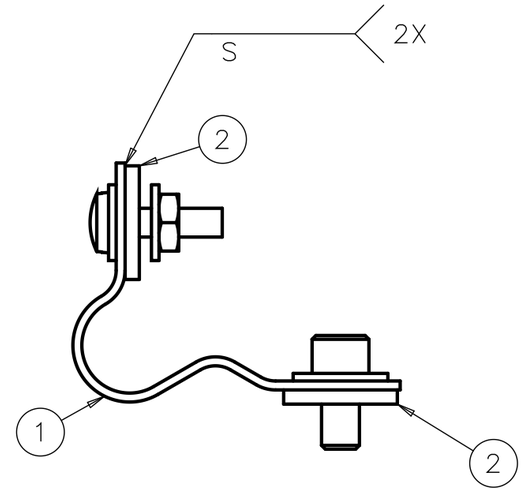

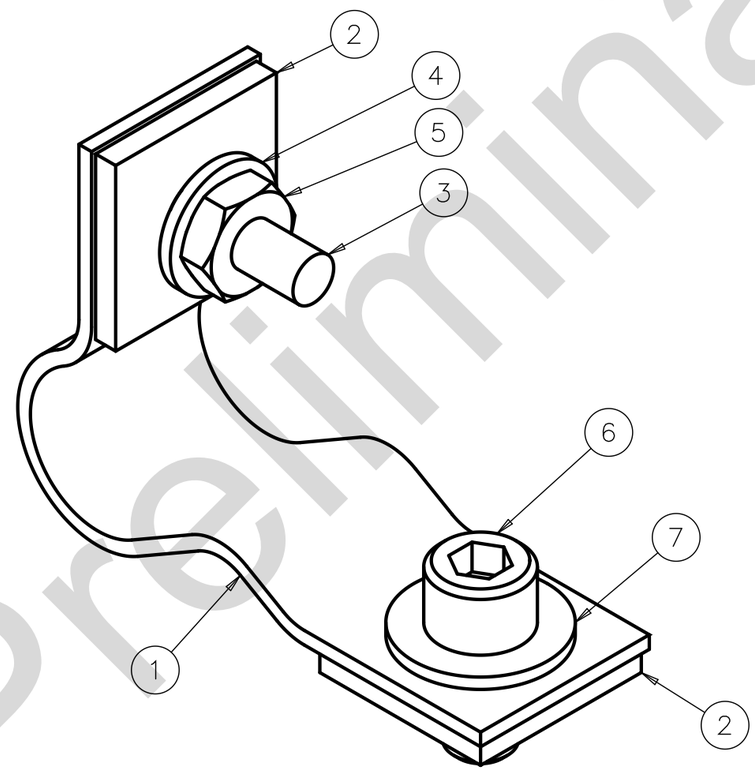

Preliminary

NOTES (UNLESS OTHERWISE SPECIFIED):

1. PART MUST BE FREE OF DIRT, GREASE, OIL AND CHIPS.
2. PART TO BE FREE OF ALL SHARP EDGES, CORNERS, AND BURRS.
3. CROSSHATCH SHOWS AREA TO BE TINNED PRIOR TO HOLE PUNCH BOTH SIDES.
4. KIT SHOWN, MUST BE DISASSEMBLED PRIOR TO INSTALLATION IN PARENT ASSEMBLY.

ITEM	PART NO.	DESCRIPTION OR SIZE	QTY.
7	COML	WSHR FLAT 1/4" 316SS	1
6	COML	SCR-SHC 1/4-20 1/2" LG 18-8SS	1
5	COML	NUT-HEX #10-24 316SS	1
4	COML	WSHR FLAT #10 316SS	2
3	COML	SCR-BHGH #10-24 3/4"LG 316SS	1
2		SPACER COPPER	2
1	FNAL STOCK 1168-012000	BRAID,FLAT TINNED COPPER WOVEN	-

PARTS LIST

UNLESS OTHERWISE SPECIFIED			ORIGINATOR	Y.ORLOV	28-AUG-2012
0.X	0.XX	ANGLE	DRAWN	F.MCCONOLOGUE	28-AUG-2012
± 0.8	± 0.13	± 1°	CHECKED		
			APPROVED		

1. BREAK ALL SHARP EDGES 0.5 MAX.
2. DO NOT SCALE DRAWING.
3. DIMENSIONS BASED UPON ASME Y14.5M-1994
4. MAX. ALL MACH. SURFACES N8
5. DRAWING UNITS: MM

USED ON: ME-484686

MATERIAL: SEE PARTS LIST

FERMI NATIONAL ACCELERATOR LABORATORY
UNITED STATES DEPARTMENT OF ENERGY

ASTA - CAPTURE CAVITY 1 COLDMASS-CC1 ASSEMBLY BP COOLING BRAID 5K KIT

SCALE	DRAWING NUMBER	SHEET	REV
1:1 & NOTED	3886.801-MB-484708	1 OF 1	

CREATED WITH : Ideas12NXSeries | GROUP: TD/DDCIS-DESIGN-COMPUTING

Created: 11:19:56 on 04-09-12 (D-M-Y) By: mccono State: 1-INITIAL

REV	DESCRIPTION	DRAWN / APPROVED	DATE / DATE
-	ER #10504 NEW RELEASE		

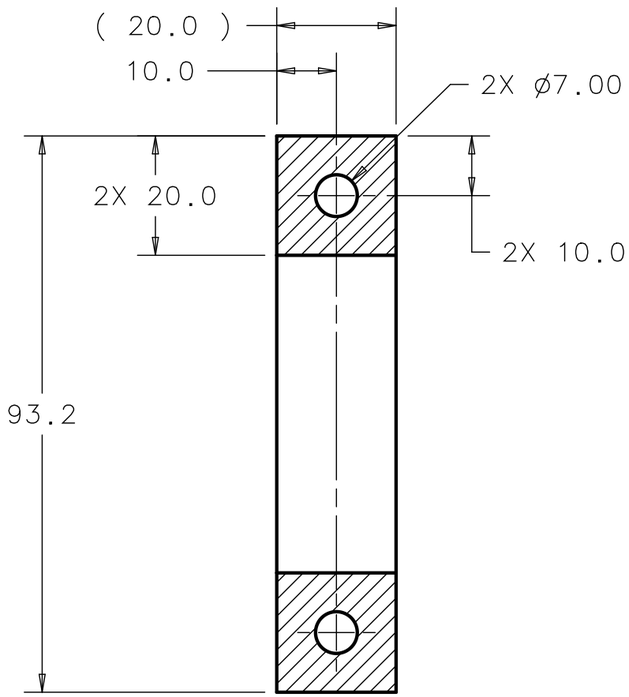

BRAID FLAT
PATTERN

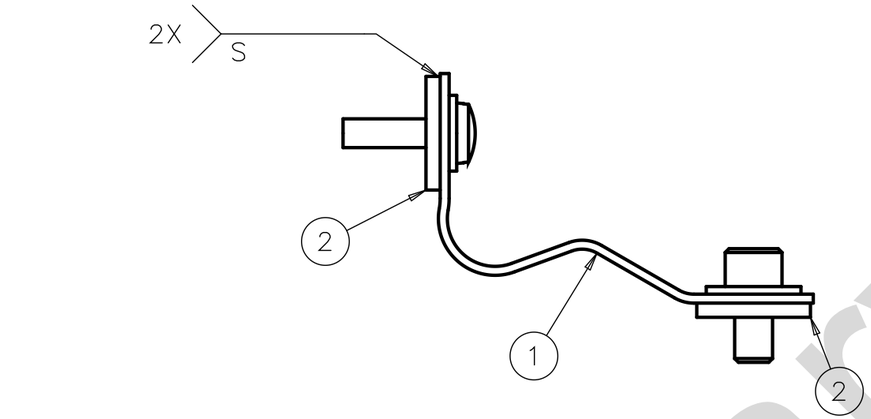

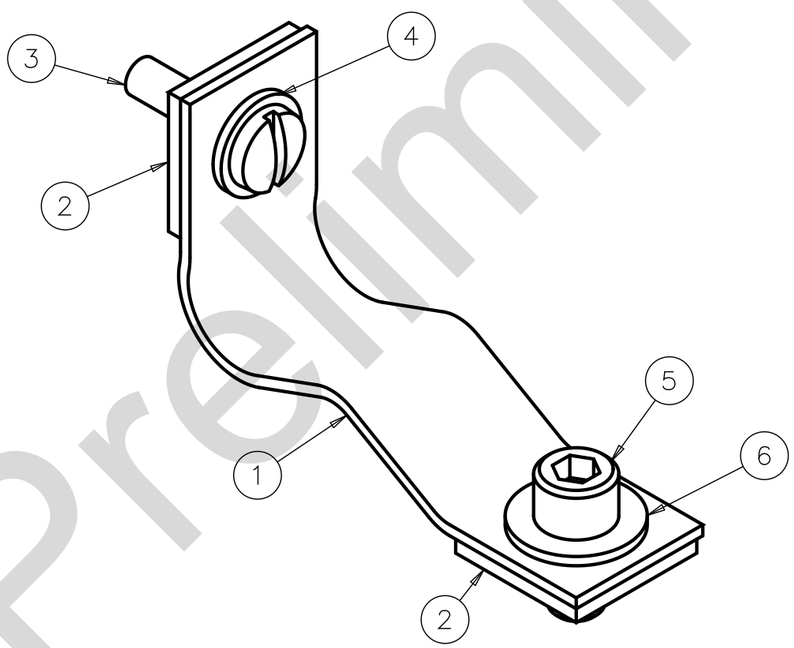

Preliminary

NOTES (UNLESS OTHERWISE SPECIFIED):

1. PART MUST BE FREE OF DIRT, GREASE, OIL AND CHIPS.
2. PART TO BE FREE OF ALL SHARP EDGES, CORNERS, AND BURRS.
3. CROSSHATCH SHOWS AREA TO BE TINNED PRIOR TO HOLE PUNCH BOTH SIDES.
4. KIT SHOWN, MUST BE DISASSEMBLED PRIOR TO INSTALLATION IN PARENT ASSEMBLY.

ITEM	PART NO.	DESCRIPTION OR SIZE	QTY.
6	COML	WSHR-FLAT 1/4" 316SS	1
5	COML	SCR-SHC 1/4-20 5/8"LG 316SS	1
4	COML	WSHR FLAT #10 316SS	1
3	COML	SCR-BDGH #10-24 3/4" LG 316SS	1
2		SPACER COPPER	2
1	FNAL STOCK 1168-012000	BRAID,FLAT TINNED COPPER WOVEN	-

PARTS LIST

UNLESS OTHERWISE SPECIFIED			ORIGINATOR	Y.ORLOV	28-AUG-2012
0.X	0.XX	ANGLE	DRAWN	F.MCCONOLOGUE	28-AUG-2012
± 0.8	± 0.13	± 1°	CHECKED		
			APPROVED		

1. BREAK ALL SHARP EDGES 0.5 MAX.
2. DO NOT SCALE DRAWING.
3. DIMENSIONS BASED UPON ASME Y14.5M-1994
4. MAX. ALL MACH. SURFACES N8
5. DRAWING UNITS: MM

USED ON: ME-484686

MATERIAL: SEE PARTS LIST

FERMI NATIONAL ACCELERATOR LABORATORY
UNITED STATES DEPARTMENT OF ENERGY

ASTA - CAPTURE CAVITY 1 COLDMASS-CC1 ASSEMBLY BP COOLING BRAID 80K KIT

SCALE	DRAWING NUMBER	SHEET	REV
1:1 & NOTED	3886.801-MB-484709	1 OF 1	

CREATED WITH : Ideas12NXSeries | GROUP: TD/DDCIS-DESIGN-COMPUTING

Created: 11:20:16 on 04-09-12 (D-M-Y) By: mccono State: 1-INITIAL

REV	DESCRIPTION	DRAWN	DATE
		APPROVED	DATE
–	ER #10504 NEW RELEASE		

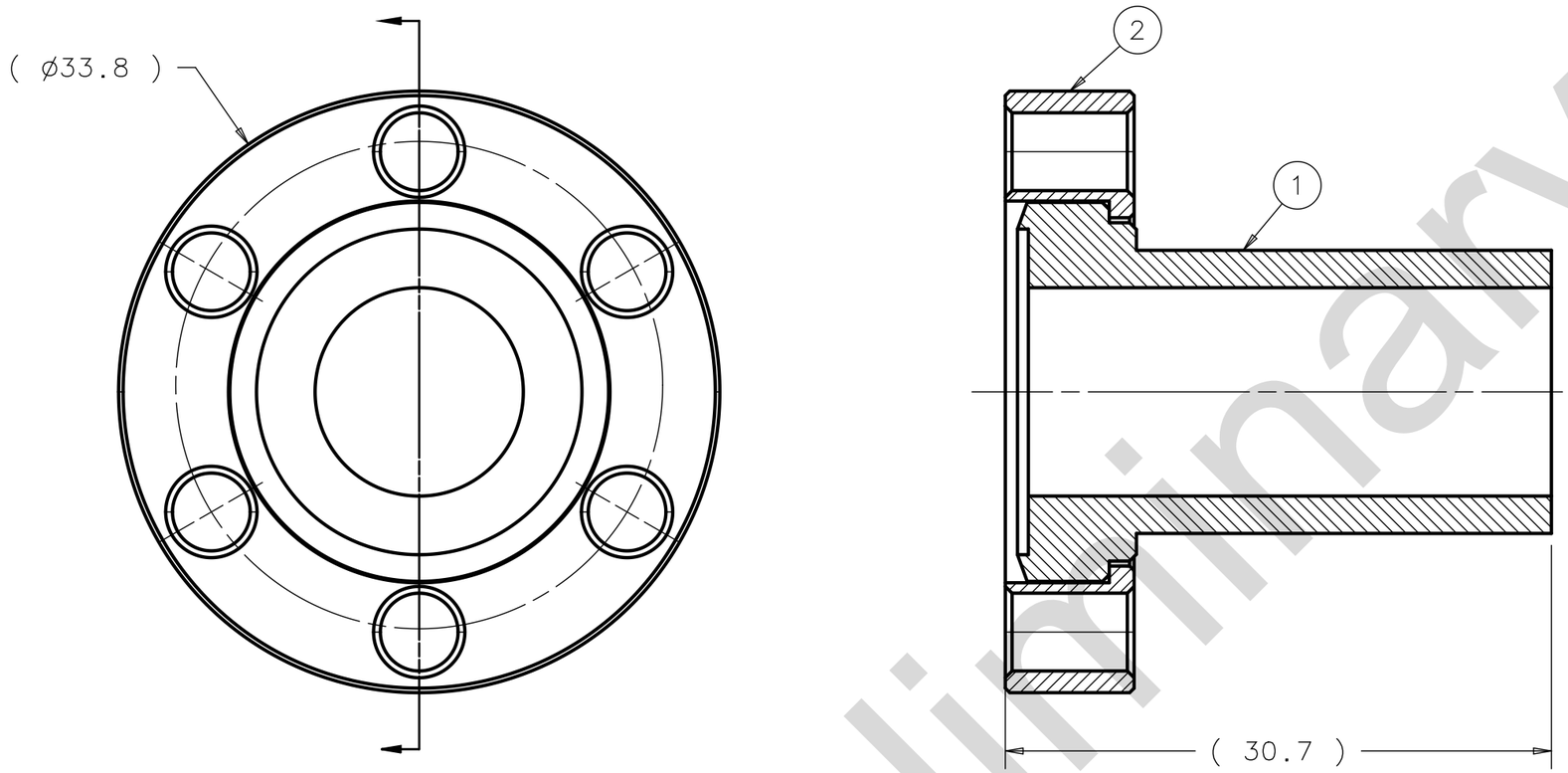

ITEM	PART NO.	DESCRIPTION OR SIZE	QTY.
2	COML	FLG-CF 1-1/3" OD ROT CL 304SS MDC 100000 SEE NOTE 3	1
1		CF FLANGE CUSTOM KNIFE EDGE	1

PARTS LIST

UNLESS OTHERWISE SPECIFIED			ORIGINATOR	Y.ORLOV	27-AUG-2012
0.X	0.XX	ANGLE	DRAWN	F.MCCONOLOGUE	27-AUG-2012
± - -	± - -	± - -	CHECKED		
			APPROVED		

1. BREAK ALL SHARP EDGES - - MAX.
2. DO NOT SCALE DRAWING.
3. DIMENSIONS BASED UPON ASME Y14.5M-1994
4. MAX. ALL MACH. SURFACES - - √
5. DRAWING UNITS: MM

USED ON: ME-484686

MATERIAL: SEE PARTS LIST

FERMI NATIONAL ACCELERATOR LABORATORY
UNITED STATES DEPARTMENT OF ENERGY

ASTA - CAPTURE CAVITY 1 COLDMASS-CC1 ASSEMBLY HELIUM FILL PORT ASSEMBLY

SCALE	DRAWING NUMBER	SHEET	REV
3:1	3886.801-MB-484710	1 OF 1	

CREATED WITH : Ideas12NXSeries GROUP: TD/DDCIS-DESIGN-COMPUTING

NOTES (UNLESS OTHERWISE SPECIFIED):

1. ASSEMBLY MUST BE FREE OF DIRT, GREASE, OIL AND CHIPS.
2. ASSEMBLY TO BE FREE OF ALL SHARP EDGES, CORNERS, AND BURRS.
3. ITEM 2 - REMOVE ROTATABLE INSERT AND SUBSTITUTE WITH ITEM 1.

Preliminary

REV	DESCRIPTION	DRAWN	DATE
		APPROVED	DATE

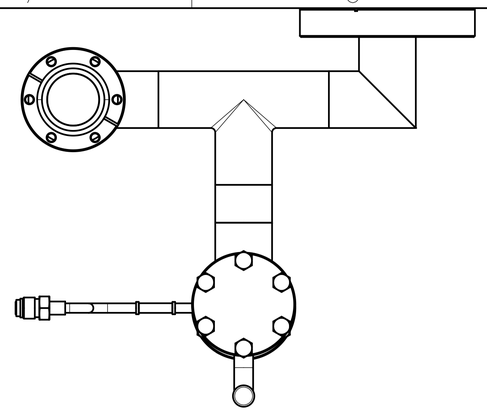

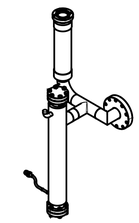

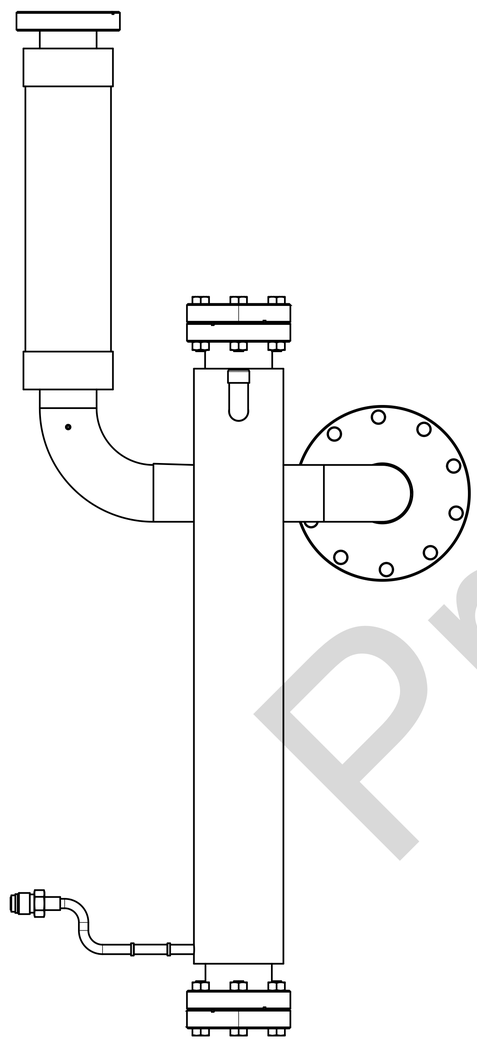

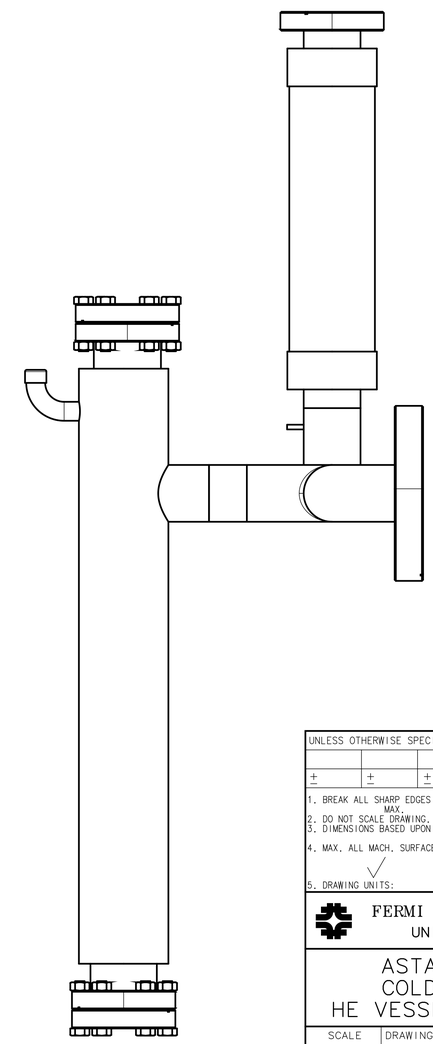

Preliminary

UNLESS OTHERWISE SPECIFIED			ORIGINATOR	Y.ORLOV	01-SEP-2012
			DRAWN	F.MCCONOLOGUE	01-SEP-2012
±	±	±	CHECKED		
			APPROVED		

1. BREAK ALL SHARP EDGES MAX.
2. DO NOT SCALE DRAWING.
3. DIMENSIONS BASED UPON
4. MAX. ALL MACH. SURFACES √
5. DRAWING UNITS:

USED ON: ME-484686

MATERIAL: SEE PARTS LIST

FERMI NATIONAL ACCELERATOR LABORATORY
UNITED STATES DEPARTMENT OF ENERGY

ASTA - CAPTURE CAVITY 1 COLDMASS - CC1 ASSEMBLY HE VESSEL LEVEL INDICATOR ASSY

SCALE	DRAWING NUMBER	SHEET	REV
1:2	3886.801-MD-484711	1 OF 1	

CREATED WITH : Ideas12NXSeries GROUP: TD/DDCIS-DESIGN-COMPUTING

REV	DESCRIPTION	DRAWN	DATE
		APPROVED	DATE
–	ER #10504 NEW RELEASE		

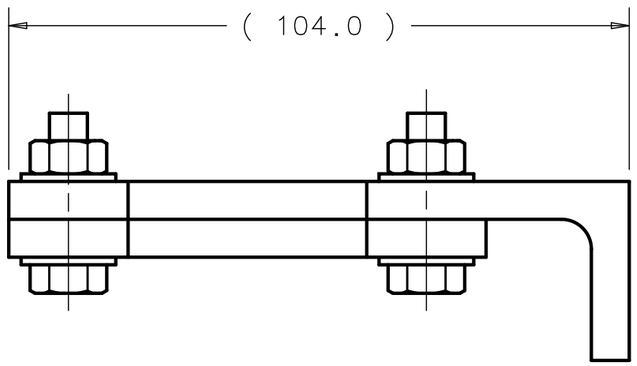

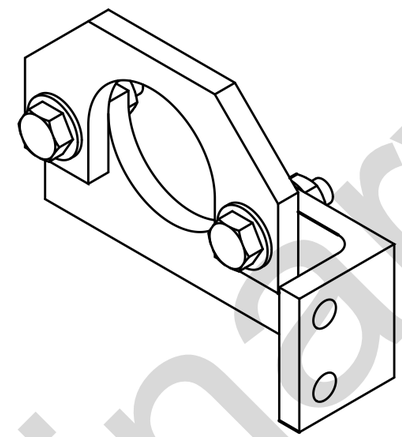

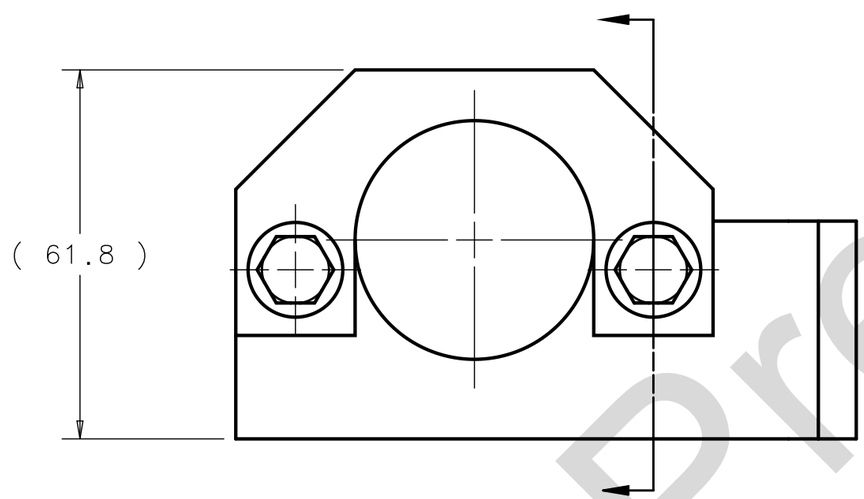

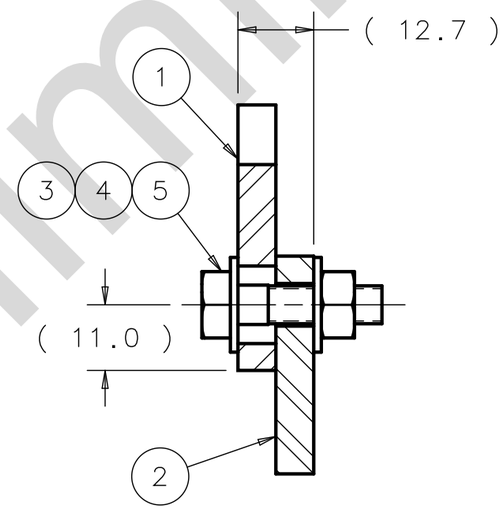

ITEM	PART NO.	DESCRIPTION OR SIZE	QTY.
5	COML	NUT - HEX - 1/4-28 - 18-8 SS	2
4	COML	WASHER - FLAT - ø.250 - 18-8 SS	4
3	COML	HHCS - 1/4-28 X 1.0 LG - 18-8 SS	2
2	MB-	BRACKET - 5K - LOWER	1
1	MB-	BRACKET - 5K - UPPER	1

PARTS LIST

UNLESS OTHERWISE SPECIFIED			ORIGINATOR	Y.ORLOV	21-AUG-2012
0.X	0.XX	ANGLE	DRAWN	F.MCCONOLOGUE	28-AUG-2012
± --	± --	± --	CHECKED		
			APPROVED		

1. BREAK ALL SHARP EDGES -- MAX.
2. DO NOT SCALE DRAWING.
3. DIMENSIONS BASED UPON ASME Y14.5M-1994
4. MAX. ALL MACH. SURFACES -- √
5. DRAWING UNITS: MM

USED ON: ME-484686

MATERIAL: SEE PARTS LIST

FERMI NATIONAL ACCELERATOR LABORATORY
UNITED STATES DEPARTMENT OF ENERGY

ASTA - CAPTURE CAVITY 1 COLDMASS - CC1 ASSEMBLY SUPPORT - 5K - PIPE KIT

SCALE	DRAWING NUMBER	SHEET	REV
1:1	3886.801-MB-484712	1 OF 1	

CREATED WITH : Ideas12NXSeries GROUP: TD/DDCIS-DESIGN-COMPUTING

NOTES (UNLESS OTHERWISE SPECIFIED):

1. ASSEMBLY TO BE FREE OF DIRT, GREASE, OIL, AND CHIPS.
2. KIT SHOWN; MUST BE DISASSEMBLED PRIOR TO INSTALLATION IN PARENT ASSEMBLY.

Preliminary

REV	DESCRIPTION	DRAWN	DATE
		APPROVED	DATE
–	ER #10504 NEW RELEASE		

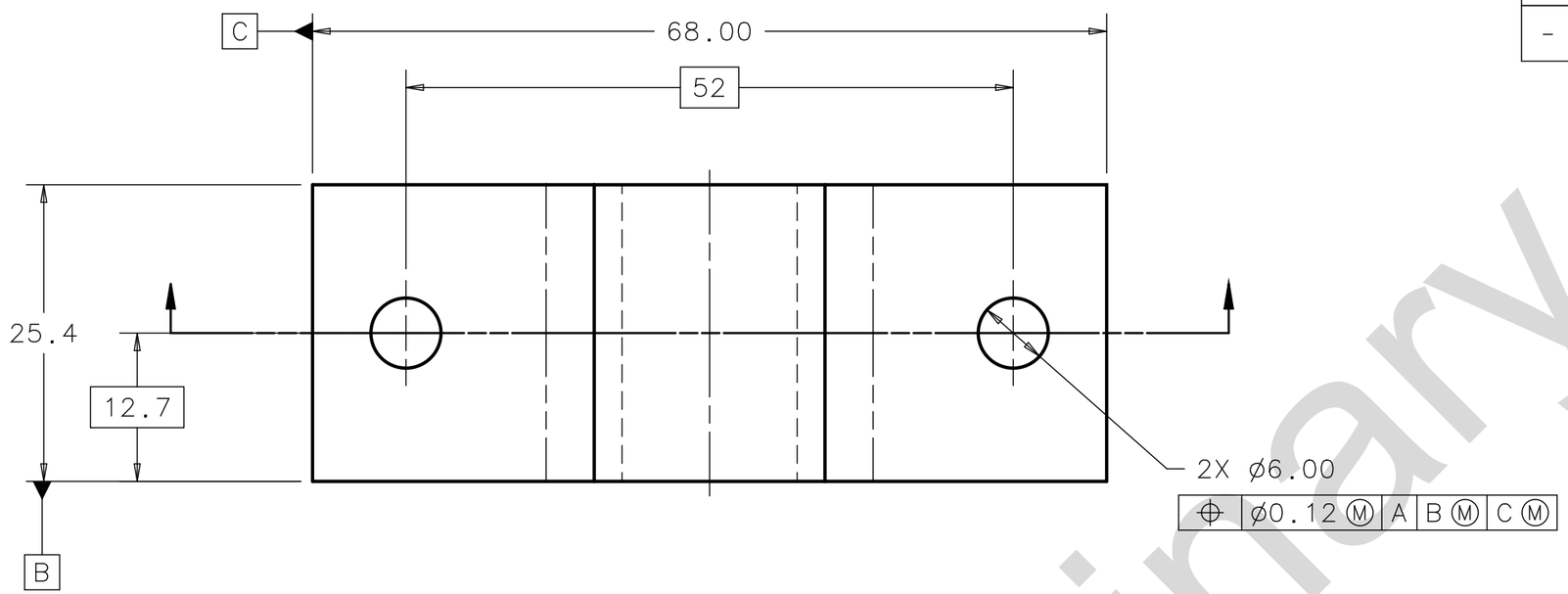

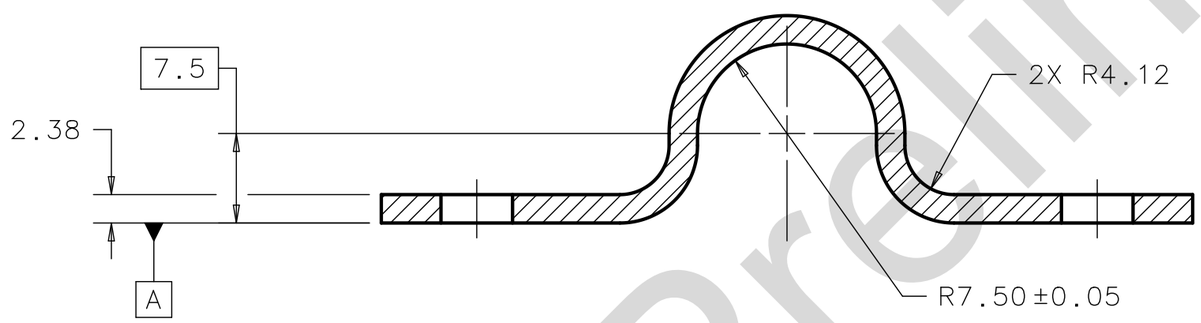

NOTES (UNLESS OTHERWISE SPECIFIED):

1. PART MUST BE FREE OF DIRT, GREASE, OIL AND CHIPS.
2. PART TO BE FREE OF ALL SHARP EDGES, CORNERS, AND BURRS.
3. FREE LENGTH TO BE 86.0 MM
4. TRAILING ZEROS ON DIMENSION DENOTES TOLERANCE.

Preliminary

UNLESS OTHERWISE SPECIFIED			ORIGINATOR	Y.ORLOV	28-AUG-2012
0.X	0.XX	ANGLE	DRAWN	F.MCCONOLOGUE	28-AUG-2012
± 0.5	± 0.12	±0.5°	CHECKED		
1. BREAK ALL SHARP EDGES 0.5 MAX. 2. DO NOT SCALE DRAWING. 3. DIMENSIONS BASED UPON ASME Y14.5M-1994 4. MAX. ALL MACH. SURFACES N8 5. DRAWING UNITS: MM			APPROVED		
			USED ON	ME-484686	
			MATERIAL	STNLS STL 316L	

FERMI NATIONAL ACCELERATOR LABORATORY
UNITED STATES DEPARTMENT OF ENERGY

ASTA – CAPTURE CAVITY 1
COLDMASS-CC1 ASSEMBLY
CLAMP 5K PIPE

SCALE	DRAWING NUMBER	SHEET	REV
2:1	3886.801-MB-484713	1 OF 1	

CREATED WITH : Ideas12NXSeries | GROUP: TD/DDCIS-DESIGN-COMPUTING

Created: 11:21:23 on 04-09-12 (D-M-Y) By: mccono State: 1-INITIAL

REV	DESCRIPTION	DRAWN	DATE
		APPROVED	DATE
–	ER #10504 NEW RELEASE		

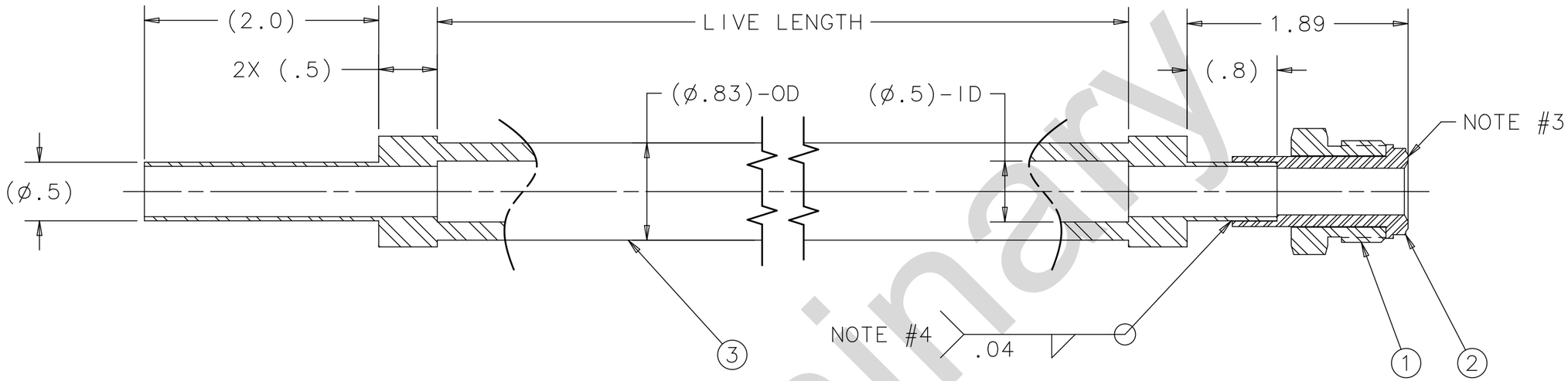

Preliminary

NOTES (UNLESS OTHERWISE SPECIFIED):

1. HOSE IS HOSEMASTER MASTERFEX: AF7550, 1/2"-ID. 21'-LIVE LENGTH.
   FITTINGS: TUBE 1/2-OD, .049"-WALL, 2" LENGTH, T304 FOR BOTH ENDS.
   HELIUM LEAK TEST: $2X10^{-9}$ ATM. CC/SEC.

2. WELDMENT MUST BE FREE OF DIRT, GREASE, OIL AND CHIPS.

3. SEALING SURFACES MUST BE FREE OF SCRATCHES AND NICKS
   WITH NO RADIAL SCORING.

4. ALL WELDS TO BE VACUUM LEAK TIGHT.
   LEAK TEST: NO LEAK SHALL BE DETECTABLE ON THE MOST SENSITIVE SCALE
   OF A HELIUM LEAK DETECTOR WITH A MINIMUM SENSITIVITY OF 10^{-9} ATM. CC/SEC.

5. ALL WELDS TO BE PRESSURE CHECKED TO 58 P.S.I.

3	COM'L	SEE NOTE #1	1
2	COM'L	HY-LOK SOCKET WELD GLAND H-ZGS-8S	1
1	COM'L	HY-LOK MALE NUT H-ZMN-8	1

UNLESS OTHERWISE SPECIFIED	ORIGINATOR	Y.ORLOV	04-SEP-2012
	DRAWN	F.MCCONOLOGUE	04-SEP-2012
± ± ±	CHECKED		
1. BREAK ALL SHARP EDGES MAX. 2. DO NOT SCALE DRAWING. 3. DIMENSIONS BASED UPON	APPROVED		
4. MAX. ALL MACH. SURFACES √	USED ON	ME-484684	
5. DRAWING UNITS:	MATERIAL	SEE PARTS LIST	

FERMI NATIONAL ACCELERATOR LABORATORY
UNITED STATES DEPARTMENT OF ENERGY

ASTA - CAPTURE CAVITY 1
CC1 - UPGRADE ASSEMBLY
HOSE-80K 21-INCH LIVE 0.50 WLDMT

SCALE	DRAWING NUMBER	SHEET	REV
1:1	3886.801-MB-484714	1 OF 1	

CREATED WITH : Ideas12NXSeries | GROUP: TD/DDCIS-DESIGN-COMPUTING

REV	DESCRIPTION	DRAWN	DATE
		APPROVED	DATE
–	ER #10504 NEW RELEASE		

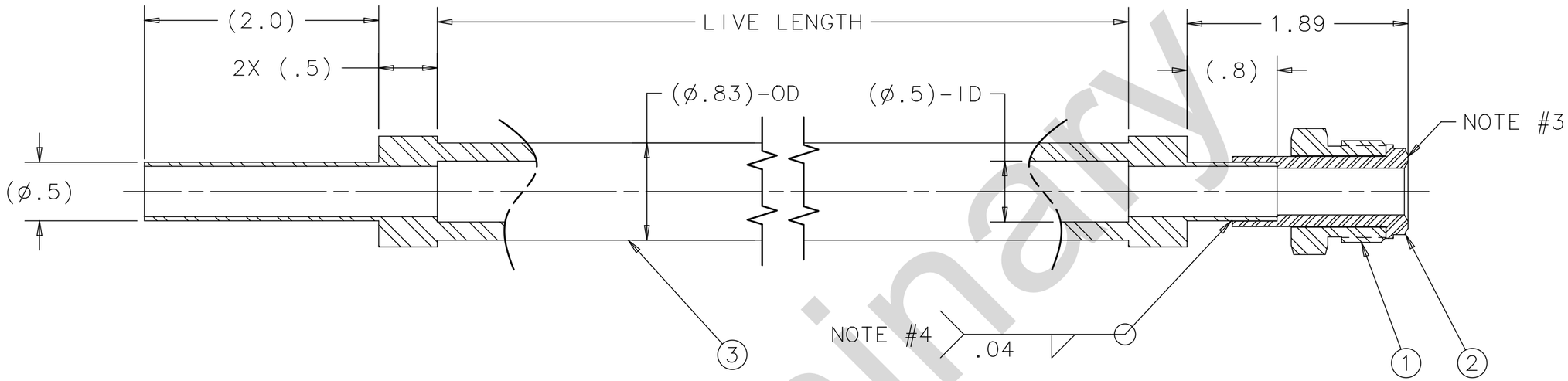

Preliminary

NOTES (UNLESS OTHERWISE SPECIFIED):

1. HOSE IS HOSEMASTER MASTERFEX: AF7550, 1/2"-ID. 15'-LIVE LENGTH.
   FITTINGS: TUBE 1/2-OD, .049"-WALL, 2" LENGTH, T304 FOR BOTH ENDS.
   HELIUM LEAK TEST: $2X10^{-9}$ ATM. CC/SEC.

2. WELDMENT MUST BE FREE OF DIRT, GREASE, OIL AND CHIPS.

3. SEALING SURFACES MUST BE FREE OF SCRATCHES AND NICKS
   WITH NO RADIAL SCORING.

4. ALL WELDS TO BE VACUUM LEAK TIGHT.
   LEAK TEST: NO LEAK SHALL BE DETECTABLE ON THE MOST SENSITIVE SCALE
   OF A HELIUM LEAK DETECTOR WITH A MINIMUM SENSITIVITY OF 10^{-9} ATM. CC/SEC.

5. ALL WELDS TO BE PRESSURE CHECKED TO 58 P.S.I.

3	COM'L	SEE NOTE #1	1
2	COM'L	HY-LOK SOCKET WELD GLAND H-ZGS-8S	1
1	COM'L	HY-LOK MALE NUT H-ZMN-8	1

UNLESS OTHERWISE SPECIFIED	ORIGINATOR	Y.ORLOV	04-SEP-2012
	DRAWN	F.MCCONOLOGUE	04-SEP-2012
± ± ±	CHECKED		
1. BREAK ALL SHARP EDGES MAX. 2. DO NOT SCALE DRAWING. 3. DIMENSIONS BASED UPON	APPROVED		
4. MAX. ALL MACH. SURFACES √	USED ON	ME-484684	
5. DRAWING UNITS:	MATERIAL	SEE PARTS LIST	

FERMI NATIONAL ACCELERATOR LABORATORY
UNITED STATES DEPARTMENT OF ENERGY

ASTA - CAPTURE CAVITY 1
CC1 - UPGRADE ASSEMBLY
HOSE-80K 15-INCH LIVE 0.50 WLDMT

SCALE	DRAWING NUMBER	SHEET	REV
1:1	3886.801-MB-484715	1 OF 1	

CREATED WITH : Ideas12NXSeries GROUP: TD/DDCIS-DESIGN-COMPUTING

REV	DESCRIPTION	DRAWN	DATE
		APPROVED	DATE
–	ER #10504 NEW RELEASE		

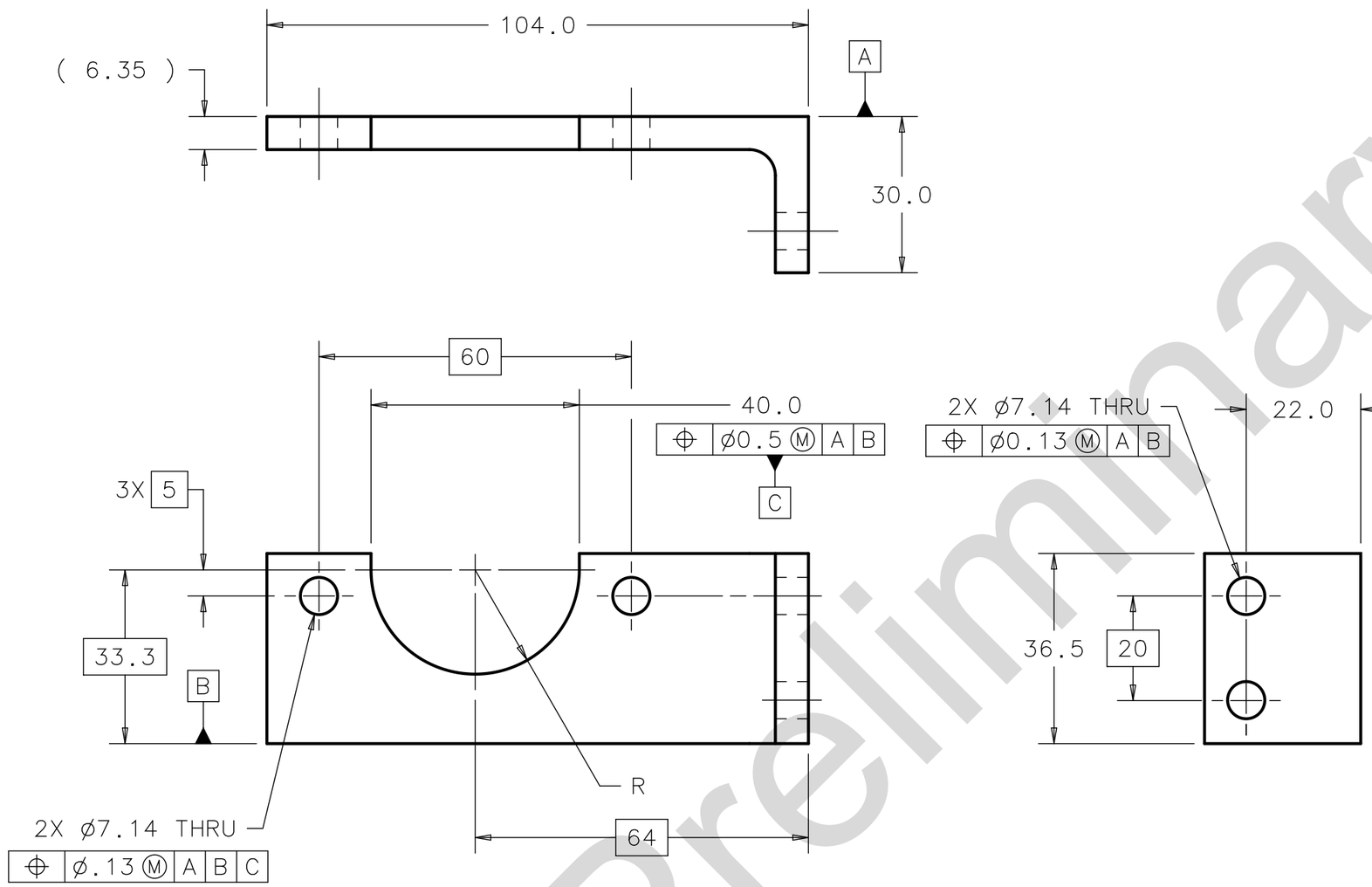

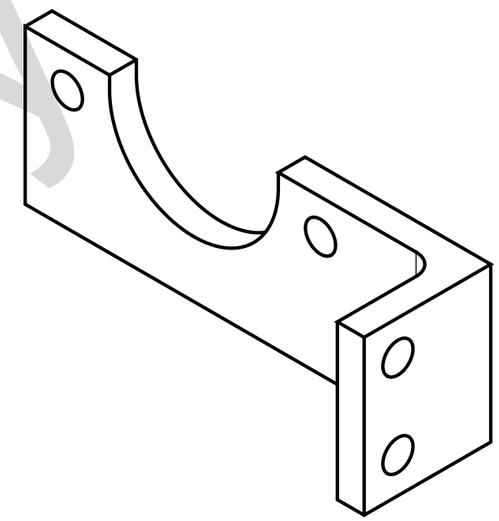

Preliminary

NOTES (UNLESS OTHERWISE SPECIFIED):

1. PART TO BE FREE OF DIRT, GREASE, OIL, AND CHIPS.
2. TRAILING ZEROS ON DIMENSIONS DENOTE TOLERANCE.

UNLESS OTHERWISE SPECIFIED			ORIGINATOR	Y.ORLOV	21-AUG-2012
0.X	0.XX	ANGLE	DRAWN	M.BATTISTA	28-AUG-2012
± 0.5	± 0.13	± --	CHECKED		
			APPROVED		

1. BREAK ALL SHARP EDGES 0.5 MAX.
2. DO NOT SCALE DRAWING.
3. DIMENSIONS BASED UPON ASME Y14.5M-1994
4. MAX. ALL MACH. SURFACES 3.2
5. DRAWING UNITS: MM

USED ON

MATERIAL
ANGLE - 5" X 5" X 1/4"
6061-T6 ALUMINUM

FERMI NATIONAL ACCELERATOR LABORATORY
UNITED STATES DEPARTMENT OF ENERGY

ASTA - CAPTURE CAVITY 1 COLDMASS - CC1 ASSEMBLY BRACKET - 5K - LOWER

SCALE	DRAWING NUMBER	SHEET	REV
1:1	3886.801-MB-	1 OF 1	

CREATED WITH : Ideas12NXSeries | GROUP: TD/DDCIS-DESIGN-COMPUTING

Created: 10:14:32 on 29-08-12 (D-M-Y) By: battista State: 1-INITIAL

REV	DESCRIPTION	DRAWN	DATE
		APPROVED	DATE
-	ER #10504 NEW RELEASE		

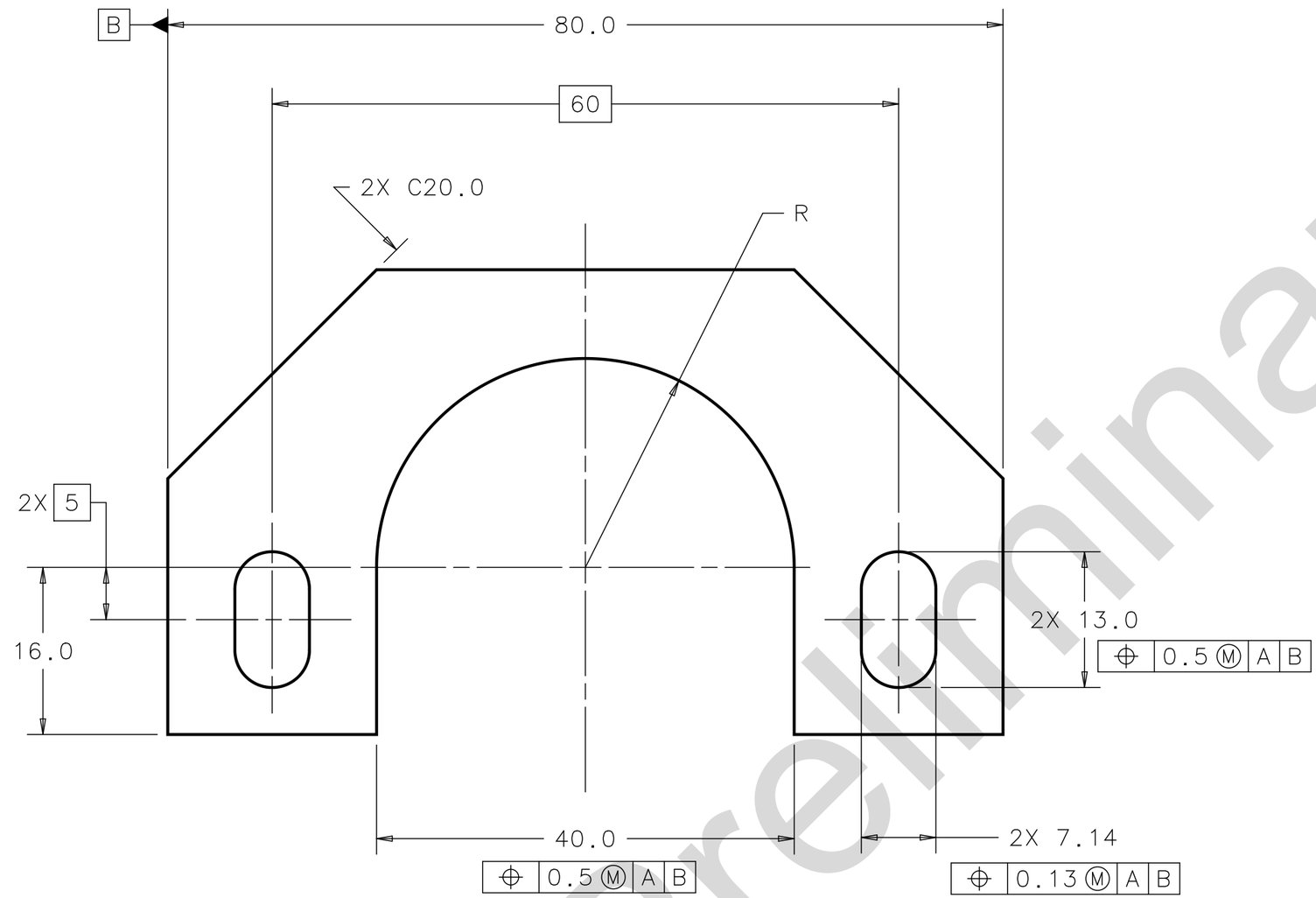

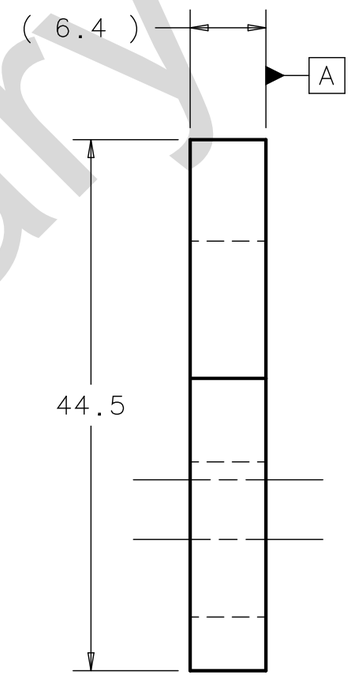

Preliminary

NOTES (UNLESS OTHERWISE SPECIFIED):

1. PART TO BE FREE OF DIRT, GREASE, OIL, AND CHIPS.
2. TRAILING ZEROS ON DIMENSIONS DENOTE TOLERANCE.

UNLESS OTHERWISE SPECIFIED			ORIGINATOR	Y.ORLOV	21-AUG-2012
0.X	0.XX	ANGLE	DRAWN	M.BATTISTA	28-AUG-2012
± 0.5	± 0.13	± 1°	CHECKED		
			APPROVED		

1. BREAK ALL SHARP EDGES 0.5 MAX.
2. DO NOT SCALE DRAWING.
3. DIMENSIONS BASED UPON ASME Y14.5M-1994
4. MAX. ALL MACH. SURFACES 3.2
5. DRAWING UNITS: MM

USED ON

MATERIAL
1/4" THICK PLATE
6061-T6 ALUMINUM

FERMI NATIONAL ACCELERATOR LABORATORY
UNITED STATES DEPARTMENT OF ENERGY

ASTA - CAPTURE CAVITY 1 COLDMASS - CC1 ASSEMBLY BRACKET - 5K - UPPER

SCALE	DRAWING NUMBER	SHEET	REV
2:1	3886.801-MB-	1 OF 1	

CREATED WITH : Ideas12NXSeries | GROUP: TD/DDCIS-DESIGN-COMPUTING

Created: 10:14:50 on 29-08-12 (D-M-Y) By: battista State: 1-INITIAL

REV	DESCRIPTION	DRAWN	DATE
		APPROVED	DATE
–	ER #10504 NEW RELEASE		

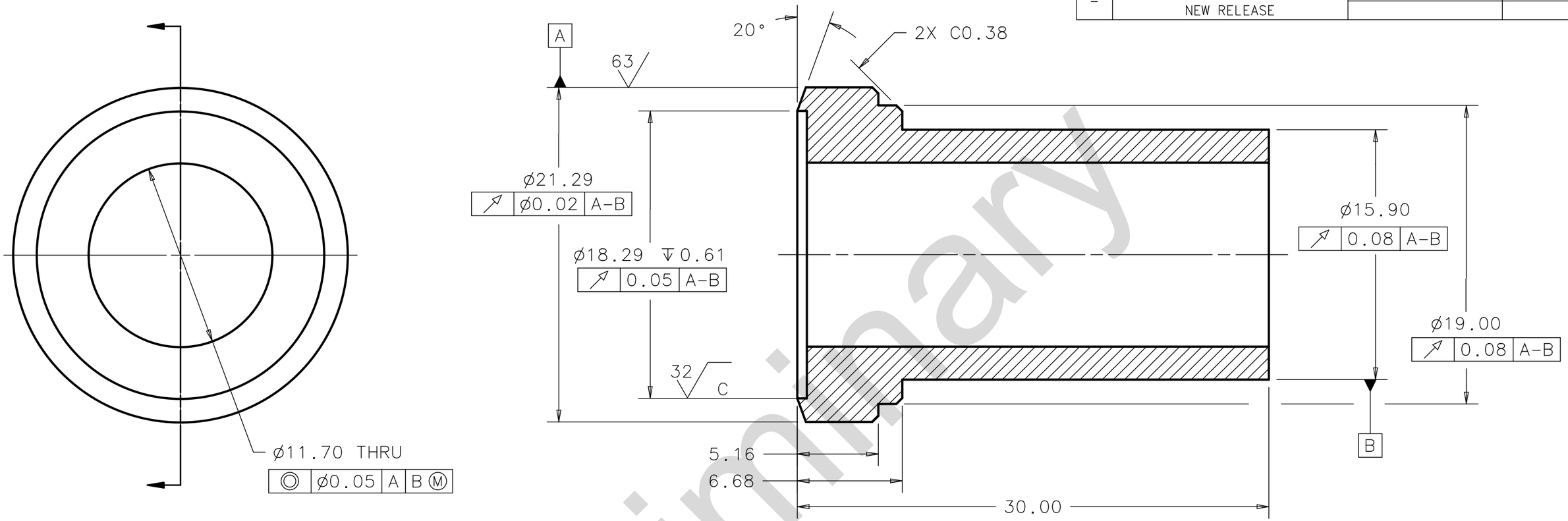

Preliminary

NOTES (UNLESS OTHERWISE SPECIFIED):

1. PART MUST BE FREE OF DIRT, GREASE, OIL AND CHIPS.
2. PART TO BE FREE OF ALL SHARP EDGES, CORNERS, AND BURRS.
3. TRAILING ZEROS ON DIMENSIONS DENOTE TOLERANCE.
4. DIMENSIONS APPLY AFTER ALL FINISHING.
5. SEALING SURFACES MUST BE FREE OF SCRATCHES AND NICKS WITH NO RADIAL SCORING.

UNLESS OTHERWISE SPECIFIED			ORIGINATOR	Y.ORLOV	27-AUG-2012
0.X	0.XX	ANGLE	DRAWN	J.COGHILL	27-AUG-2012
± 0.8	± 0.13	±0.5°	CHECKED		
1. BREAK ALL SHARP EDGES 0.5 MAX. 2. DO NOT SCALE DRAWING. 3. DIMENSIONS BASED UPON ASME Y14.5M-1994 4. MAX. ALL MACH. SURFACES 125 5. DRAWING UNITS: MM			APPROVED		
			USED ON		
			MATERIAL	TITANIUM GRADE 2	

FERMI NATIONAL ACCELERATOR LABORATORY
UNITED STATES DEPARTMENT OF ENERGY

ASTA – CAPTURE CAVITY 1 COLDMASS-CC1 ASSEMBLY CF FLANGE CUSTOM KNIFE EDGE

SCALE	DRAWING NUMBER	SHEET	REV
4:1 & NOTED	3886.801-MB-	1 OF 1	

CREATED WITH : Ideas12NXSeries | GROUP: TD/DDCIS-DESIGN-COMPUTING

Created: 07:46:57 on 29-08-12 (D-M-Y) By: coghill State: 1-INITIAL

REV	DESCRIPTION	DRAWN	DATE
		APPROVED	DATE
–	ER #10504 NEW RELEASE		

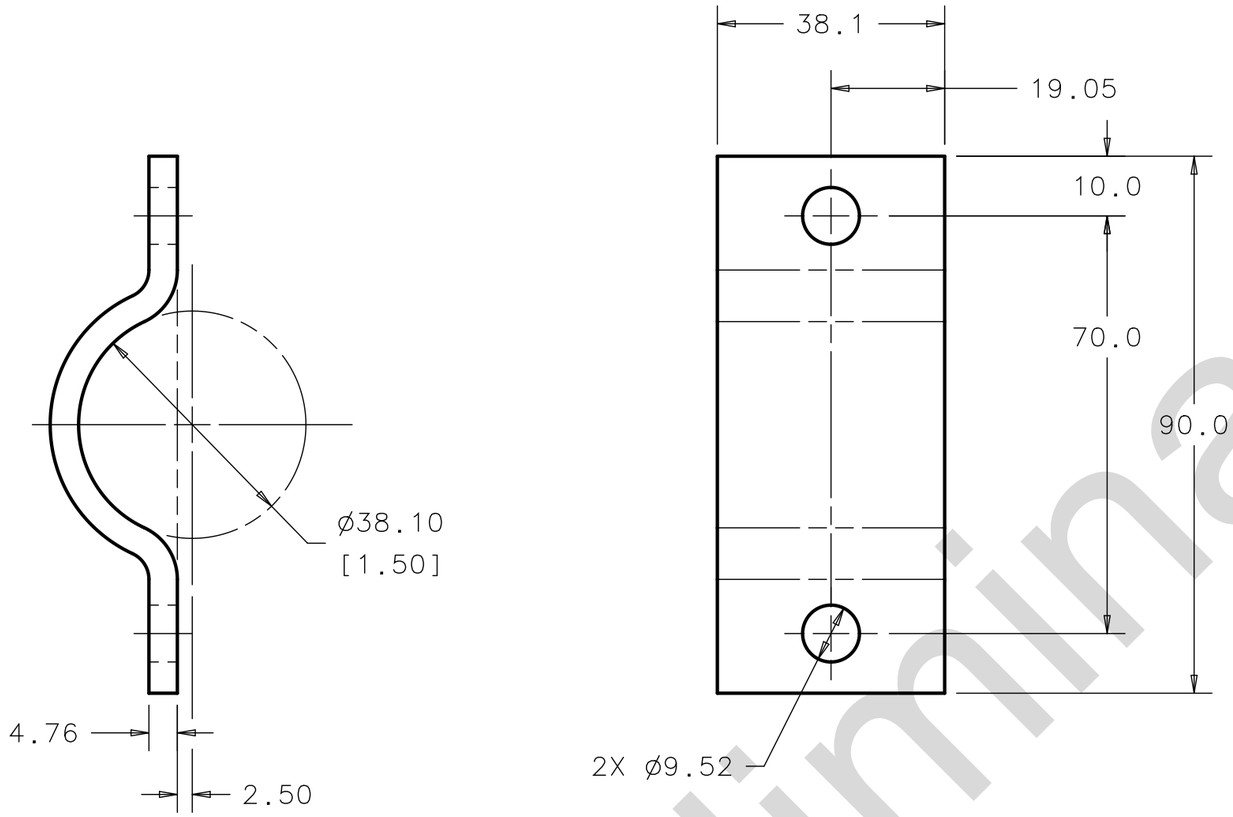

Preliminary

NOTES (UNLESS OTHERWISE SPECIFIED):

1. PART MUST BE FREE OF DIRT, GREASE, OIL AND CHIPS.
2. PART TO BE FREE OF ALL SHARP EDGES, CORNERS, AND BURRS.
3. TRAILING ZEROS ON DIMENSIONS DENOTE TOLERANCE.

UNLESS OTHERWISE SPECIFIED			ORIGINATOR	Y.ORLOV	29-AUG-2012
0.X	0.XX	ANGLES	DRAWN	J.KURNAT	29-AUG-2012
± 0.5	± 0.13	± 1°	CHECKED		
1. BREAK ALL SHARP EDGES 0.5 MAX. 2. DO NOT SCALE DRAWING. 3. DIMENSIONS BASED UPON ASME Y14.5M-1994 4. MAX. ALL MACH. SURFACES N8 5. DRAWING UNITS: METRIC			APPROVED		
			USED ON		
			MATERIAL	COPPER 101	

FERMI NATIONAL ACCELERATOR LABORATORY
UNITED STATES DEPARTMENT OF ENERGY

ASTA – CAPTURE CAVITY 1
COLDMASS-CC1 ASSEMBLY
CLAMP HEAT-SINK 1.5"ID

SCALE	DRAWING NUMBER	SHEET	REV
1:1	3886.801-MB-	1 OF 1	

CREATED WITH : Ideas12NXSeries | GROUP: TD/DDCIS-DESIGN-COMPUTING

Created: 10:12:18 on 29-08-12 (D-M-Y) By: kurnat State: 1-INITIAL

REV	DESCRIPTION	DRAWN / APPROVED	DATE / DATE
-	ER #10504 NEW RELEASE		

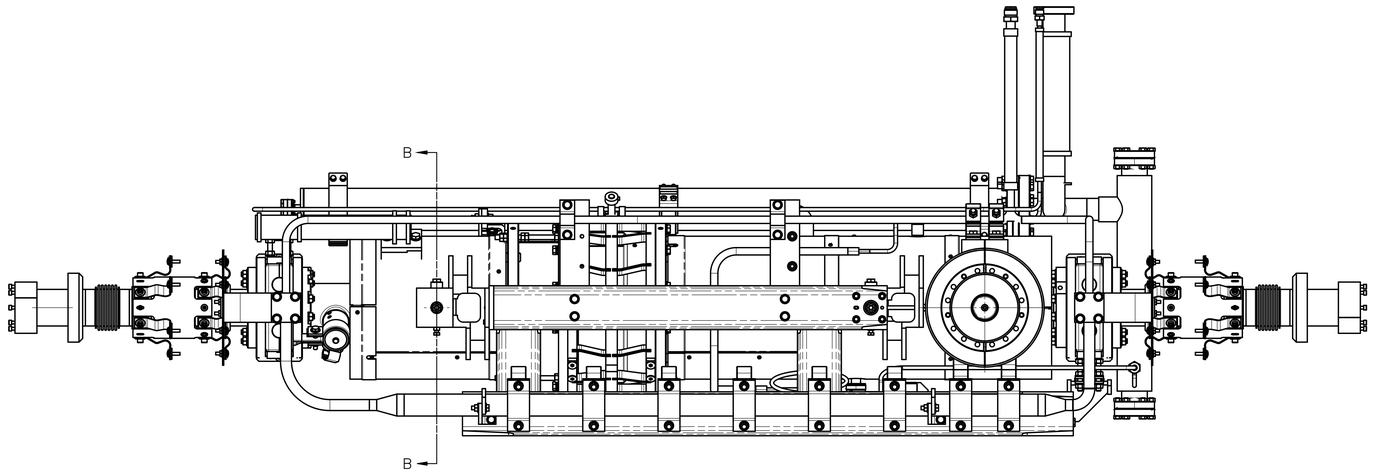

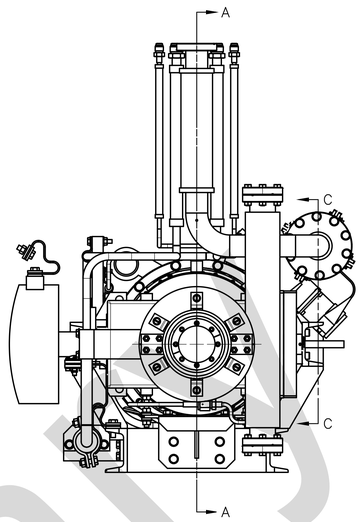

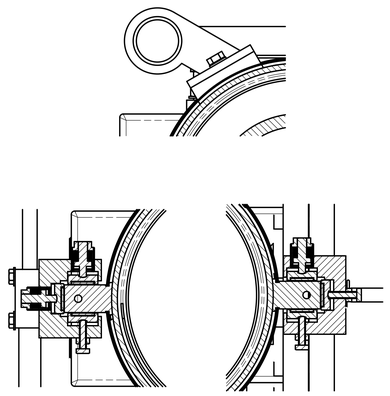

SECTION B-B DETAILS
1:2

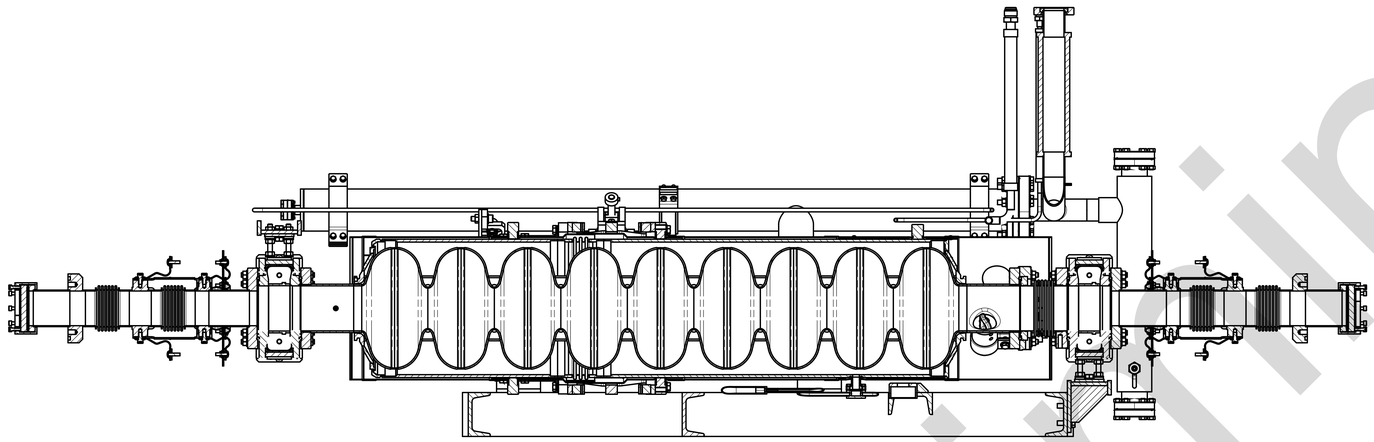

SECTION A-A
SCALE 1/4

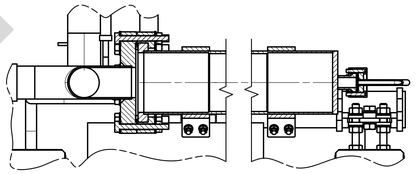

SECTION C-C
SCALE 3:8

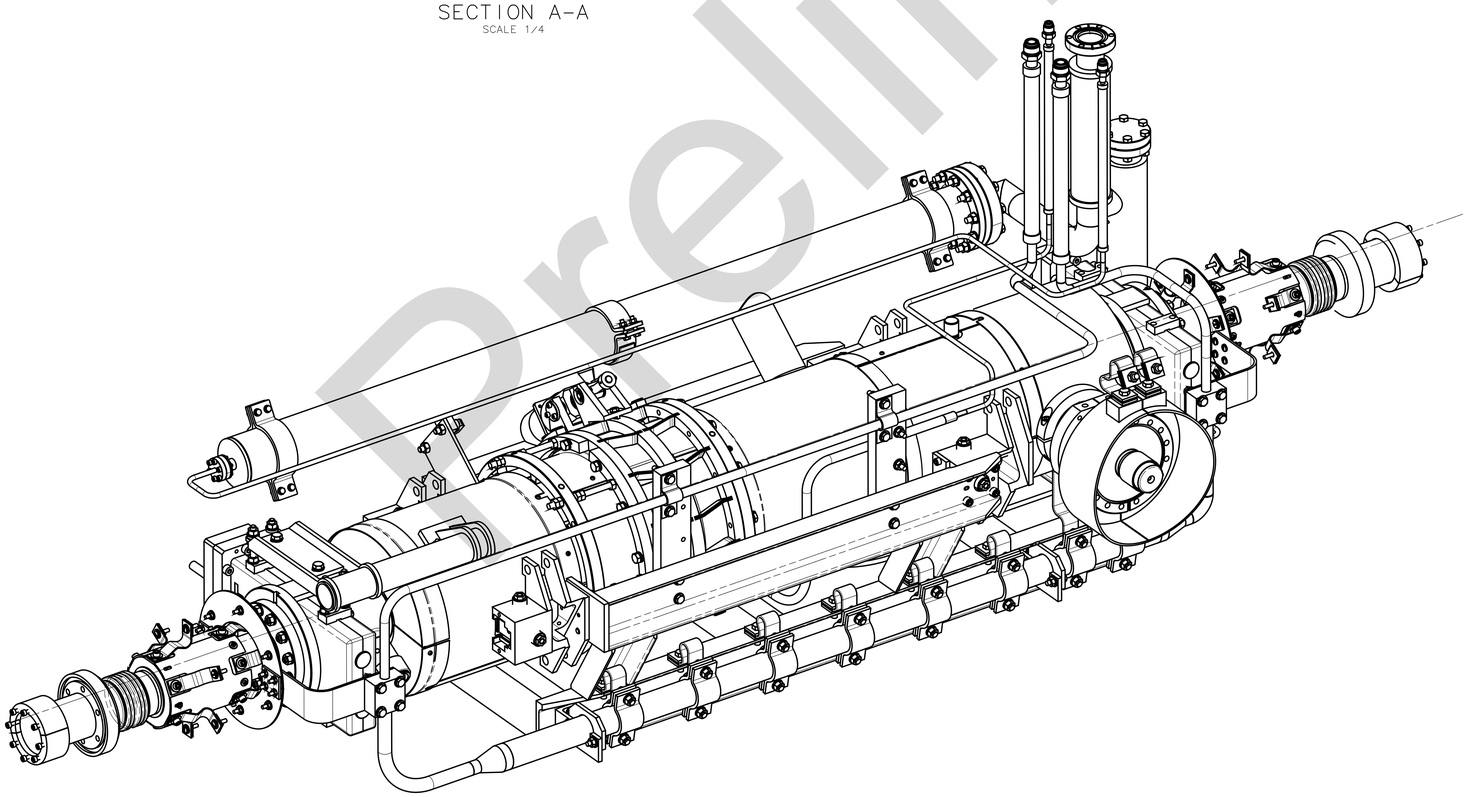

Preliminary

ITEM	PART NO.	DESCRIPTION OR SIZE	QTY.
1	ME-485XXX	CC1 STRING ASSEMBLY	1

PARTS LIST

UNLESS OTHERWISE SPECIFIED	ORIGINATOR	Y.ORLOV 29-AUG-2012
	DRAWN	J.KURNAT 29-AUG-2012
± ± ±	CHECKED	
1. BREAK ALL SHARP EDGES MAX.	APPROVED	
2. DO NOT SCALE DRAWING. 3. DIMENSIONS BASED UPON	USED ON	
4. MAX. ALL MACH. SURFACES	MATERIAL	SEE PARTS LIST
5. DRAWING UNITS:		

FERMI NATIONAL ACCELERATOR LABORATORY
UNITED STATES DEPARTMENT OF ENERGY

ASTA - CAPTURE CAVITY 1
CC1-UPGRADE ASSEMBLY
COLDMASS-CC1 ASSEMBLY

SCALE	DRAWING NUMBER	SHEET	REV
1:4 & AS NOTED	3886.801-ME-	1 OF 1	

CREATED WITH : Ideas12NXSeries GROUP: TD/DDCIS-DESIGN-COMPUTING

REV	DESCRIPTION	DRAWN	DATE
		APPROVED	DATE
	ER# 10504 NEW RELEASE		

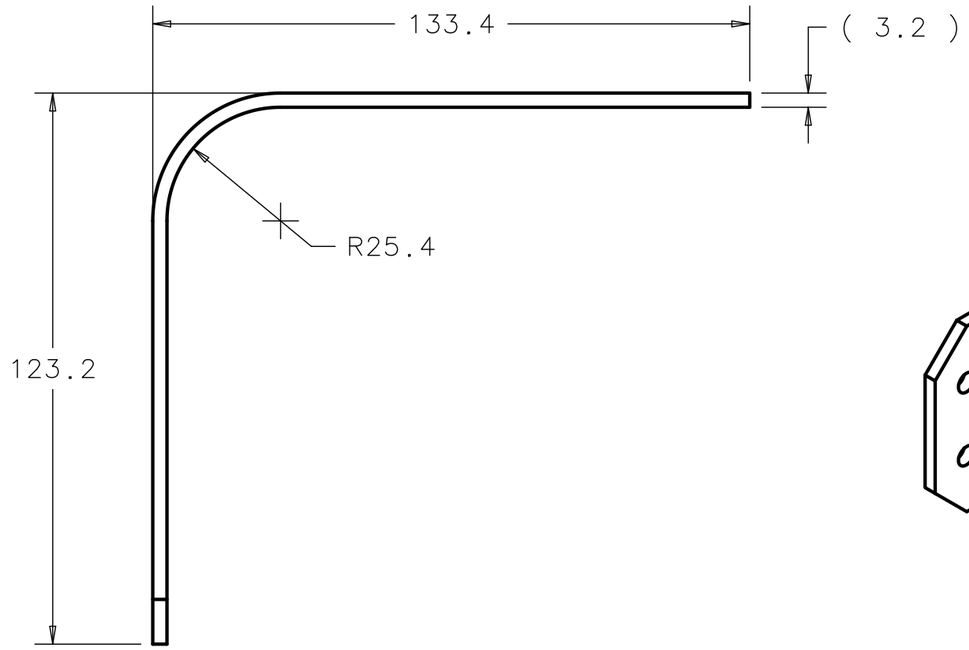

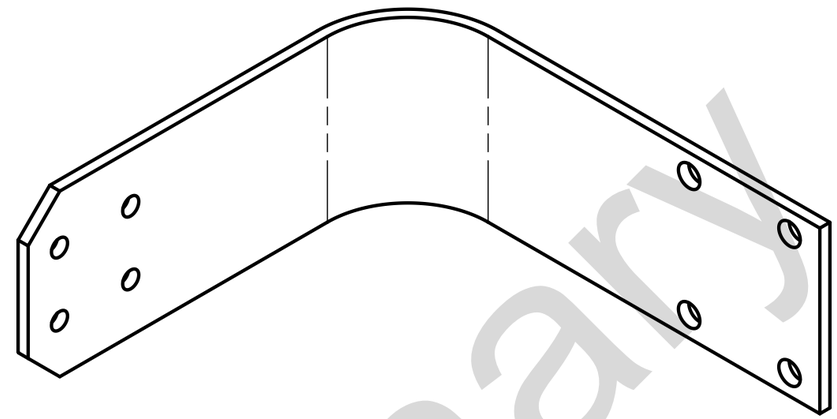

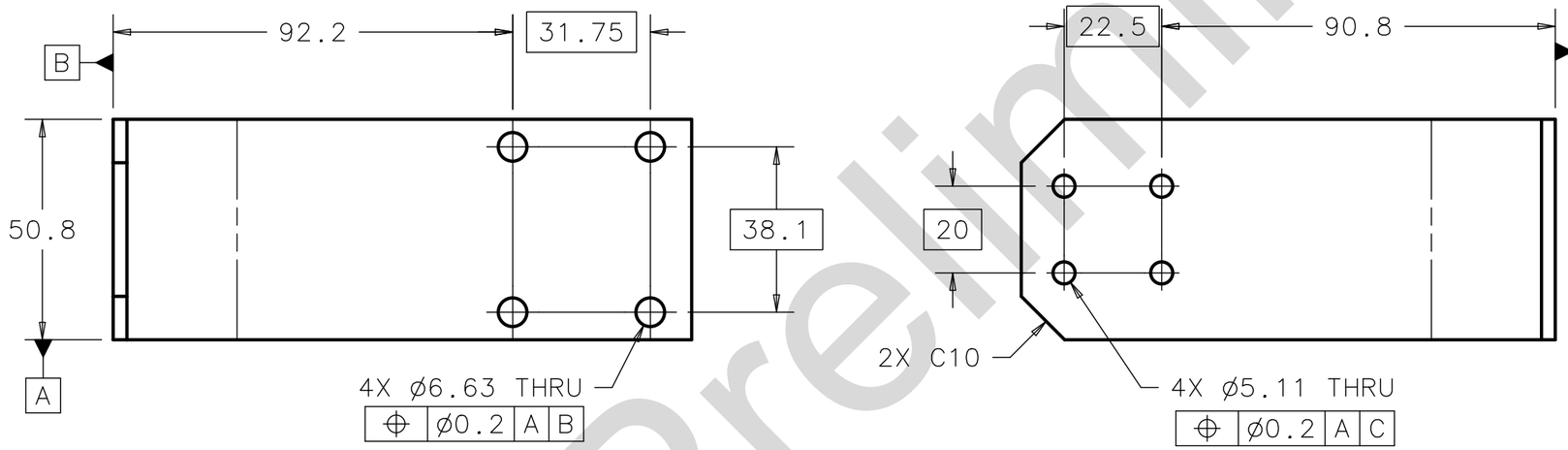

Preliminary

NOTES (UNLESS OTHERWISE SPECIFIED):

1. PART MUST BE FREE OF DIRT, GREASE, OIL AND CHIPS.
2. PART TO BE FREE OF ALL SHARP EDGES, CORNERS, AND BURRS.

UNLESS OTHERWISE SPECIFIED			ORIGINATOR	Y.ORLOV	21-AUG-2012
.X	.XX	ANGLES	DRAWN	V.MARTINEZ	21-AUG-2012
±	±	±	CHECKED		
1. BREAK ALL SHARP EDGES 0.5 MAX. 2. DO NOT SCALE DRAWING. 3. DIMENSIONS BASED UPON ASME Y14.5M-1994 4. MAX. ALL MACH. SURFACES N8 5. DRAWING UNITS: MM			APPROVED		
			USED ON		
			MATERIAL	OFHC COPPER	

FERMI NATIONAL ACCELERATOR LABORATORY
UNITED STATES DEPARTMENT OF ENERGY

ASTA - CAPTURE CAVITY 1 COLDMASS - CC1 ASSEMBLY COPPER BAR 5K

SCALE	DRAWING NUMBER	SHEET	REV
3:4	3886.801-MB-	1 OF 1	

CREATED WITH : Ideas12NXSeries | GROUP: TD/DDCIS-DESIGN-COMPUTING

Created: 09:28:51 on 29-08-12 (D-M-Y) By: victormm State: 1-INITIAL

REV	DESCRIPTION	DRAWN	DATE
		APPROVED	DATE
	ER# 10504 NEW RELEASE		

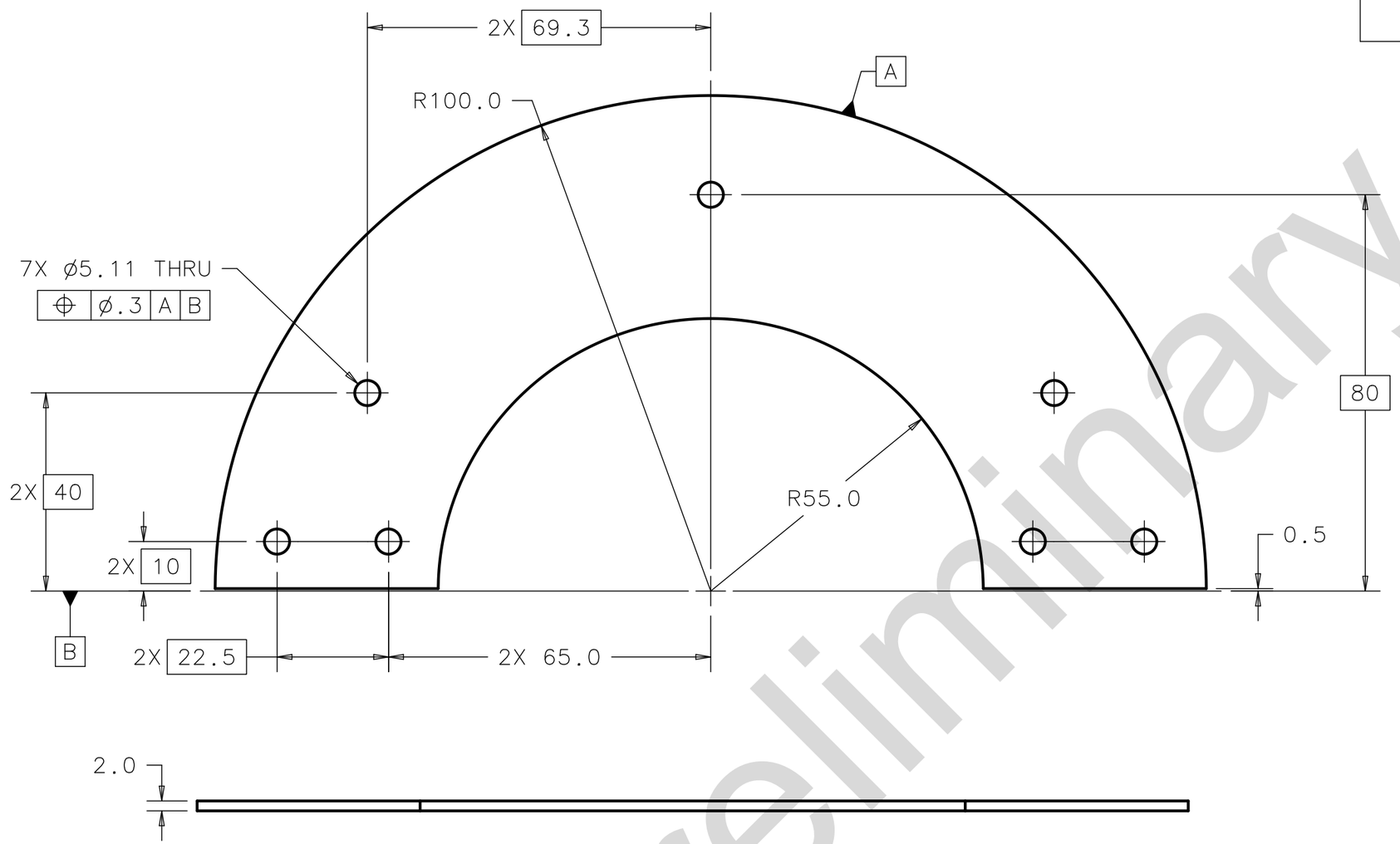

Preliminary

NOTES (UNLESS OTHERWISE SPECIFIED):

1. PART MUST BE FREE OF DIRT, GREASE, OIL AND CHIPS.
2. PART TO BE FREE OF ALL SHARP EDGES, CORNERS, AND BURRS.

UNLESS OTHERWISE SPECIFIED			ORIGINATOR	Y.ORLOV	21-AUG-2012
			DRAWN	V.MARTINEZ	21-AUG-2012
±	±	±	CHECKED		
1. BREAK ALL SHARP EDGES MAX. 2. DO NOT SCALE DRAWING. 3. DIMENSIONS BASED UPON			APPROVED		
4. MAX. ALL MACH. SURFACES √			USED ON		
5. DRAWING UNITS:			MATERIAL	ALUMINUM 6061-T6	

FERMI NATIONAL ACCELERATOR LABORATORY
UNITED STATES DEPARTMENT OF ENERGY

ASTA - CAPTURE CAVITY 1 COLDMASS - CC1 ASSEMBLY ENDCAP 5K SHIELD

SCALE	DRAWING NUMBER	SHEET	REV
1:1	3886.801-MB-	1 OF 1	

CREATED WITH : Ideas12NXSeries | GROUP: TD/DDCIS-DESIGN-COMPUTING

Created: 09:28:11 on 29-08-12 (D-M-Y) By: victormm State: 1-INITIAL

REV	DESCRIPTION	DRAWN	DATE
		APPROVED	DATE
	ER# 10504 NEW RELEASE		

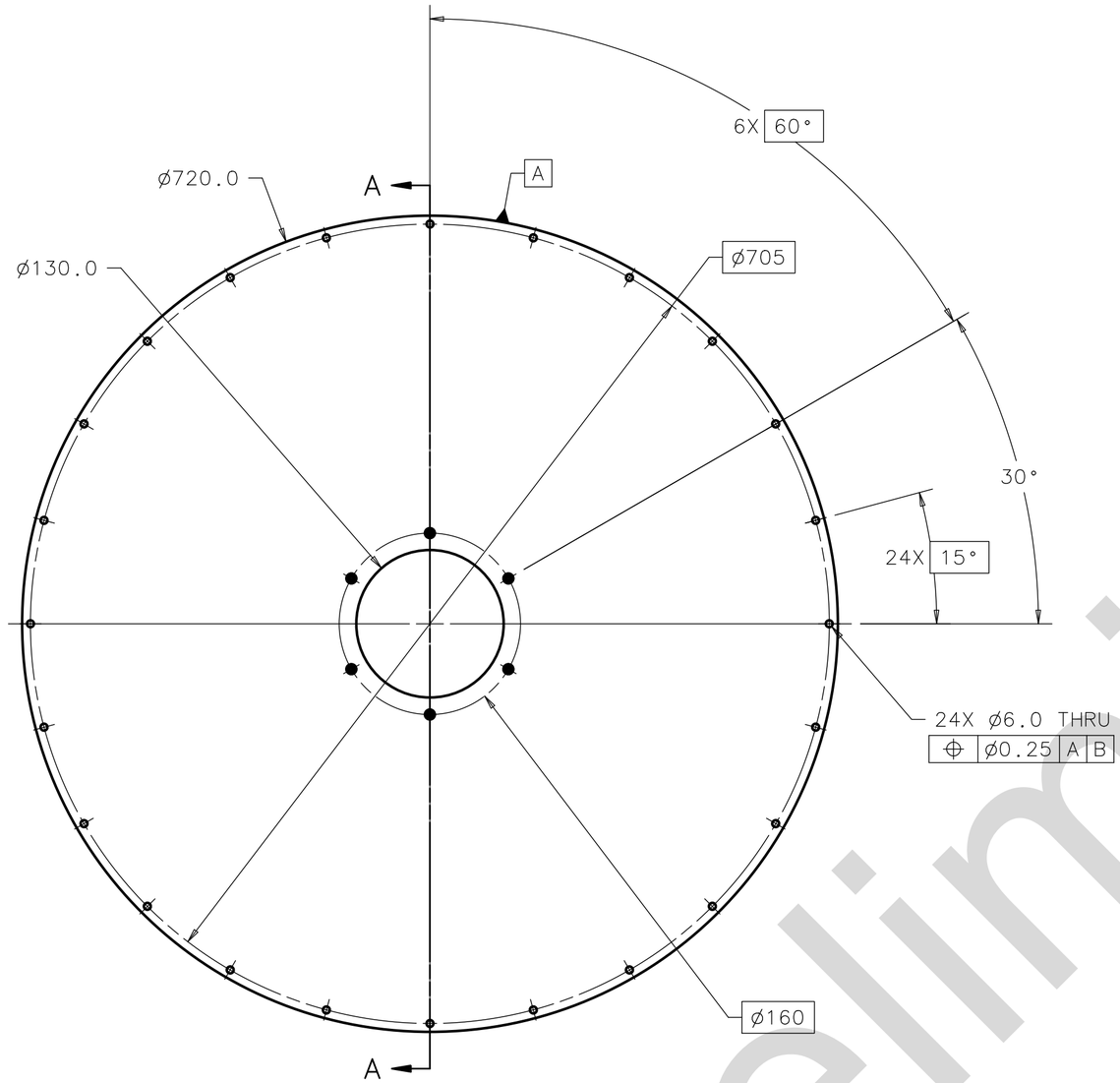

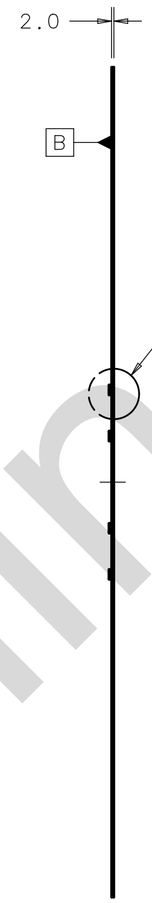

SECTION A-A

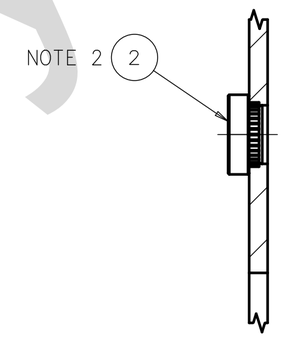

DETAIL B
SCALE 2/1

Preliminary

NOTES (UNLESS OTHERWISE SPECIFIED):

1. PART MUST BE FREE OF DIRT, GREASE, OIL AND CHIPS.
2. PEMNUT HOLE SIZE TO BE DETERMINED BY VENDORS CHOICE.
   PEM NUT THREAD SIZE SHALL BE MAINTAINED PER ITEM CALLOUT.

ITEM	PART NO.	DESCRIPTION OR SIZE	QTY.
2	COM'L	PENN ENGINEERING, PEM#CLSS-032-2	6
1	COM'L	18-8 STAINLESS STEEL	1

PARTS LIST

UNLESS OTHERWISE SPECIFIED			ORIGINATOR	Y.ORLOV	23-AUG-2012
.X	.XX	ANGLES	DRAWN	V.MARTINEZ	23-AUG-2012
± 0.5	± 0.15	± 1°	CHECKED		
			APPROVED		

1. BREAK ALL SHARP EDGES .5 MAX.
2. DO NOT SCALE DRAWING.
3. DIMENSIONS BASED UPON ASME Y14.5M-1994
4. MAX. ALL MACH. SURFACES 3.2
5. DRAWING UNITS: MM

USED ON

MATERIAL
SEE PARTS LIST

FERMI NATIONAL ACCELERATOR LABORATORY
UNITED STATES DEPARTMENT OF ENERGY

ASTA - CAPTURE CAVITY 1 COLDMASS - CC1 ASSEMBLY ENDCAP SHIELD ASSY

SCALE	DRAWING NUMBER	SHEET	REV
1:4 AS NOTED	3886.801-MC-	1 OF 1	

CREATED WITH : Ideas12NXSeries GROUP: TD/DDCIS-DESIGN-COMPUTING

REV	DESCRIPTION	DRAWN	DATE
		APPROVED	DATE

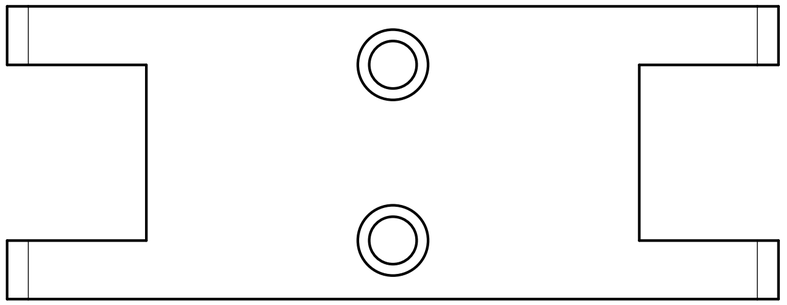

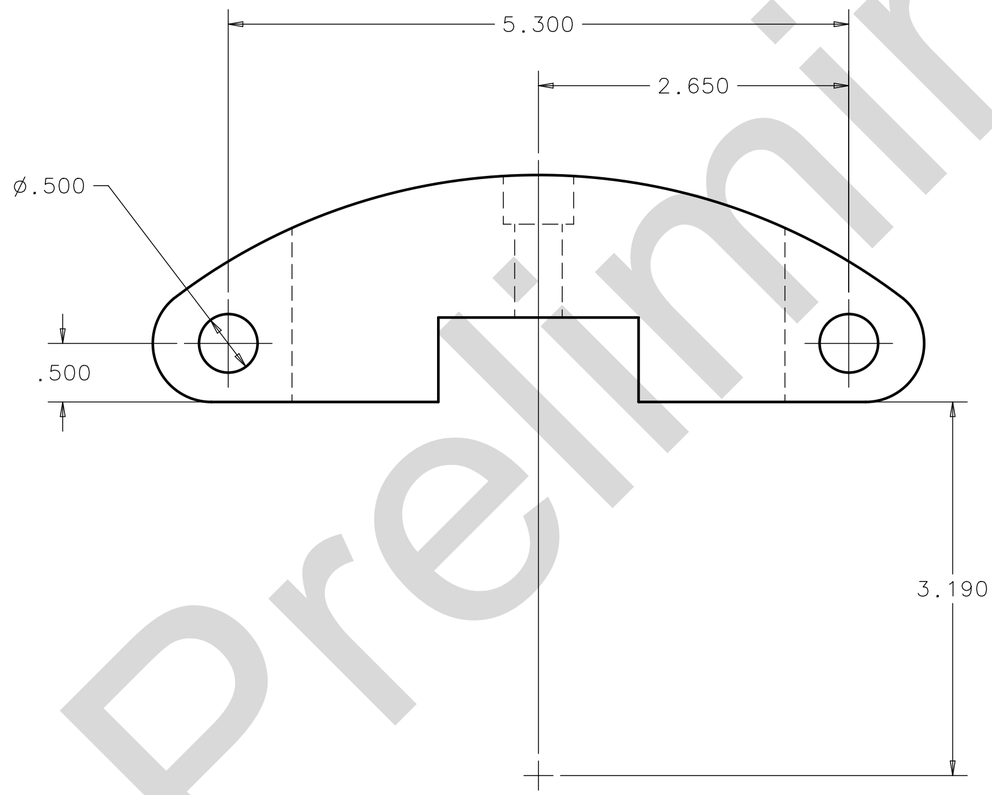

Preliminary

NOTES (UNLESS OTHERWISE SPECIFIED):

1. PART MUST BE FREE OF DIRT, GREASE, OIL AND CHIPS.
2. PART TO BE FREE OF ALL SHARP EDGES, CORNERS, AND BURRS.
3. SIX DIGIT PART NUMBER SHALL BE ENGRAVED, ETCHED, PERMANENT INK OR STEEL STAMPED IN THIS LOCATION WITH 1/8" HIGH CHARACTERS.

UNLESS OTHERWISE SPECIFIED			ORIGINATOR		
			DRAWN		
±	±	±	CHECKED		
1. BREAK ALL SHARP EDGES MAX.			APPROVED		
2. DO NOT SCALE DRAWING. 3. DIMENSIONS BASED UPON			USED ON		
4. MAX. ALL MACH. SURFACES √			MATERIAL		
5. DRAWING UNITS:					

FERMI NATIONAL ACCELERATOR LABORATORY
UNITED STATES DEPARTMENT OF ENERGY

SCALE	DRAWING NUMBER	SHEET	REV
	. — —	1 OF 1	

CREATED WITH : GROUP:

Created: 11:03:16 on 09-05-12 (D-M-Y) By: victormm State: 1-INITIAL

REV	DESCRIPTION	DRAWN	DATE
		APPROVED	DATE
–	ER #10504 NEW RELEASE		

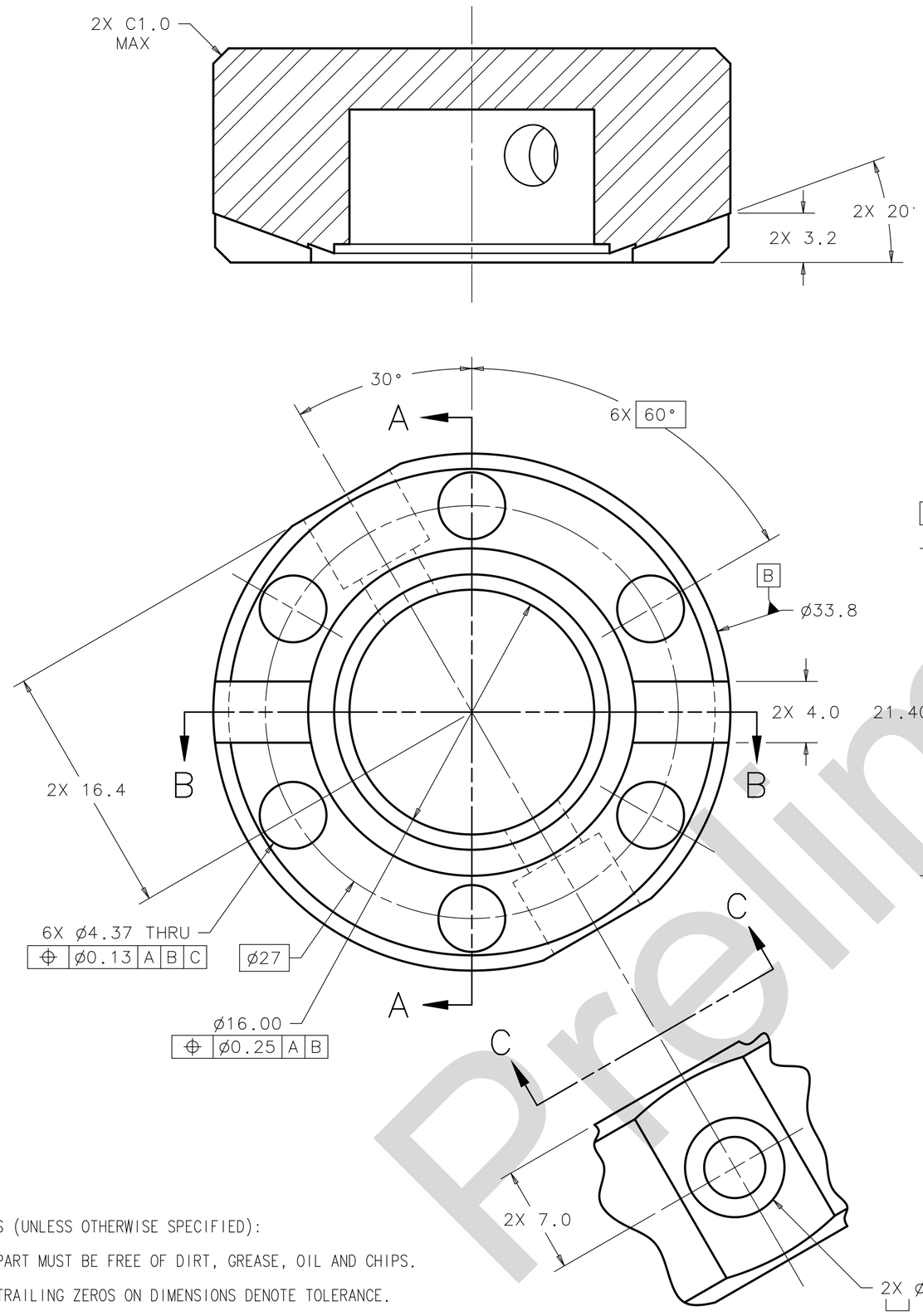

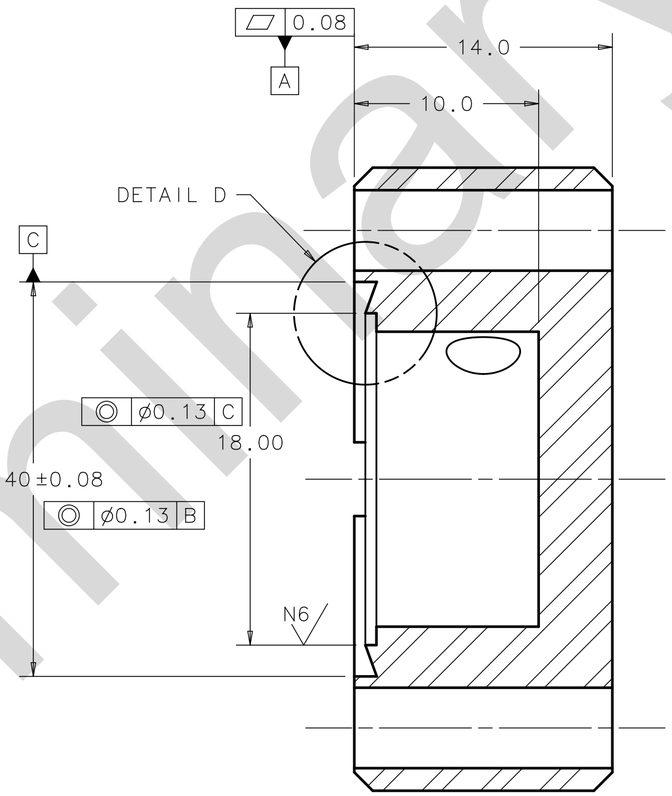

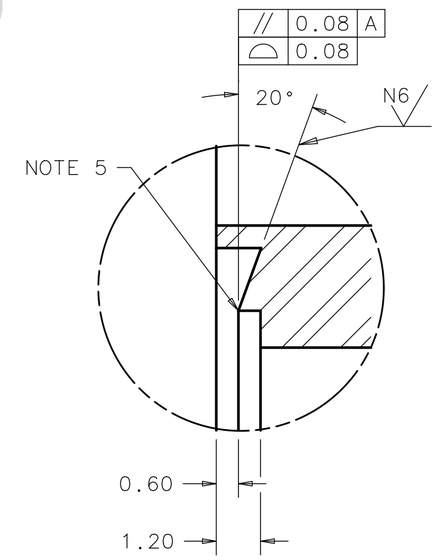

DETAIL D
SCALE 8:1

NOTES (UNLESS OTHERWISE SPECIFIED):

1. PART MUST BE FREE OF DIRT, GREASE, OIL AND CHIPS.
3. TRAILING ZEROS ON DIMENSIONS DENOTE TOLERANCE.
4. SEALING SURFACES MUST BE FREE OF SCRATCHES AND NICKS WITH NO RADIAL SCORING.
5. DO NOT BREAK SHARP KNIFE EDGE (DETAIL D)
6. PROTECT ALL SHARP EDGES TO ALLOW FOR SAFE HANDLING. PROMINANTLY MARK SHIPPING PACKAGE TO STATE: "CAUTION! THE CONTENTS OF THIS PACKAGE CONTAIN SHARP EDGES."

UNLESS OTHERWISE SPECIFIED			ORIGINATOR	Y.ORLOV	21-AUG-2012
0.X	0.XX	ANGLE	DRAWN	M.BATTISTA	22-AUG-2012
± 0.3	± 0.13	± 1°	CHECKED		
1. BREAK ALL SHARP EDGES 0.5 MAX. 2. DO NOT SCALE DRAWING. 3. DIMENSIONS BASED UPON ASME Y14.5M-1994 4. MAX. ALL MACH. SURFACES N8 5. DRAWING UNITS: MM			APPROVED		
			USED ON		
			MATERIAL	316L STAINLESS STEEL	

FERMI NATIONAL ACCELERATOR LABORATORY
UNITED STATES DEPARTMENT OF ENERGY

ASTA – CAPTURE CAVITY 1 TUBE WARMUP COOL-DOWN ASSEMBLY FLANGE 2K CAP WARMUP

SCALE	DRAWING NUMBER	SHEET	REV
4:1 & AS NOTED	3886.801-MC-	1 OF 1	

CREATED WITH : Ideas12NXSeries | GROUP: TD/DDCIS-DESIGN-COMPUTING

Preliminary

REV	DESCRIPTION	DRAWN	DATE
		APPROVED	DATE
	NEW RELEASE ER #10504		

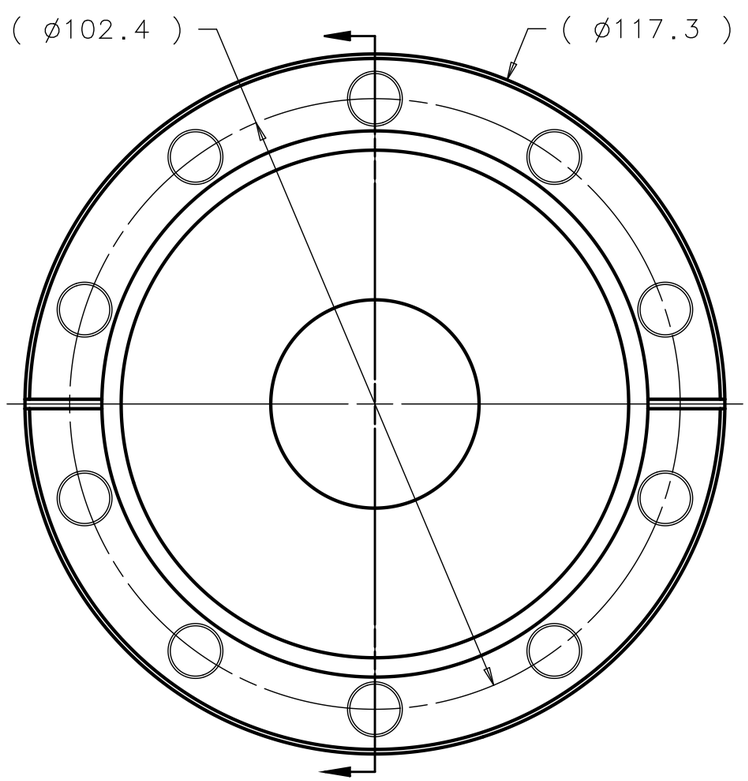

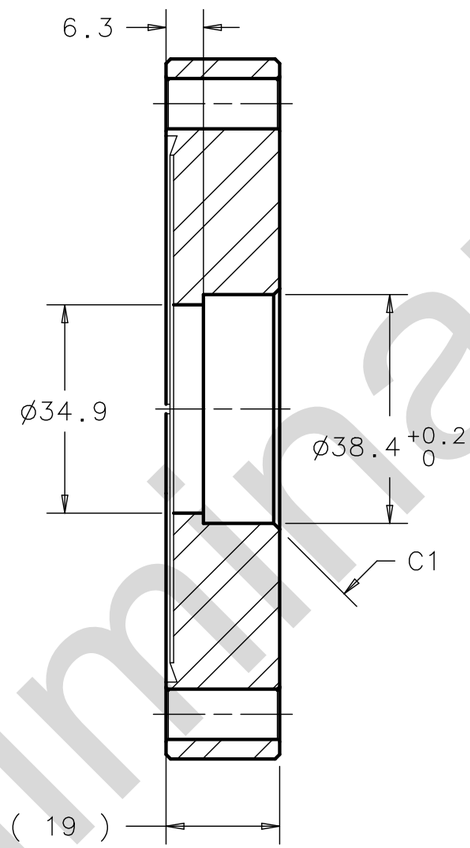

FOR REFERENCE ONLY
DO NOT USE FOR PRODUCTION

Preliminary

NOTES (UNLESS OTHERWISE SPECIFIED):

1. MAKE FROM 4-5/8" BLANK CONFLAT NON-ROTATABLE FLANGE W/CLEARANCE HOLES. MDC #110022 OR EQ.
2. PART MUST BE FREE OF DIRT, GREASE, OIL AND CHIPS.
3. PART MUST BE FREE OF ALL SHARP EDGES, CORNERS, AND BURRS.
4. SEALING SURFACES MUST BE FREE OF SCRATCHES AND NICKS WITH NO RADIAL SCORING.
5. VENDOR SHALL SUPPLY THE PART SUFFICIENTLY PACKAGED TO PROTECT THE FINISH AND INTEGRITY DURING SHIPMENT AND STORAGE. THE PACKAGE SHALL BE PROMINENTLY MARKED WITH THE PART NUMBER AND REVISION LEVEL.

UNLESS OTHERWISE SPECIFIED			ORIGINATOR	Y.ORLOV	22-AUG-2012
X	0.X	ANGLES	DRAWN	D.ARNOLD	29-AUG-2012
± 0.5	± 0.2	± 1°	CHECKED		
1. BREAK ALL SHARP EDGES 0.5 MAX. 2. DO NOT SCALE DRAWING. 3. DIMENSIONS BASED UPON ASME Y14.5M-1994 4. MAX. ALL MACH. SURFACES 3.2 5. DRAWING UNITS: MM			APPROVED		
			USED ON		
			MATERIAL	304 STAINLESS STEEL NOTE 1	

FERMI NATIONAL ACCELERATOR LABORATORY
UNITED STATES DEPARTMENT OF ENERGY

ASTA - CAPTURE CAVITY 1
HE VESSEL INDICATOR ASSEMBLY
4-5/8" OD X 1.50" ID CF FLANGE

SCALE	DRAWING NUMBER	SHEET	REV
1:1	3886.801-MB-	1 OF 1	

CREATED WITH : Ideas12NXSeries | GROUP: TD/DDCIS-DESIGN-COMPUTING

Created: 06:37:23 on 30-08-12 (D-M-Y) By: arnold State: 1-INITIAL

REV	DESCRIPTION	DRAWN	DATE
		APPROVED	DATE
	NEW RELEASE ER #10504		

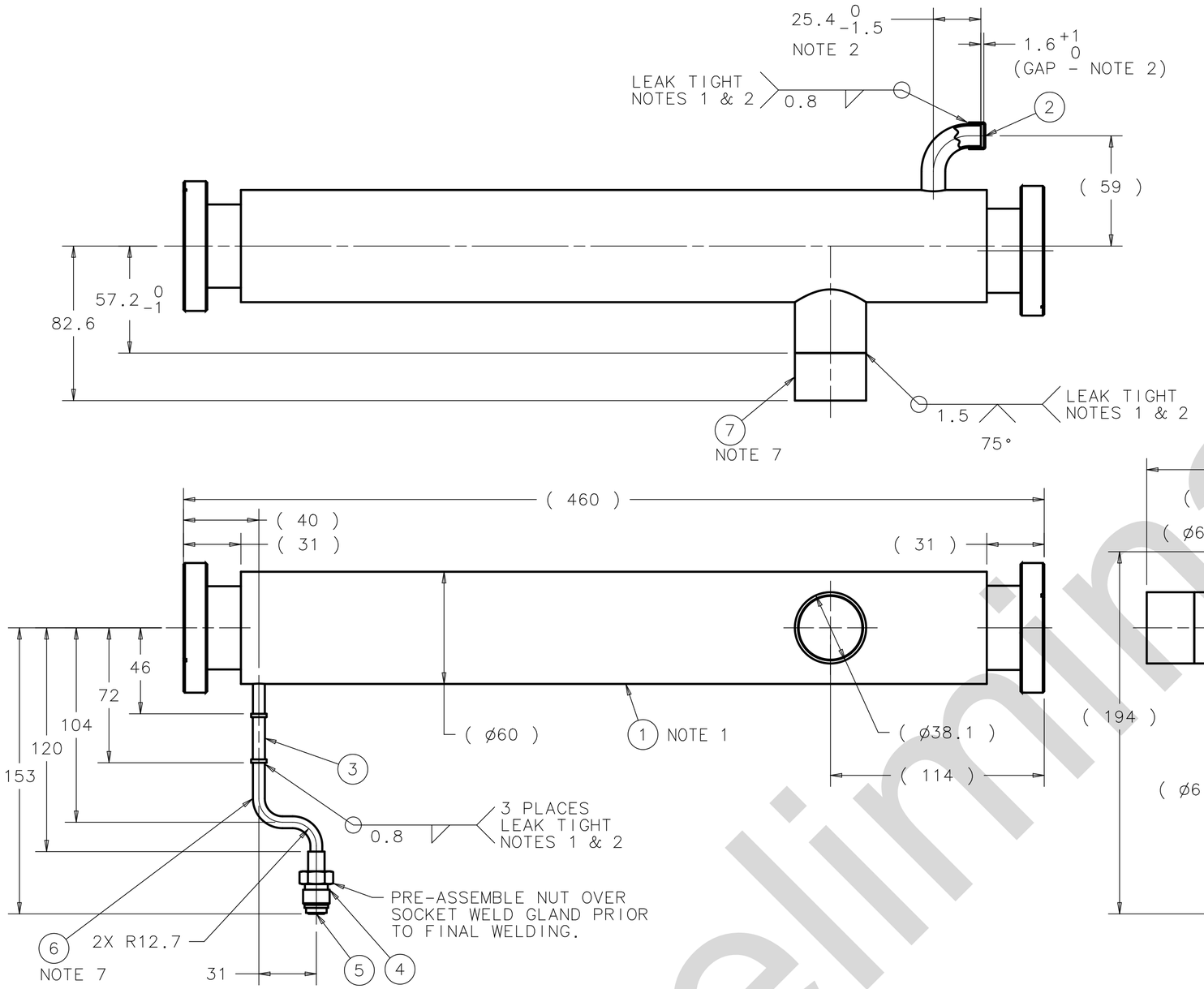

FOR REFERENCE ONLY
DO NOT USE FOR PRODUCTION

Preliminary

ITEM	PART NO.	DESCRIPTION OR SIZE	QTY.
7	COML	TUBE, 1-1/2" OD X .065"W, 304 SS	A/R
6	COML	TUBE, 1/4" OD X .035"W, 304 SS	A/R
5	COML	HYLOK SOCKET GLAND, SS, H-ZGS-4S	1
4	COML	HYLOK MALE NUT, SS, H-ZMN-4	1
3	COML	HYLOK UNION, SS, H-MU-4A	1
2	COML	TRULY TUBE CAP, SS, 10F-8 OR EQ.	1
1	COML	HE VESSEL INDICATOR	1

PARTS LIST

NOTES (UNLESS OTHERWISE SPECIFIED):

1. MODIFY PORTS OF EXISTING INDICATOR ASSEMBLY (ITEM 1) TO THE SIZES AND DIMENSIONS SHOWN.
2. ALL NEW WELDS TO BE VACUUM LEAK TIGHT. LEAK TEST: NO LEAK SHALL BE DETECTABLE ON THE MOST SENSITIVE SCALE OF A HELIUM LEAK DETECTOR WITH A MINIMUM SENSITIVITY OF 10^{-9} ATM. CC/SEC.
3. FINAL WELDMENT MUST BE FREE OF DIRT, GREASE, OIL AND CHIPS.
4. FINAL WELDMENT MUST BE FREE OF ALL SHARP EDGES, CORNERS, AND BURRS.
5. SEALING SURFACES MUST BE FREE OF SCRATCHES AND NICKS WITH NO RADIAL SCORING.
6. VENDOR SHALL SUPPLY THE PART SUFFICIENTLY PACKAGED TO PROTECT THE FINISH AND INTEGRITY DURING SHIPMENT AND STORAGE. THE PACKAGE SHALL BE PROMINENTLY MARKED WITH THE PART NUMBER AND REVISION LEVEL.
7. PARTS LIST SPECIFICATION AND DIMENSIONS ARE IN INCHES.

UNLESS OTHERWISE SPECIFIED			ORIGINATOR	Y.ORLOV	22-AUG-2012
X	0.X	ANGLES	DRAWN	D.ARNOLD	29-AUG-2012
± 0.5	± 0.2	± 1°	CHECKED		
1. BREAK ALL SHARP EDGES 0.5 MAX. 2. DO NOT SCALE DRAWING. 3. DIMENSIONS BASED UPON ASME Y15.5M-1994 4. MAX. ALL MACH. SURFACES 3.2 5. DRAWING UNITS: MM			APPROVED		
			USED ON		
			MATERIAL	SEE PARTS LIST	

FERMI NATIONAL ACCELERATOR LABORATORY
UNITED STATES DEPARTMENT OF ENERGY

ASTA - CAPTURE CAVITY 1
HE VESSEL INDICATOR ASSEMBLY
HE VESSEL INDICATOR - MODIFIED

SCALE	DRAWING NUMBER	SHEET	REV
1:2	3886.801-MC-	1 OF 1	

CREATED WITH : Ideas12NXSeries GROUP: TD/DDCIS-DESIGN-COMPUTING

REV	DESCRIPTION	DRAWN	DATE
		APPROVED	DATE
	NEW RELEASE ER #10504		

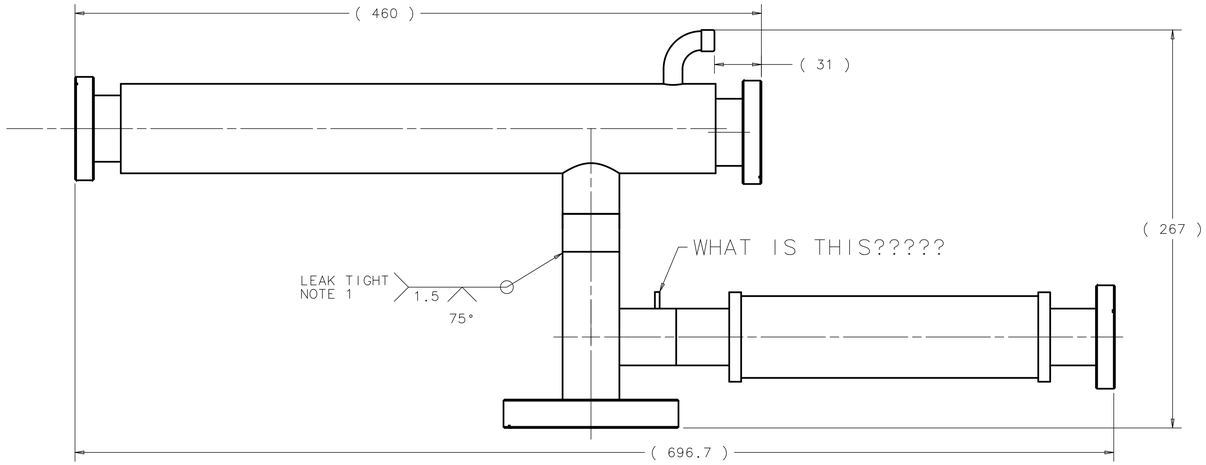

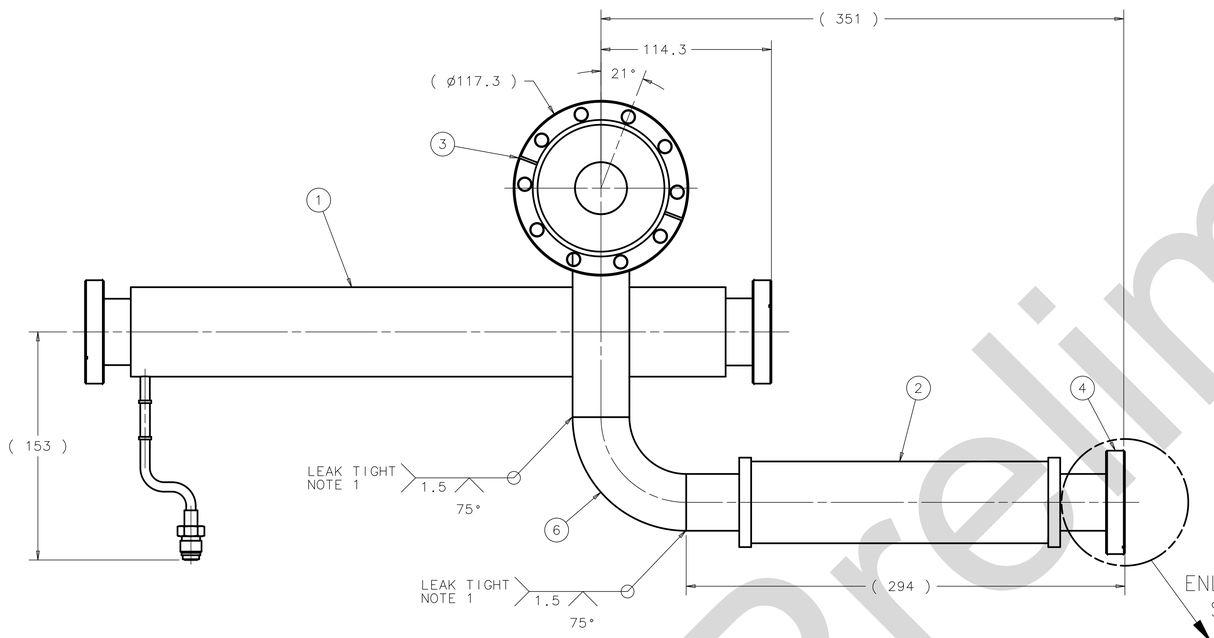

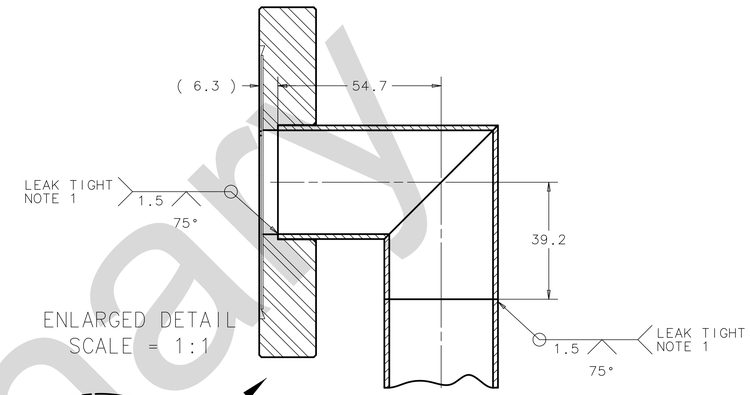

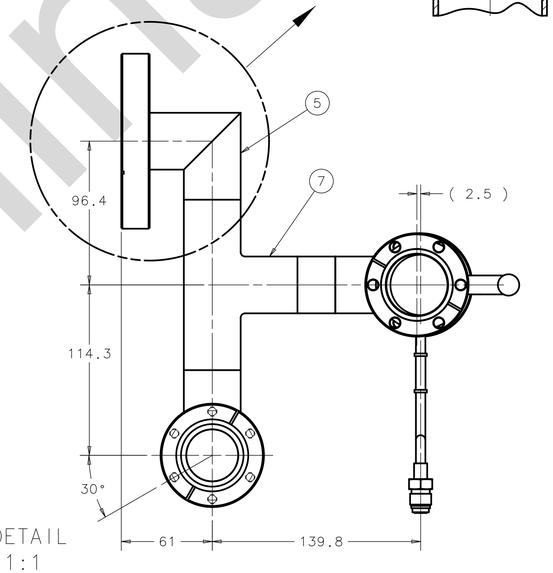

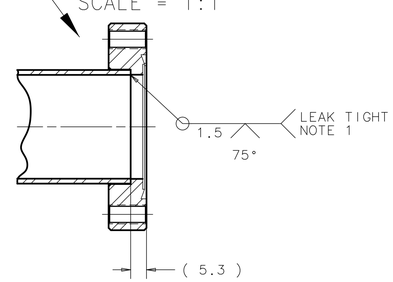

FOR REFERENCE ONLY
DO NOT USE FOR PRODUCTION

Preliminary

ITEM	PART NO.	DESCRIPTION OR SIZE	QTY.
7	COML	TEE, 1-1/2" OD X 2.25 LG. 304 S.S.; MDC #404502 OR EQ.	1
6	COML	90° ELBOW, 1-1/2" OD X 2.25" LG. 304 S.S.; MDC #403502 OR EQ.	1
5	COML	90° MITERED ELBOW, 1-1/2" OD X 2.25 LG.; 304 SS; MODIFY AS SHOWN	1
4	COML	CF NR THD. FLG, 2-3/4 OD X 1.5 ID 304 S.S.; MDC #130014 OR EQ.	1
3	MB-XXXXXX	4-5/8" OD X 1.50" ID CF FLANGE	1
2	MB-XXXXXX	HOSE MASTERFLEX 1.50 ID	1
1	MC-XXXXXX	HE VESSEL INDICATOR - MODIFIED	1

PARTS LIST

UNLESS OTHERWISE SPECIFIED			ORIGINATOR	Y.ORLOV	22-AUG-2012
X	0.X	ANGLES	DRAWN	D.ARNOLD	23-AUG-2012
± 0.5	± 0.2	± 1°	CHECKED		
			APPROVED		

1. BREAK ALL SHARP EDGES 0.5 MAX.
2. DO NOT SCALE DRAWING.
3. DIMENSIONS BASED UPON ASME Y14.5M-1994
4. MAX. ALL MACH. SURFACES 3.2
5. DRAWING UNITS: MM

USED ON

MATERIAL
SEE PARTS LIST

FERMI NATIONAL ACCELERATOR LABORATORY
UNITED STATES DEPARTMENT OF ENERGY

ASTA - CAPTURE CAVITY 1
HE VESSEL INDICATOR ASSEMBLY

SCALE	DRAWING NUMBER	SHEET	REV
1:2 & NOTED	3886.801-MD-	1 OF 1	

CREATED WITH : Ideas12NXSeries | GROUP: TD/DDCIS-DESIGN-COMPUTING

NOTES (UNLESS OTHERWISE SPECIFIED):

1. ALL NEW WELDS TO BE VACUUM LEAK TIGHT.
   LEAK TEST: NO LEAK SHALL BE DETECTABLE ON THE MOST SENSITIVE SCALE OF A HELIUM LEAK DETECTOR WITH A MINIMUM SENSITIVITY OF 10^{-9} ATM. CC/SEC.
3. FINAL WELDMENT MUST BE FREE OF DIRT, GREASE, OIL AND CHIPS.
4. FINAL WELDMENT MUST BE FREE OF ALL SHARP EDGES, CORNERS, AND BURRS.
5. SEALING SURFACES MUST BE FREE OF SCRATCHES AND NICKS WITH NO RADIAL SCORING.
6. VENDOR SHALL SUPPLY THE PART SUFFICIENTLY PACKAGED TO PROTECT THE FINISH AND INTEGRITY DURING SHIPMENT AND STORAGE. THE PACKAGE SHALL BE PROMINENTLY MARKED WITH THE PART NUMBER AND REVISION LEVEL.
7. PARTS LIST SPECIFICATIONS AND DIMENSIONS ARE IN INCHES.

REV	DESCRIPTION	DRAWN	DATE
		APPROVED	DATE
	NEW RELEASE ER #10504		

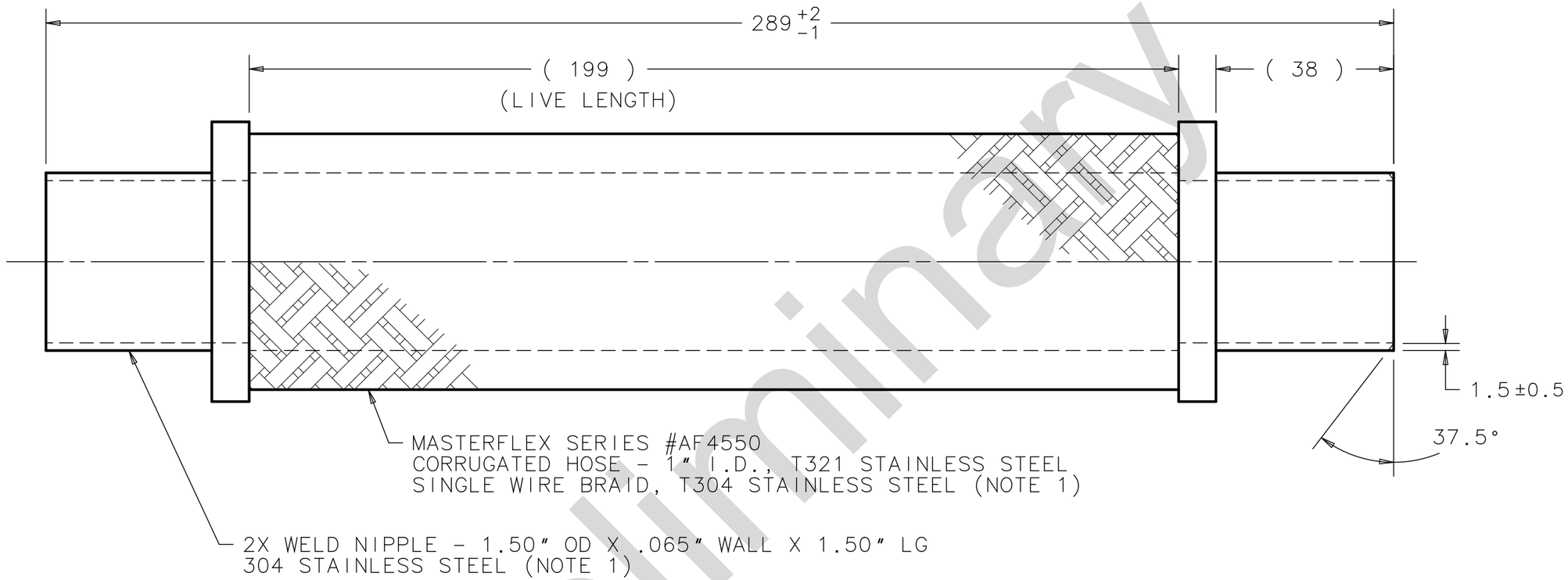

NOTES (UNLESS OTHERWISE SPECIFIED):

1. SPECIFICATION SIZES ARE IN INCHES.
2. ALL WELDS TO COMPLY WITH PRESSURE PIPING CODE ASME B31.3-2008
3. ALL WELDS TO BE VACUUM LEAK TIGHT.
   LEAK TEST: NO LEAK SHALL BE DETECTABLE ON THE MOST SENSITIVE SCALE OF A HELIUM LEAK DETECTOR WITH A MINIMUM SENSITIVITY OF 10^{-9} ATM. CC/SEC.
4. MAX.TEST PRESSURE AT 70°= XXX PSIG
5. PART MUST BE FREE OF DIRT, GREASE, OIL & CHIPS.
6. PART TO BE FREE OF ALL SHARP EDGES, CORNERS, AND BURRS.

Preliminary

FOR REFERENCE ONLY
DO NOT USE FOR PRODUCTION

UNLESS OTHERWISE SPECIFIED			ORIGINATOR	Y.ORLOV	22-AUG-2012
0.X	0.XX	ANGLES	DRAWN	D.ARNOLD	23-AUG-2012
± 1	± 0.05	± 1°	CHECKED		
1. BREAK ALL SHARP EDGES 0.5 MAX. 2. DO NOT SCALE DRAWING. 3. DIMENSIONS BASED UPON ASME Y14.5M-1994 4. MAX. ALL MACH. SURFACES 3.2 5. DRAWING UNITS: MM			APPROVED		
			USED ON		
			MATERIAL	AS NOTED	

FERMI NATIONAL ACCELERATOR LABORATORY
UNITED STATES DEPARTMENT OF ENERGY

ASTA - CAPTURE CAVITY 1
HE VESSEL INDICATOR WELDMENT
HOSE MASTERFLEX 1.50 ID

SCALE	DRAWING NUMBER	SHEET	REV
1:1	3886.801-MB-	1 OF 1	

CREATED WITH : Ideas12NXSeries | GROUP: TD/DDCIS-DESIGN-COMPUTING

Created: 06:36:10 on 30-08-12 (D-M-Y) By: arnold State: 1-INITIAL

REV	DESCRIPTION	DRAWN / APPROVED	DATE / DATE
-	ER #10504 NEW RELEASE		

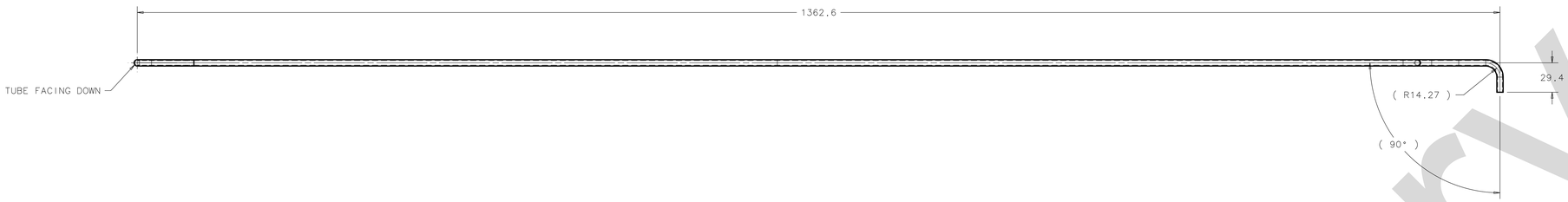

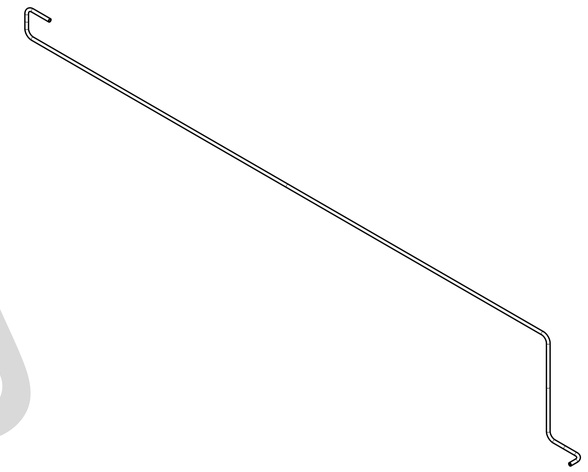

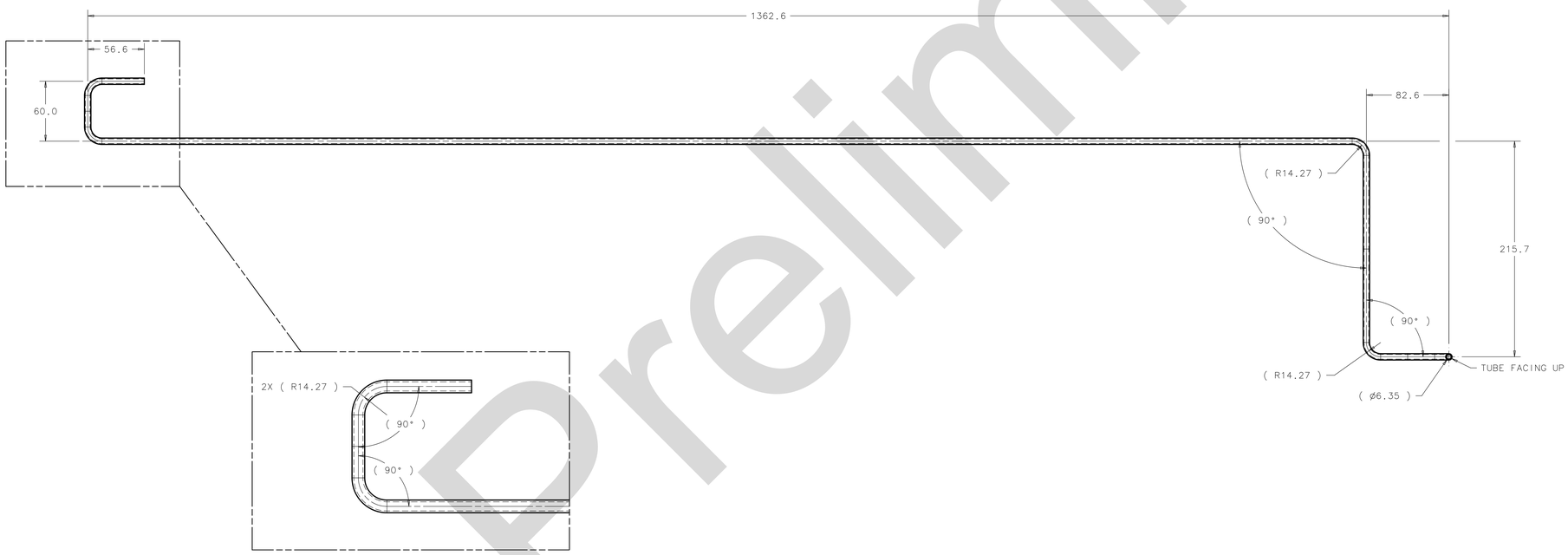

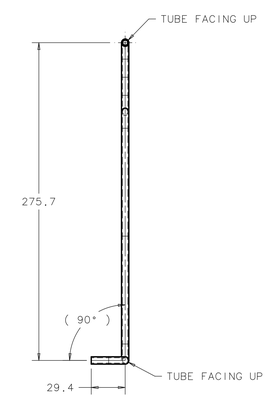

SCALE 1:1

NOTES (UNLESS OTHERWISE SPECIFIED):

1. PART MUST BE FREE OF DIRT, GREASE, OIL AND CHIPS.
2. PART TO BE FREE OF ALL SHARP EDGES, CORNERS, AND BURRS.
3. ALL CENTER BEND RADIUS TO BE 14.27 [9/16"] UNLESS OTHERWISE SPECIFIED.
4. APPROXIMATE CENTERLINE LENGTH - 1693.7MM.
5. ALL WELDS TO BE VACUUM LEAK TIGHT. LEAK TEST: NO LEAK SHALL BE DETECTABLE ON THE MOST SENSITIVE SCALE OF A HELIUM LEAK DETECTOR WITH A MINIMUM SENSITIVITY OF 10^{-9} ATM. CC/SEC.
6. ALL WELDS TO COMPLY WITH PRESSURE PIPING CODE ASME B31.3-2008 OR LATER FOR NORMAL FLUID SERVICE. RELATED DOCUMENTATION OF MATERIALS, WELDING, AND IN-PROCESS INSPECTION MUST BE INCLUDED WITH FINAL PRODUCT DELIVERY.

UNLESS OTHERWISE SPECIFIED			ORIGINATOR	Y.ORLOV	22-AUG-2012
0.X	0.XX	ANGLE	DRAWN	J.COGHILL	22-AUG-2012
± 0.5	± 0.12	±0.5°	CHECKED		
1. BREAK ALL SHARP EDGES 0.5 MAX. 2. DO NOT SCALE DRAWING. 3. DIMENSIONS BASED UPON ASME Y14.5M-1994 4. MAX. ALL MACH. SURFACES 5. DRAWING UNITS: MM			APPROVED		
			USED ON		
			MATERIAL	STNLS STL 316L 1/4" TUBE STOCK	

FERMI NATIONAL ACCELERATOR LABORATORY
UNITED STATES DEPARTMENT OF ENERGY

ASTA - CAPTURE CAVITY 1
COLDMASS-CC1 ASSEMBLY
PIPE-2-PHASE 2K-LINE

SCALE	DRAWING NUMBER	SHEET	REV
1:2 & NOTED	3886.801-ME-	1 OF 1	

CREATED WITH : Ideas12NXSeries GROUP: TD/DDCIS-DESIGN-COMPUTING

Preliminary

REV	DESCRIPTION	DRAWN	DATE
		APPROVED	DATE
	ER# 10504 NEW RELEASE		

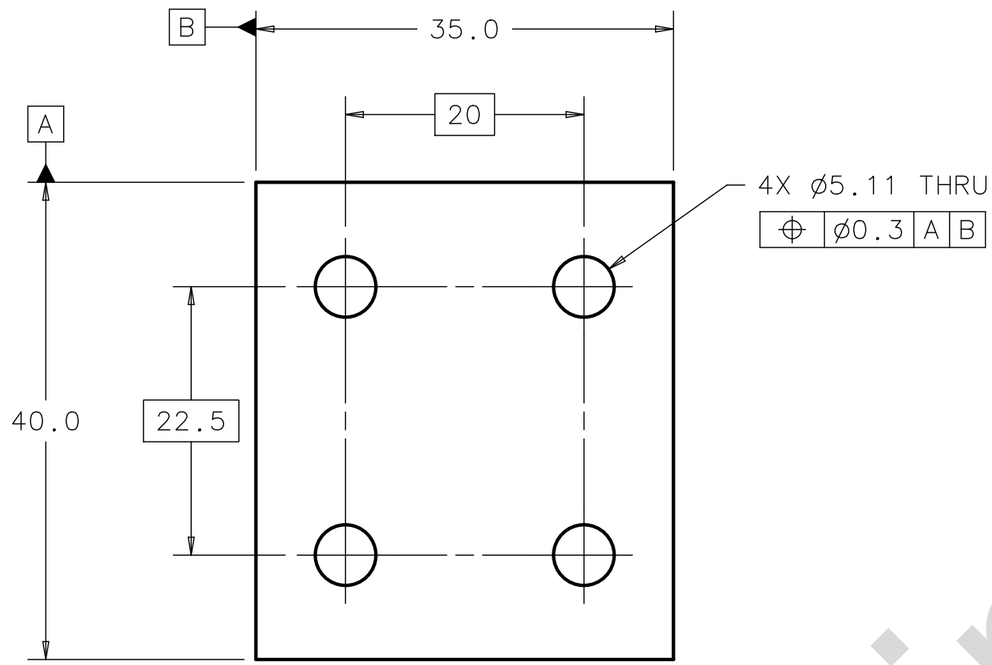

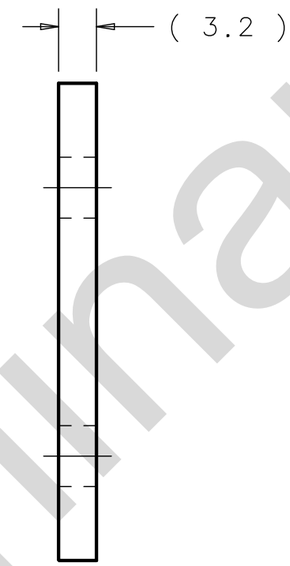

Preliminary

NOTES (UNLESS OTHERWISE SPECIFIED):

1. PART MUST BE FREE OF DIRT, GREASE, OIL AND CHIPS.
2. PART TO BE FREE OF ALL SHARP EDGES, CORNERS, AND BURRS.

UNLESS OTHERWISE SPECIFIED			ORIGINATOR	Y.ORLOV	21-AUG-2012
			DRAWN	V.MARTINEZ	21-AUG-2012
±	±	±	CHECKED		
1. BREAK ALL SHARP EDGES MAX. 2. DO NOT SCALE DRAWING. 3. DIMENSIONS BASED UPON			APPROVED		
4. MAX. ALL MACH. SURFACES √			USED ON		
5. DRAWING UNITS:			MATERIAL	OFHC COPPER	

FERMI NATIONAL ACCELERATOR LABORATORY
UNITED STATES DEPARTMENT OF ENERGY

ASTA - CAPTURE CAVITY 1
COLDMASS - CC1 ASSEMBLY
PLATE 5K SHIELD

SCALE	DRAWING NUMBER	SHEET	REV
2:1	3886.801-MB-	1 OF 1	

CREATED WITH : Ideas12NXSeries | GROUP: TD/DDCIS-DESIGN-COMPUTING

Created: 09:25:54 on 29-08-12 (D-M-Y) By: victormm State: 1-INITIAL

REV	DESCRIPTION	DRAWN	DATE
		APPROVED	DATE
–	ER #10504 NEW RELEASE		

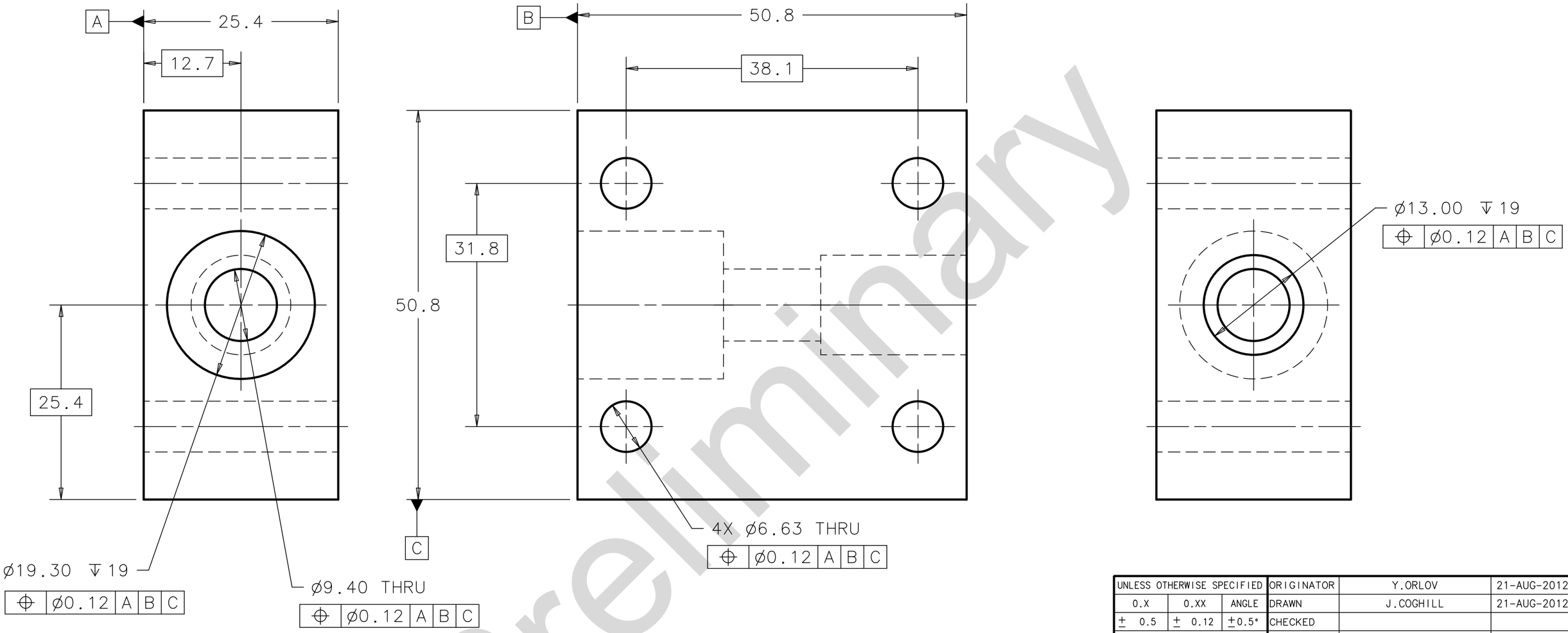

Preliminary

NOTES (UNLESS OTHERWISE SPECIFIED):

1. PART MUST BE FREE OF DIRT, GREASE, OIL AND CHIPS.
2. PART TO BE FREE OF ALL SHARP EDGES, CORNERS, AND BURRS.

UNLESS OTHERWISE SPECIFIED			ORIGINATOR	Y.ORLOV	21-AUG-2012
0.X	0.XX	ANGLE	DRAWN	J.COGHILL	21-AUG-2012
± 0.5	± 0.12	±0.5°	CHECKED		
			APPROVED		

1. BREAK ALL SHARP EDGES 0.5 MAX.
2. DO NOT SCALE DRAWING.
3. DIMENSIONS BASED UPON ASME Y14.5M-1994
4. MAX. ALL MACH. SURFACES N8
5. DRAWING UNITS: MM

USED ON

MATERIAL: STNLS STL 316L

FERMI NATIONAL ACCELERATOR LABORATORY
UNITED STATES DEPARTMENT OF ENERGY

ASTA – CAPTURE CAVITY 1 COLDMASS-CC1 ASSEMBLY PLATE REDUCER

SCALE	DRAWING NUMBER	SHEET	REV
2:1	3886.801-MB-	1 OF 1	

CREATED WITH : Ideas12NXSeries | GROUP: TD/DDCIS-DESIGN-COMPUTING

Created: 07:52:30 on 29-08-12 (D-M-Y) By: coghill State: 1-INITIAL

REV	DESCRIPTION	DRAWN	DATE
		APPROVED	DATE
-	ER #10504 NEW RELEASE		

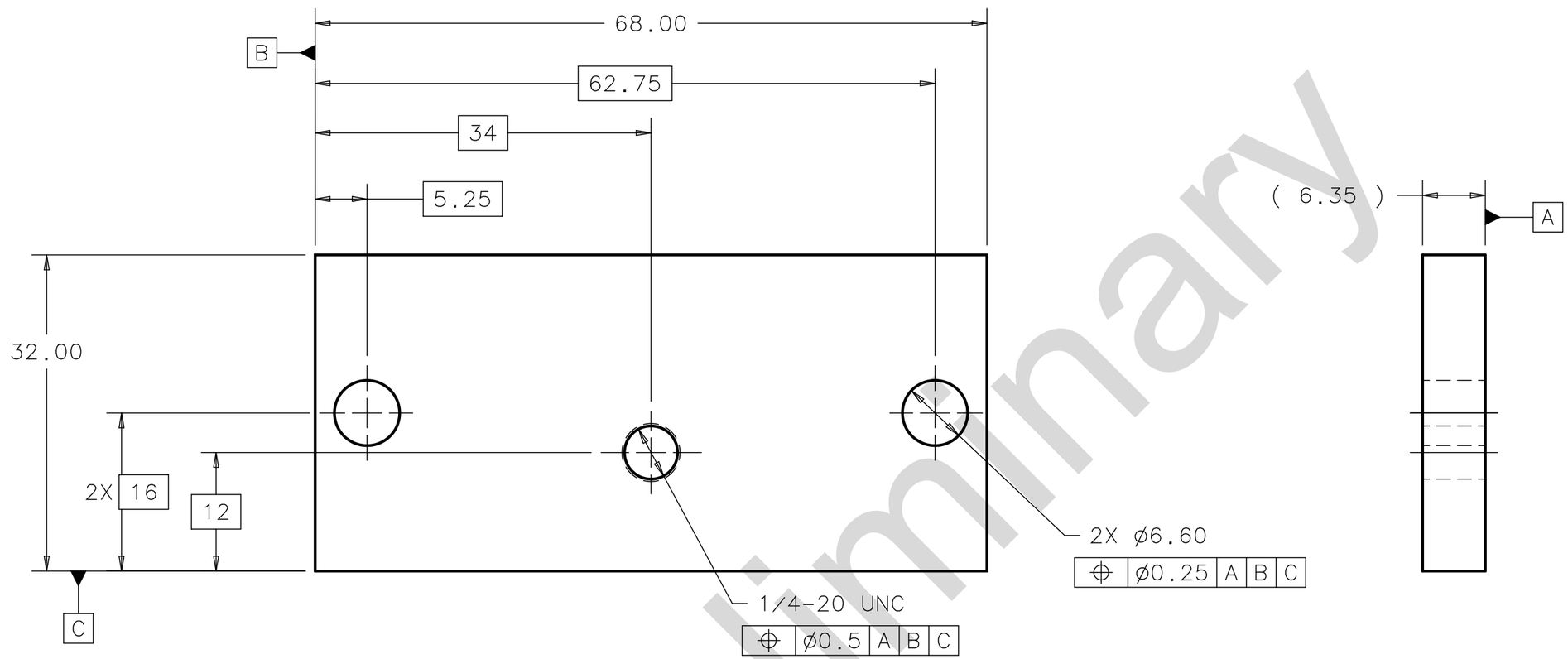

Preliminary

NOTES (UNLESS OTHERWISE SPECIFIED):

1. PART MUST BE FREE OF DIRT, GREASE, OIL AND CHIPS.
2. PART TO BE FREE OF ALL SHARP EDGES, CORNERS, AND BURRS.
3. TRAILING ZEROS ON DIMENSION DENOTES TOLERANCE.

UNLESS OTHERWISE SPECIFIED			ORIGINATOR	Y.ORLOV	31-AUG-2012
0.X	0.XX	ANGLE	DRAWN	J.COGHILL	31-AUG-2012
± - -	± 0.12	±0.5°	CHECKED		
			APPROVED		

1. BREAK ALL SHARP EDGES 0.5 MAX.
2. DO NOT SCALE DRAWING.
3. DIMENSIONS BASED UPON ASME Y14.5M-1994
4. MAX. ALL MACH. SURFACES N8
5. DRAWING UNITS: MM

USED ON

MATERIAL: 316 STAINLESS STEEL

FERMI NATIONAL ACCELERATOR LABORATORY
UNITED STATES DEPARTMENT OF ENERGY

ASTA - CAPTURE CAVITY 1 HOUSING NEEDLE BEARING KIT PLATE STOP CAVITY LAG

SCALE	DRAWING NUMBER	SHEET	REV
2:1	3886.801-MB-	1 OF 1	

CREATED WITH : Ideas12NXSeries | GROUP: TD/DDCIS-DESIGN-COMPUTING

Created: 12:19:59 on 04-09-12 (D-M-Y) By: mccono State: 1-INITIAL

REV	DESCRIPTION	DRAWN	DATE
		APPROVED	DATE
	ER# 10504 NEW RELEASE		

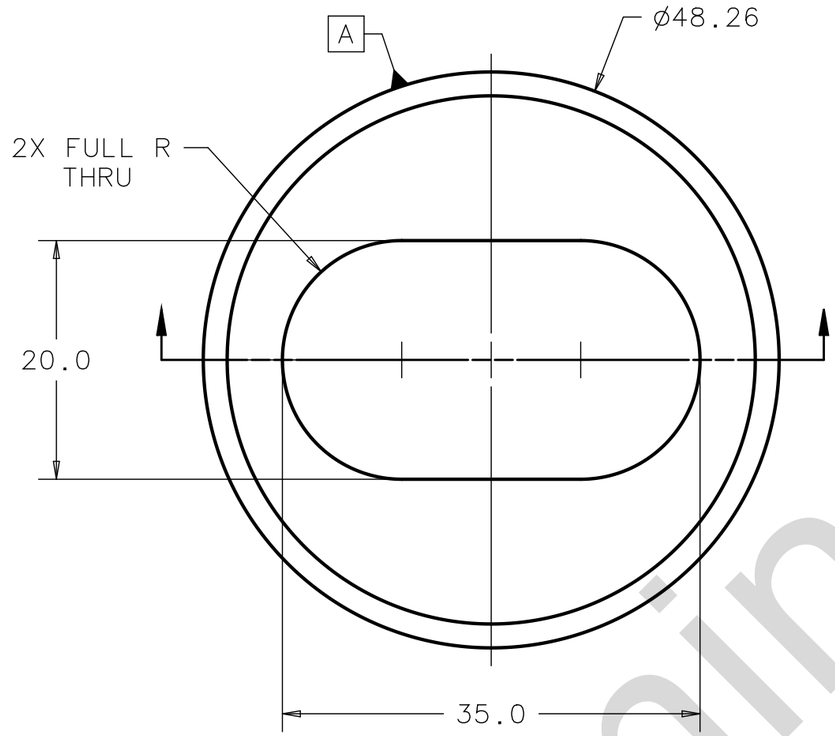

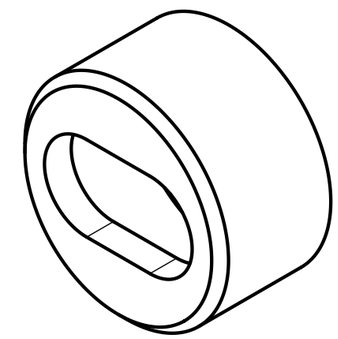

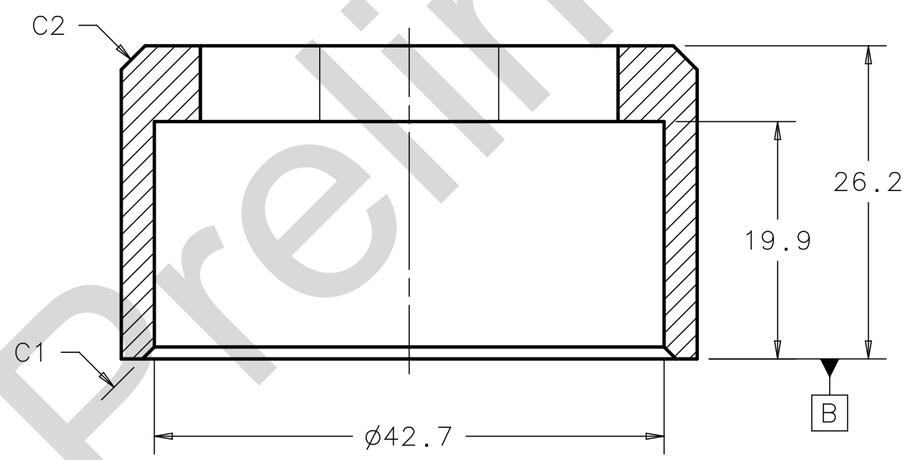

Preliminary

NOTES (UNLESS OTHERWISE SPECIFIED):

1. PART MUST BE FREE OF DIRT, GREASE, OIL AND CHIPS.
2. PART TO BE FREE OF ALL SHARP EDGES, CORNERS, AND BURRS.

UNLESS OTHERWISE SPECIFIED			ORIGINATOR	Y.ORLOV	21-AUG-2012
.X	.XX	ANGLES	DRAWN	V.MARTINEZ	21-AUG-2012
± 0.5	± --	± 1°	CHECKED		
1. BREAK ALL SHARP EDGES 0.3 MAX. 2. DO NOT SCALE DRAWING. 3. DIMENSIONS BASED UPON ASME Y14.5M-1994 4. MAX. ALL MACH. SURFACES N8 5. DRAWING UNITS: MM			APPROVED		
			USED ON		
			MATERIAL	ALUMINUM 6061-T6	

FERMI NATIONAL ACCELERATOR LABORATORY
UNITED STATES DEPARTMENT OF ENERGY

ASTA - CAPTURE CAVITY 1 COLDMASS - CC1 ASSEMBLY SLOT Z-STOP

SCALE	DRAWING NUMBER	SHEET	REV
2:1	3886.801-MB-	1 OF 1	

CREATED WITH : Ideas12NXSeries | GROUP: TD/DDCIS-DESIGN-COMPUTING

Created: 12:17:40 on 04-09-12 (D-M-Y) By: mccono State: 1-INITIAL

REV	DESCRIPTION	DRAWN	DATE
		APPROVED	DATE
-	ER #10504 NEW RELEASE		

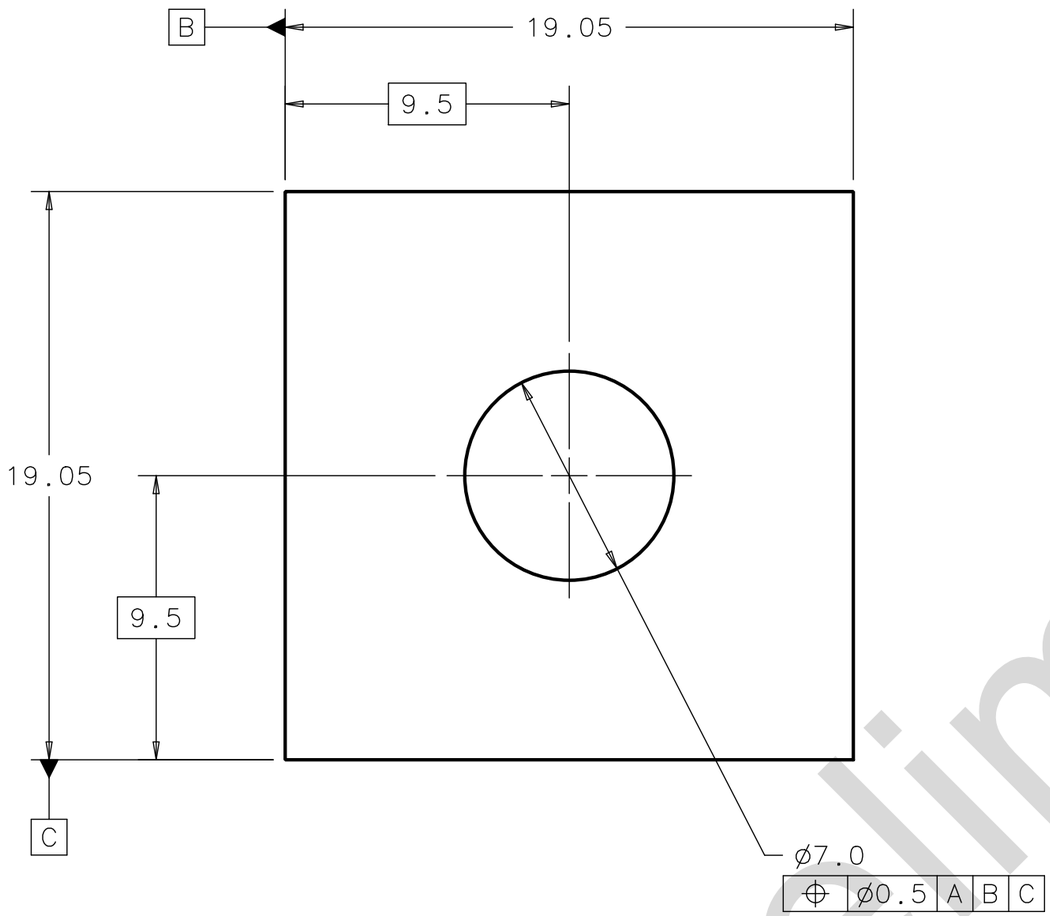

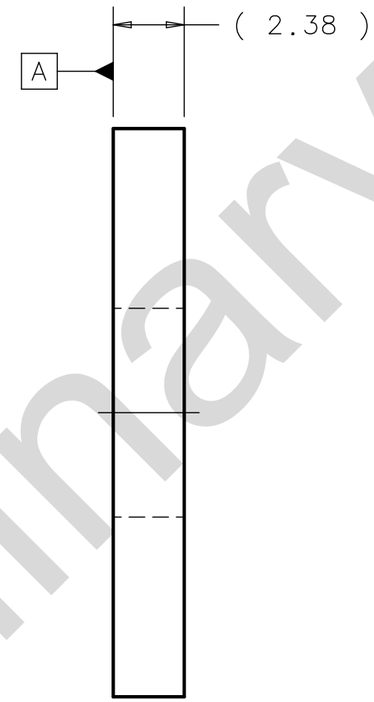

Preliminary

NOTES (UNLESS OTHERWISE SPECIFIED):

1. PART MUST BE FREE OF DIRT, GREASE, OIL AND CHIPS.
2. PART TO BE FREE OF ALL SHARP EDGES, CORNERS, AND BURRS.

UNLESS OTHERWISE SPECIFIED			ORIGINATOR	Y.ORLOV	29-AUG-2012
0.X	0.XX	ANGLE	DRAWN	J.COGHILL	29-AUG-2012
± 0.8	± 0.12	±0.5°	CHECKED		
1. BREAK ALL SHARP EDGES 0.5 MAX. 2. DO NOT SCALE DRAWING. 3. DIMENSIONS BASED UPON ASME Y14.5M-1994 4. MAX. ALL MACH. SURFACES N8 5. DRAWING UNITS: MM			APPROVED		
			USED ON		
			MATERIAL	COPPER ALLOY 110 .093" SHEET STOCK	

FERMI NATIONAL ACCELERATOR LABORATORY
UNITED STATES DEPARTMENT OF ENERGY

ASTA - CAPTURE CAVITY 1 COLDMASS-CC1 ASSEMBLY SUPPORT COPPER

SCALE	DRAWING NUMBER	SHEET	REV
5:1	3886.801-MB-	1 OF 1	

CREATED WITH : Ideas12NXSeries | GROUP: TD/DDCIS-DESIGN-COMPUTING

Created: 11:00:08 on 29-08-12 (D-M-Y) By: coghill State: 1-INITIAL

REV	DESCRIPTION	DRAWN	DATE
		APPROVED	DATE
-	ER #10504 NEW RELEASE		

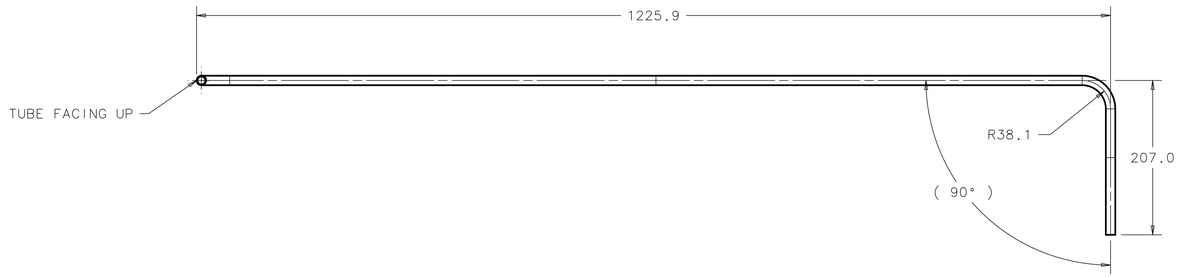

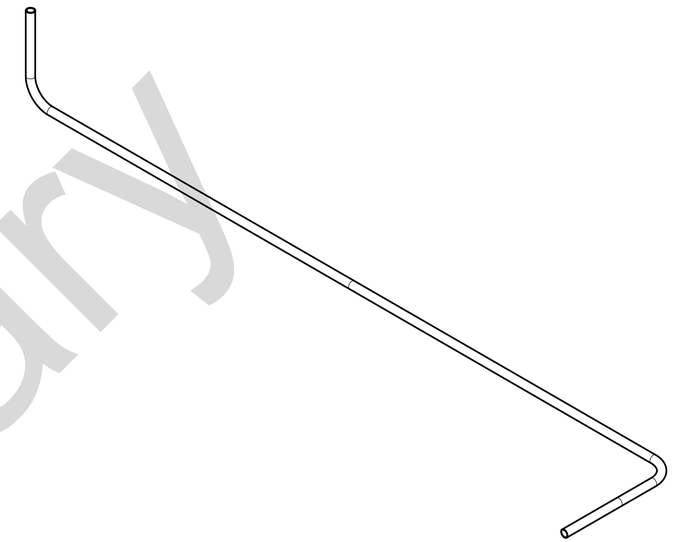

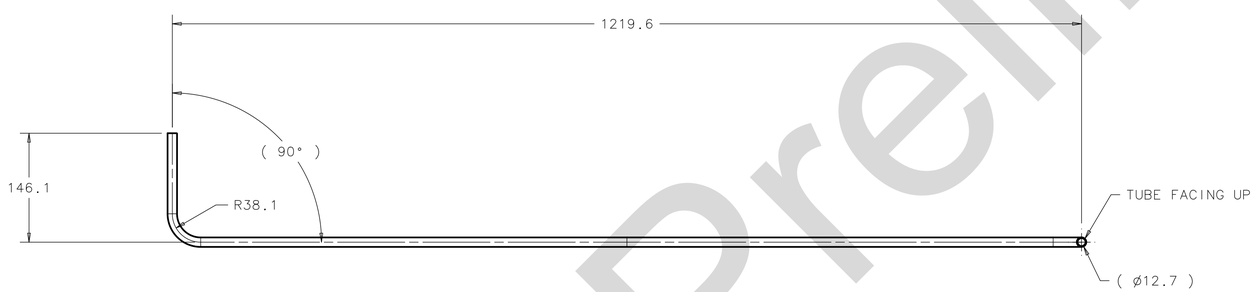

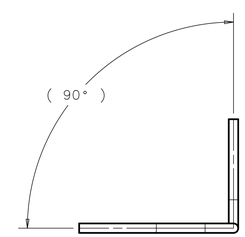

Preliminary

NOTES (UNLESS OTHERWISE SPECIFIED):

1. PART MUST BE FREE OF DIRT, GREASE, OIL AND CHIPS.
2. PART TO BE FREE OF ALL SHARP EDGES, CORNERS, AND BURRS.
3. ALL CENTER BEND RADIUS TO BE 38.1MM [1.5"] UNLESS OTHERWISE SPECIFIED.
4. TRAILING ZEROS ON DIMENSION DENOTES TOLERANCE.
5. APPROXIMATE CENTERLINE LENGTH - 1540.0MM
6. ALL WELDS TO BE VACUUM LEAK TIGHT.
   LEAK TEST: NO LEAK SHALL BE DETECTABLE ON THE MOST SENSITIVE SCALE OF A HELIUM LEAK DETECTOR WITH A MINIMUM SENSITIVITY OF 10^{-9} ATM. CC/SEC.
7. ALL WELDS TO COMPLY WITH PRESSURE PIPING CODE ASME B31.3-2008 OR LATER FOR NORMAL FLUID SERVICE, RELATED DOCUMENTATION OF MATERIALS, WELDING, AND IN-PROCESS INSPECTION MUST BE INCLUDED WITH FINAL PRODUCT DELIVERY.

UNLESS OTHERWISE SPECIFIED			ORIGINATOR	Y.ORLOV	21-AUG-2012
0.X	0.XX	ANGLE	DRAWN	J.COGHILL	21-AUG-2012
± 0.5	± 0.12	±0.5°	CHECKED		
1. BREAK ALL SHARP EDGES 0.5 MAX. 2. DO NOT SCALE DRAWING. 3. DIMENSIONS BASED UPON ASME Y14.5M-1994 4. MAX. ALL MACH. SURFACES 63 √ 5. DRAWING UNITS: MM			APPROVED		
			USED ON		
			MATERIAL	STNLS STL 316L 1/2" TUBE STOCK	

FERMI NATIONAL ACCELERATOR LABORATORY
UNITED STATES DEPARTMENT OF ENERGY

ASTA - CAPTURE CAVITY 1 COLDMASS-CC1 ASSEMBLY TUBE 1/2" X .035" WALL 316SS

SCALE	DRAWING NUMBER	SHEET	REV
1:4	3886.801-MD-	1 OF 1	

CREATED WITH : Ideas12NXSeries GROUP: TD/DDCIS-DESIGN-COMPUTING

Created: 07:48:37 on 29-08-12 (D-M-Y) By: coghill State: 1-INITIAL

REV	DESCRIPTION	DRAWN	DATE
		APPROVED	DATE
-	ER #10504 NEW RELEASE		

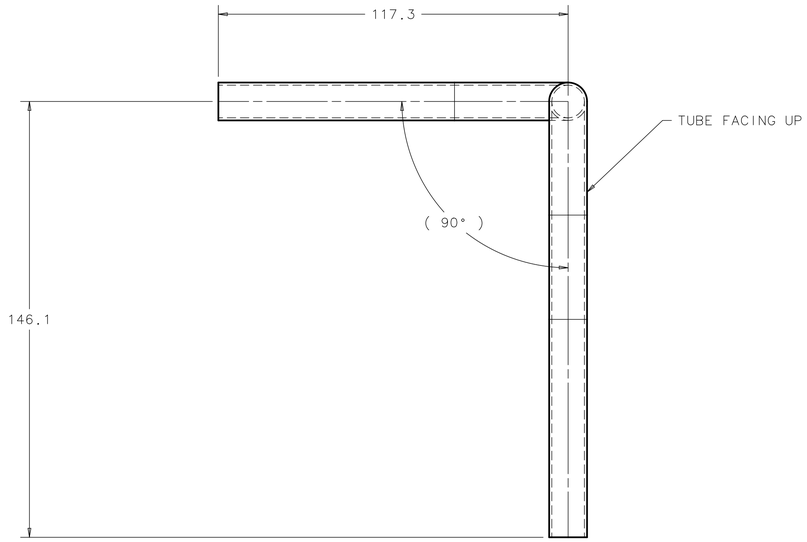

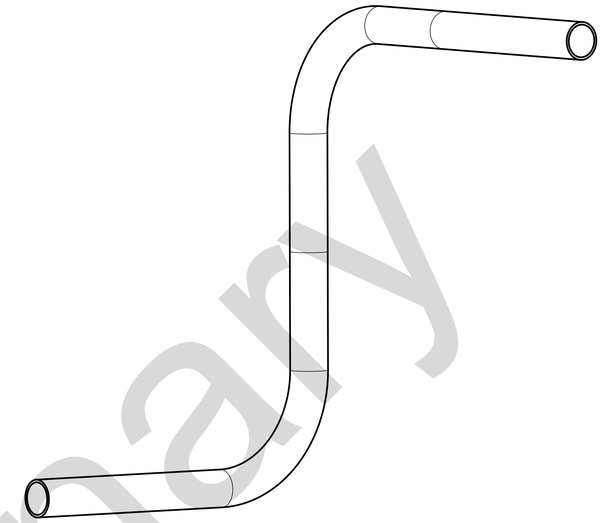

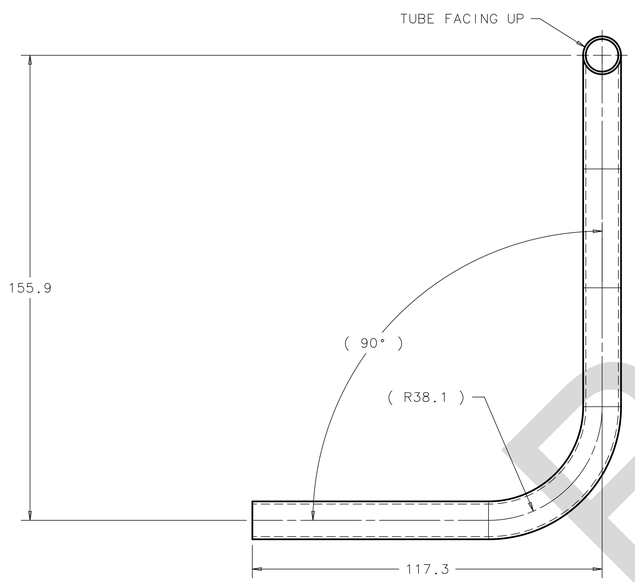

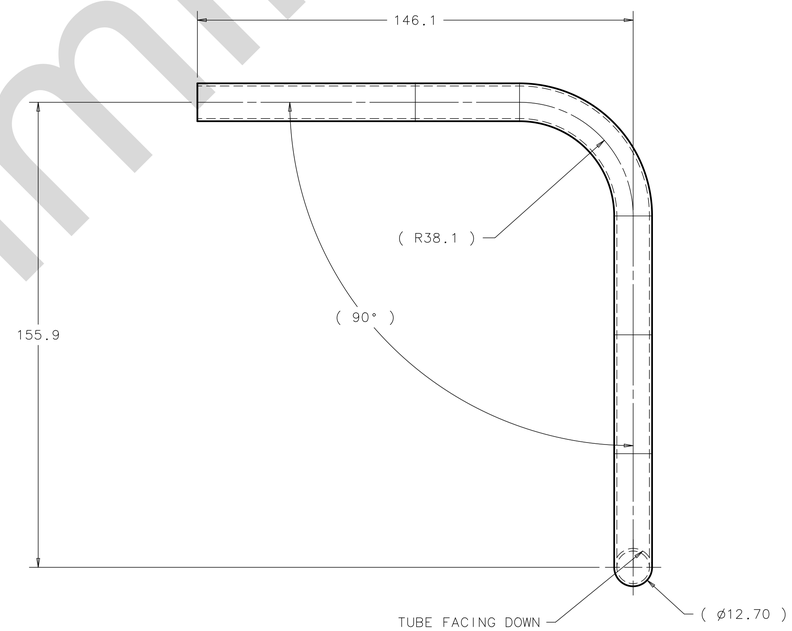

Preliminary

NOTES (UNLESS OTHERWISE SPECIFIED):

1. PART MUST BE FREE OF DIRT, GREASE, OIL AND CHIPS.
2. PART TO BE FREE OF ALL SHARP EDGES, CORNERS, AND BURRS.
3. ALL CENTER BEND RADIUS TO BE 38.1MM [1.5"] UNLESS OTHERWISE SPECIFIED.
4. APPROXIMATE CENTERLINE LENGTH - 386.6MM
5. ALL WELDS TO BE VACUUM LEAK TIGHT.
   LEAK TEST: NO LEAK SHALL BE DETECTABLE ON THE MOST SENSITIVE SCALE OF A HELIUM LEAK DETECTOR WITH A MINIMUM SENSITIVITY OF 10^{-9} ATM. CC/SEC.
6. ALL WELDS TO COMPLY WITH PRESSURE PIPING CODE ASME B31.3-2008 OR LATER FOR NORMAL FLUID SERVICE, RELATED DOCUMENTATION OF MATERIALS, WELDING, AND IN-PROCESS INSPECTION MUST BE INCLUDED WITH FINAL PRODUCT DELIVERY.

UNLESS OTHERWISE SPECIFIED			ORIGINATOR	Y.ORLOV	21-AUG-2012
0.X	0.XX	ANGLE	DRAWN	J.COGHILL	21-AUG-2012
± 0.5	± 0.12	±0.5°	CHECKED		
1. BREAK ALL SHARP EDGES 0.5 MAX. 2. DO NOT SCALE DRAWING. 3. DIMENSIONS BASED UPON ASME Y14.5M-1994 4. MAX. ALL MACH. SURFACES 63 √ 5. DRAWING UNITS: MM			APPROVED		
			USED ON		
			MATERIAL STNLS STL 316L 1/2" TUBE STOCK		

FERMI NATIONAL ACCELERATOR LABORATORY
UNITED STATES DEPARTMENT OF ENERGY

ASTA - CAPTURE CAVITY 1 COLDMASS-CC1 ASSEMBLY TUBE 1/2" X .035" WALL 316SS-1

SCALE	DRAWING NUMBER	SHEET	REV
1:1	3886.801-MD-	1 OF 1	

CREATED WITH : Ideas12NXSeries GROUP: TD/DDCIS-DESIGN-COMPUTING

REV	DESCRIPTION	DRAWN	DATE
		APPROVED	DATE
–	ER #10504 NEW RELEASE		

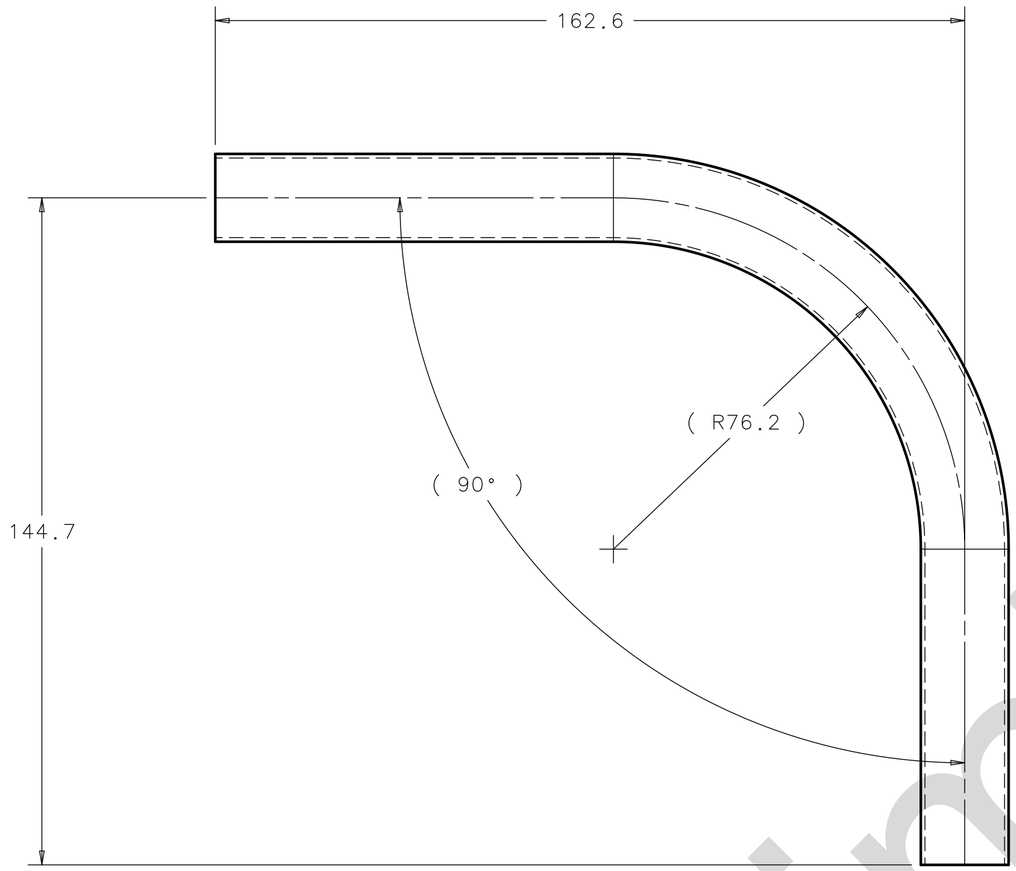

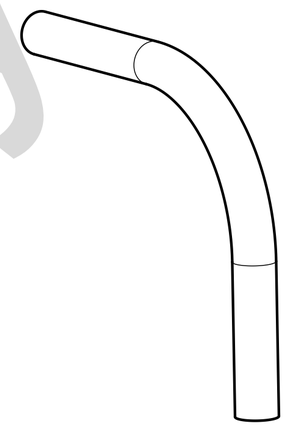

Preliminary

NOTES (UNLESS OTHERWISE SPECIFIED):

1. PART MUST BE FREE OF DIRT, GREASE, OIL AND CHIPS.
2. PART TO BE FREE OF ALL SHARP EDGES, CORNERS, AND BURRS.
3. ALL CENTER BEND RADIUS TO BE 76.2MM [3"] UNLESS OTHERWISE SPECIFIED.
4. APPROXIMATE CENTERLINE LENGTH - 274.5MM
5. ALL WELDS TO BE VACUUM LEAK TIGHT.
   LEAK TEST: NO LEAK SHALL BE DETECTABLE ON THE MOST SENSITIVE SCALE OF A HELIUM LEAK DETECTOR WITH A MINIMUM SENSITIVITY OF 10^{-9} ATM. CC/SEC.
6. ALL WELDS TO COMPLY WITH PRESSURE PIPING CODE ASME B31.3-2008 OR LATER FOR NORMAL FLUID SERVICE, RELATED DOCUMENTATION OF MATERIALS, WELDING, AND IN-PROCESS INSPECTION MUST BE INCLUDED WITH FINAL PRODUCT DELIVERY.

UNLESS OTHERWISE SPECIFIED			ORIGINATOR	Y.ORLOV	21-AUG-2012
0.X	0.XX	ANGLE	DRAWN	J.COGHILL	21-AUG-2012
± 0.5	± 0.13	±0.5°	CHECKED		
1. BREAK ALL SHARP EDGES 0.5 MAX. 2. DO NOT SCALE DRAWING. 3. DIMENSIONS BASED UPON ASME Y14.5M-1994 4. MAX. ALL MACH. SURFACES 5. DRAWING UNITS: MM			APPROVED		
			USED ON		
			MATERIAL	STNLS STL 316L 3/4" TUBE STOCK	

FERMI NATIONAL ACCELERATOR LABORATORY
UNITED STATES DEPARTMENT OF ENERGY

ASTA - CAPTURE CAVITY 1 COLDMASS-CC1 ASSEMBLY TUBE 3/4" X .035" WALL 316SS-1

SCALE	DRAWING NUMBER	SHEET	REV
1:2	3886.801-MC-	1 OF 1	

CREATED WITH : Ideas12NXSeries GROUP: TD/DDCIS-DESIGN-COMPUTING

REV	DESCRIPTION	DRAWN	DATE
		APPROVED	DATE
–	ER #10504 NEW RELEASE		

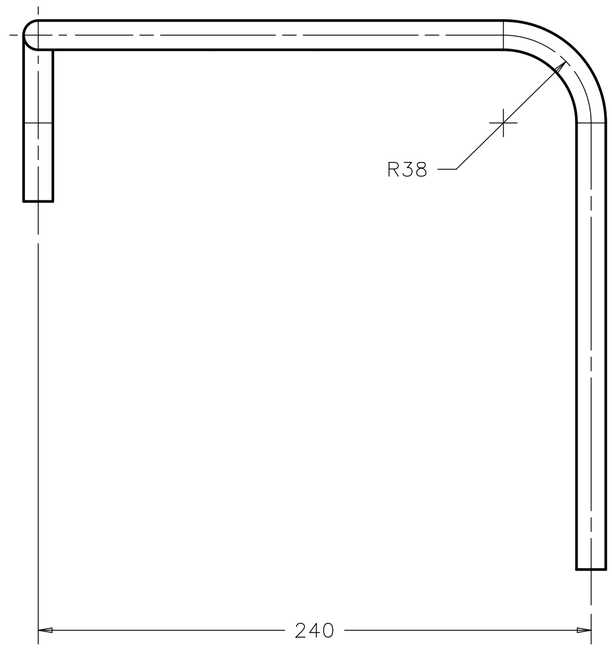

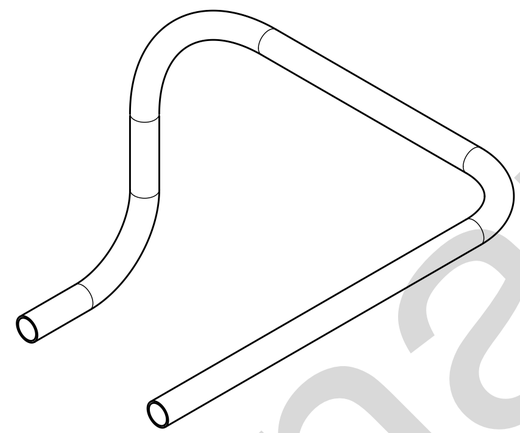

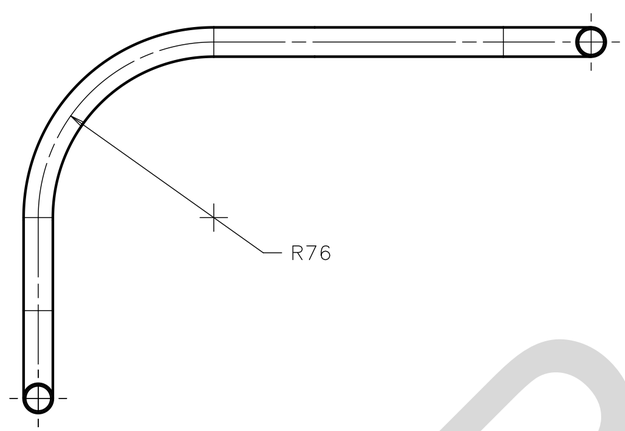

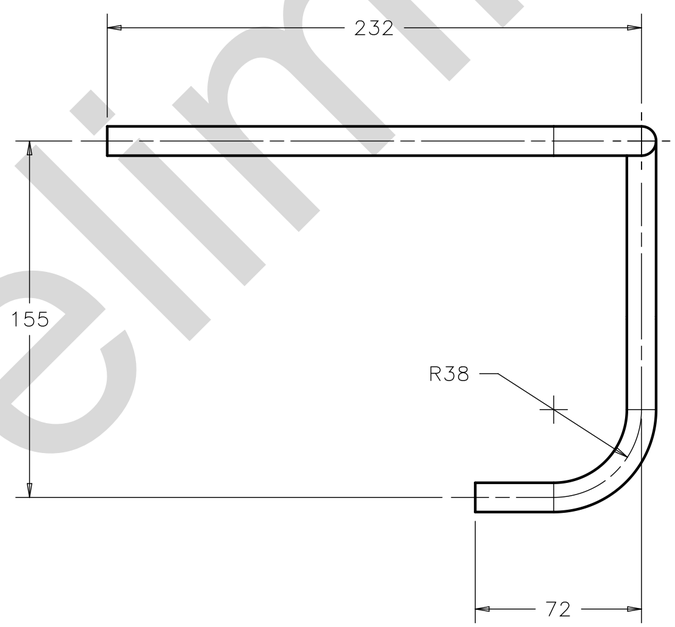

Preliminary

NOTES (UNLESS OTHERWISE SPECIFIED):

1. PART TO BE FREE OF DIRT, GREASE, OIL, AND CHIPS.

UNLESS OTHERWISE SPECIFIED			ORIGINATOR	Y.ORLOV	21-AUG-2012
X	0.X	ANGLE	DRAWN	M.BATTISTA	24-AUG-2012
± 1	± --	± --	CHECKED		
1. BREAK ALL SHARP EDGES 0.5 MAX. 2. DO NOT SCALE DRAWING. 3. DIMENSIONS BASED UPON ASME Y14.5M-1994 4. MAX. ALL MACH. SURFACES 3.2 5. DRAWING UNITS: MM			APPROVED		
			USED ON		
			MATERIAL	TUBE - 1/2" OD X .035 WALL 316L STAINLESS STEEL	

FERMI NATIONAL ACCELERATOR LABORATORY
UNITED STATES DEPARTMENT OF ENERGY

ASTA - CAPTURE CAVITY 1 TUBE WARMUP COOL-DOWN ASSEMBLY TUBE - EXPANSION-WARMUP CAP CAV

SCALE	DRAWING NUMBER	SHEET	REV
1:2	3886.801-MC-	1 OF 1	

CREATED WITH : Ideas12NXSeries | GROUP: TD/DDCIS-DESIGN-COMPUTING

REV	DESCRIPTION	DRAWN	DATE
		APPROVED	DATE
–	ER #10504 NEW RELEASE		

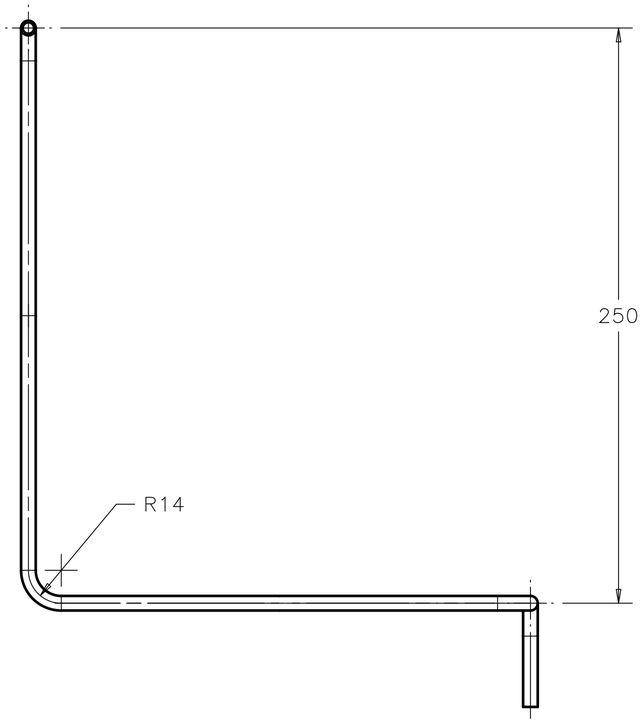

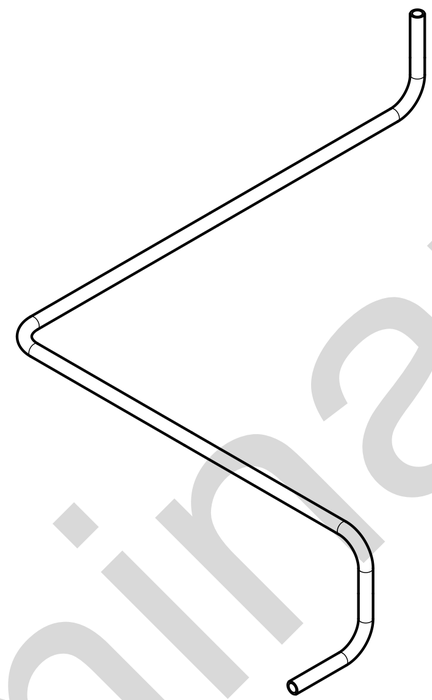

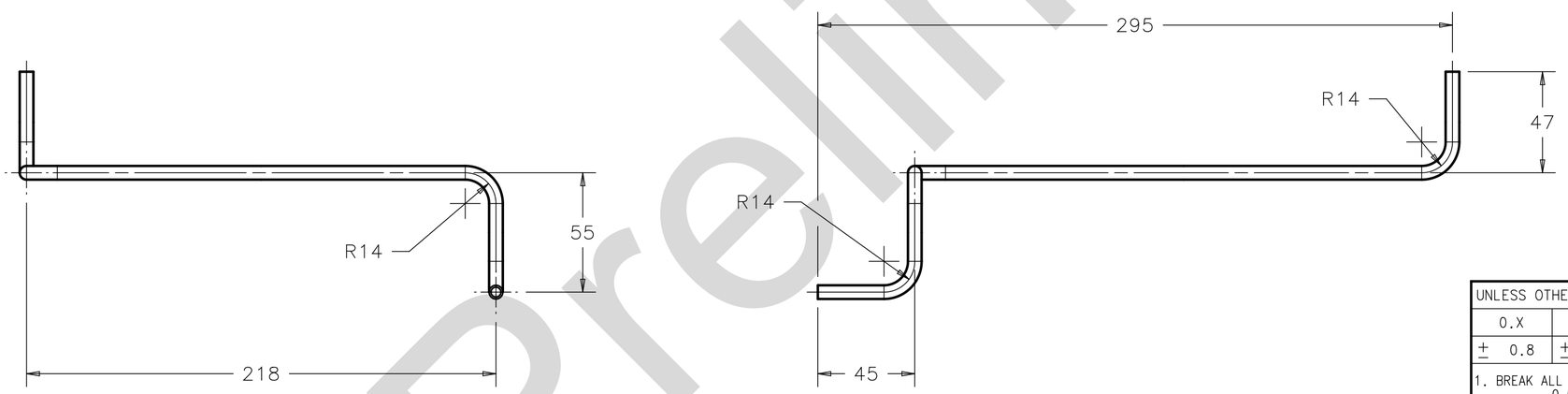

Preliminary

UNLESS OTHERWISE SPECIFIED			ORIGINATOR	Y.ORLOV	21-AUG-2012
0.X	0.XX	ANGLE	DRAWN	M.BATTISTA	23-AUG-2012
± 0.8	± --	± 1°	CHECKED		
			APPROVED		

1. BREAK ALL SHARP EDGES 0.5 MAX.
2. DO NOT SCALE DRAWING.
3. DIMENSIONS BASED UPON ASME Y14.5M-1994
4. MAX. ALL MACH. SURFACES 3.2
5. DRAWING UNITS: MM

USED ON

MATERIAL
TUBE - 1/4" OD X .035 WALL
316L STAINLESS STEEL

FERMI NATIONAL ACCELERATOR LABORATORY
UNITED STATES DEPARTMENT OF ENERGY

ASTA - CAPTURE CAVITY 1 TUBE WARMUP COOL-DOWN ASSEMBLY TUBE - INLET

SCALE	DRAWING NUMBER	SHEET	REV
1:2	3886.801-MC-	1 OF 1	

CREATED WITH : Ideas12NXSeries | GROUP: TD/DDCIS-DESIGN-COMPUTING

NOTES (UNLESS OTHERWISE SPECIFIED):

1. PART TO BE FREE OF DIRT, GREASE, OIL, AND CHIPS.

REV	DESCRIPTION	DRAWN	DATE
		APPROVED	DATE
–	ER #10504 NEW RELEASE		

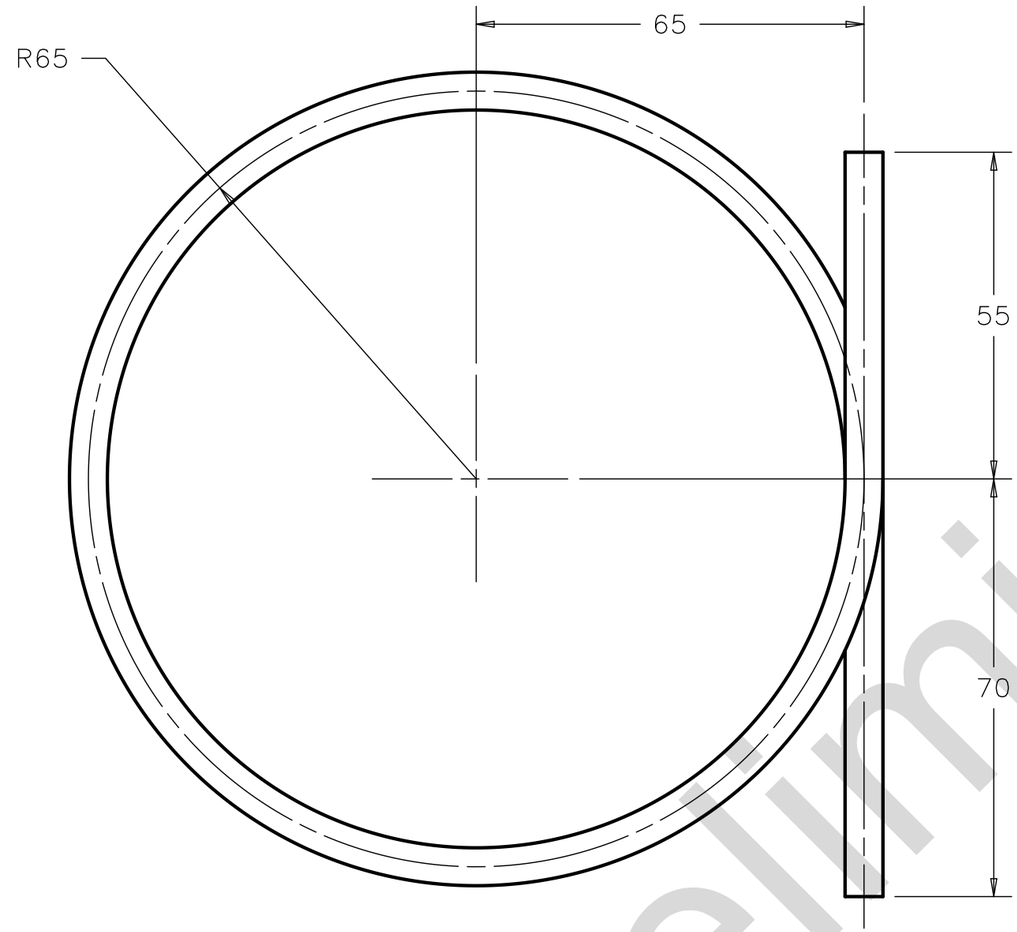

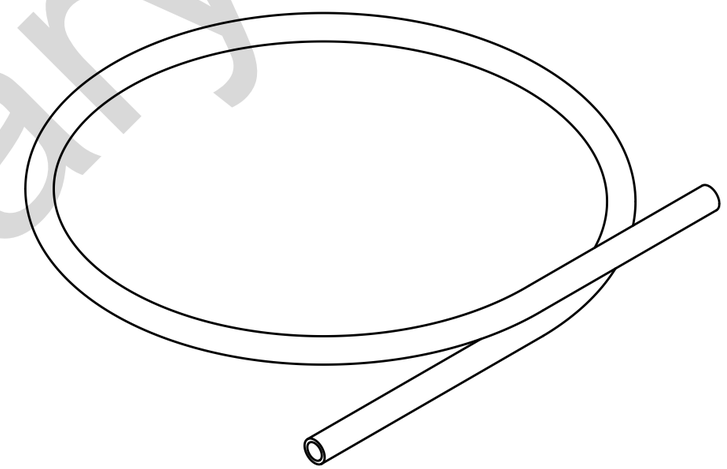

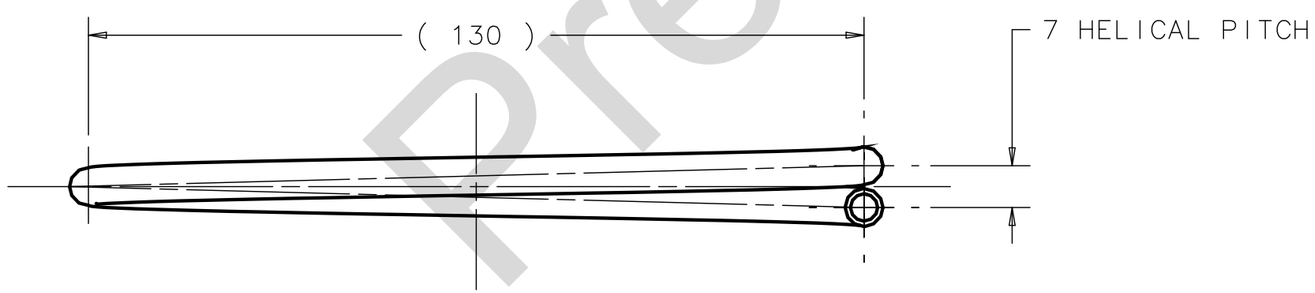

Preliminary

NOTES (UNLESS OTHERWISE SPECIFIED):

1. PART TO BE FREE OF DIRT, GREASE, OIL, AND CHIPS.

UNLESS OTHERWISE SPECIFIED			ORIGINATOR	Y.ORLOV	22-AUG-2012
X	0.X	ANGLE	DRAWN	M.BATTISTA	23-AUG-2012
± 1	± --	± 1°	CHECKED		
1. BREAK ALL SHARP EDGES 0.5 MAX. 2. DO NOT SCALE DRAWING. 3. DIMENSIONS BASED UPON ASME Y14.5M-1994 4. MAX. ALL MACH. SURFACES 3.2 5. DRAWING UNITS: MM			APPROVED		
			USED ON		
			MATERIAL	TUBE - 1/4"OD X .035 WALL 316L STAINLESS STEEL	

FERMI NATIONAL ACCELERATOR LABORATORY
UNITED STATES DEPARTMENT OF ENERGY

ASTA - CAPTURE CAVITY 1
TUBE WARMUP COOL-DOWN ASSEMBLY
TUBE - LOOP - CAPILLARY CAVITY

SCALE	DRAWING NUMBER	SHEET	REV
1:1	3886.801-MB-	1 OF 1	

CREATED WITH : Ideas12NXSeries | GROUP: TD/DDCIS-DESIGN-COMPUTING

Created: 10:19:55 on 29-08-12 (D-M-Y) By: battista State: 1-INITIAL

REV	DESCRIPTION	DRAWN	DATE
		APPROVED	DATE
–	ER #10504 NEW RELEASE		

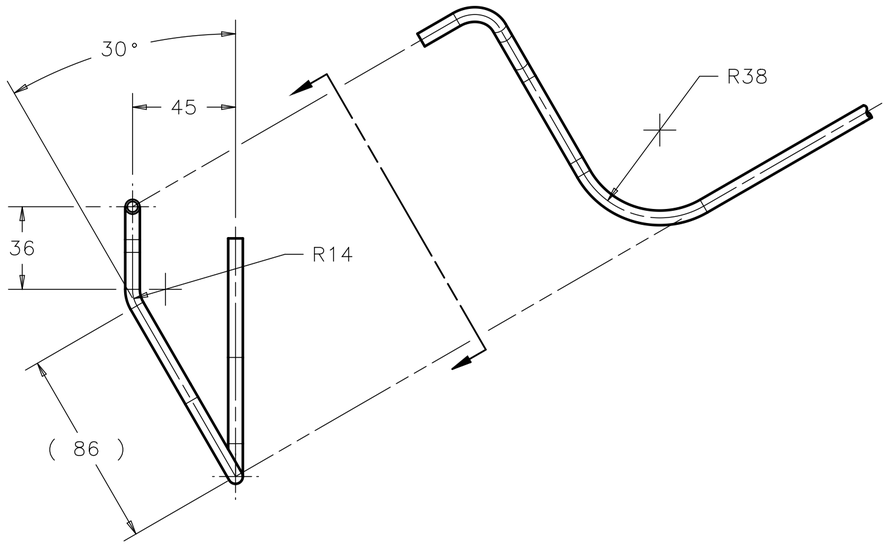

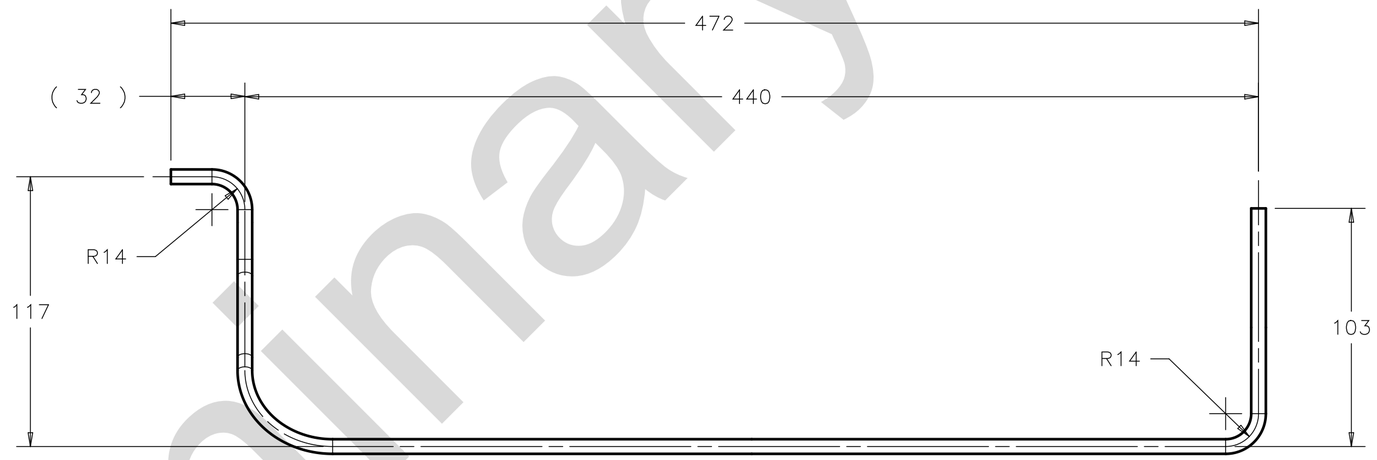

Preliminary

NOTES (UNLESS OTHERWISE SPECIFIED):

1. PART TO BE FREE OF DIRT, GREASE, OIL, AND CHIPS.

UNLESS OTHERWISE SPECIFIED			ORIGINATOR	Y.ORLOV	21-AUG-2012
X	0.X	ANGLE	DRAWN	M.BATTISTA	23-AUG-2012
± 1	± --	± 1°	CHECKED		
1. BREAK ALL SHARP EDGES 0.5 MAX. 2. DO NOT SCALE DRAWING. 3. DIMENSIONS BASED UPON ASME Y14.5M-1994 4. MAX. ALL MACH. SURFACES 3.2 5. DRAWING UNITS: MM			APPROVED		
			USED ON		
			MATERIAL	TUBE - 1/4" OD X .035 WALL 316L STAINLESS STEEL	

FERMI NATIONAL ACCELERATOR LABORATORY
UNITED STATES DEPARTMENT OF ENERGY

ASTA - CAPTURE CAVITY 1 TUBE WARMUP COOL-DOWN ASSEMBLY TUBE - OUTLET

SCALE	DRAWING NUMBER	SHEET	REV
1:2	3886.801-MC-	1 OF 1	

CREATED WITH : Ideas12NXSeries GROUP: TD/DDCIS-DESIGN-COMPUTING

REV	DESCRIPTION	DRAWN	DATE
		APPROVED	DATE
	ER# 10504 NEW RELEASE		

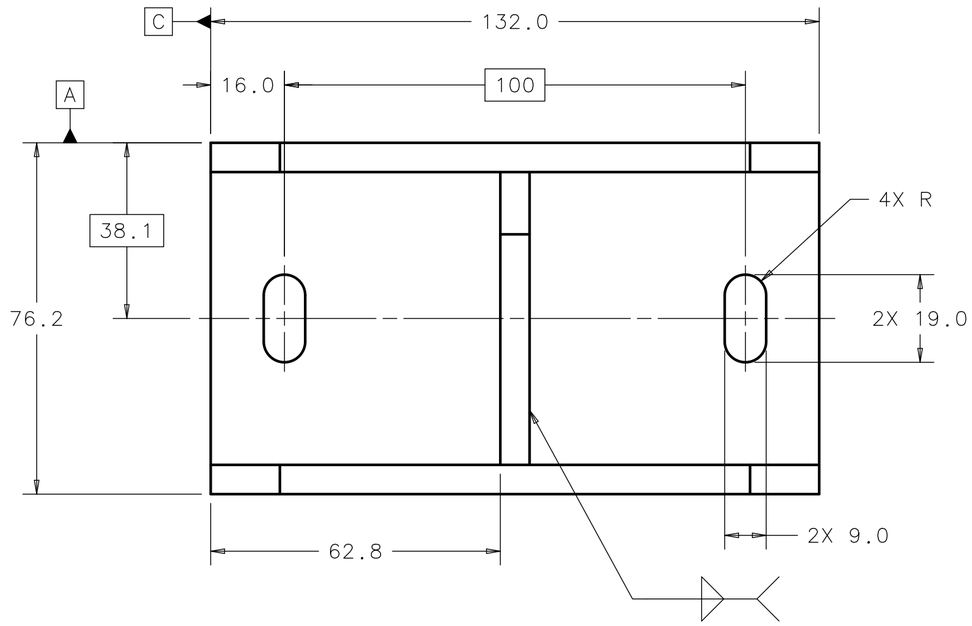

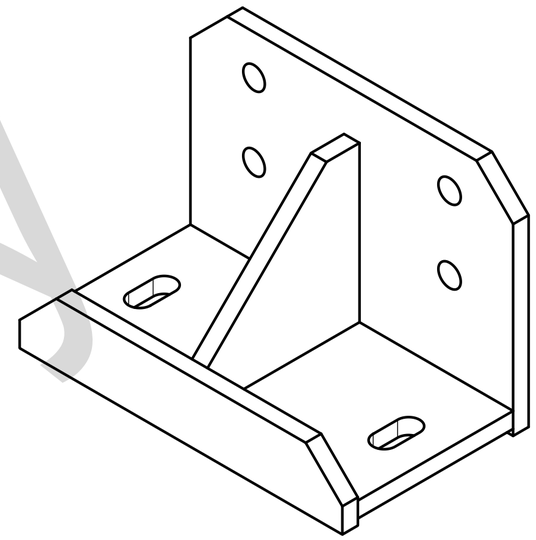

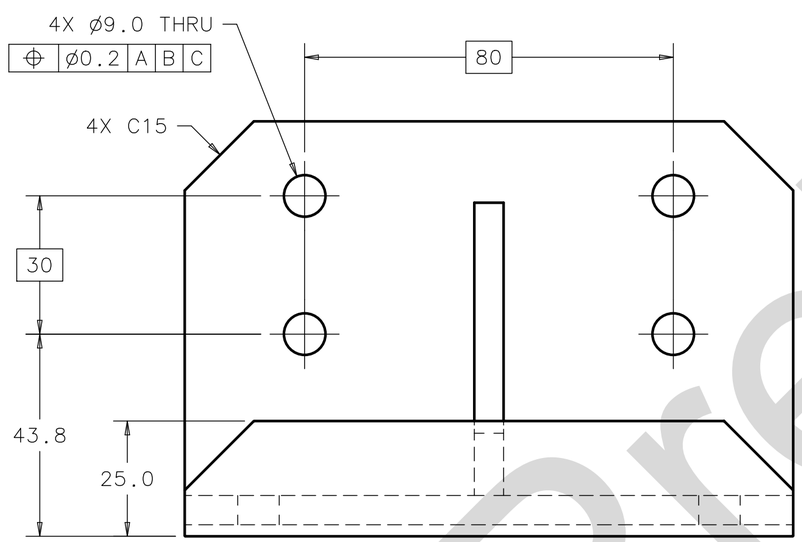

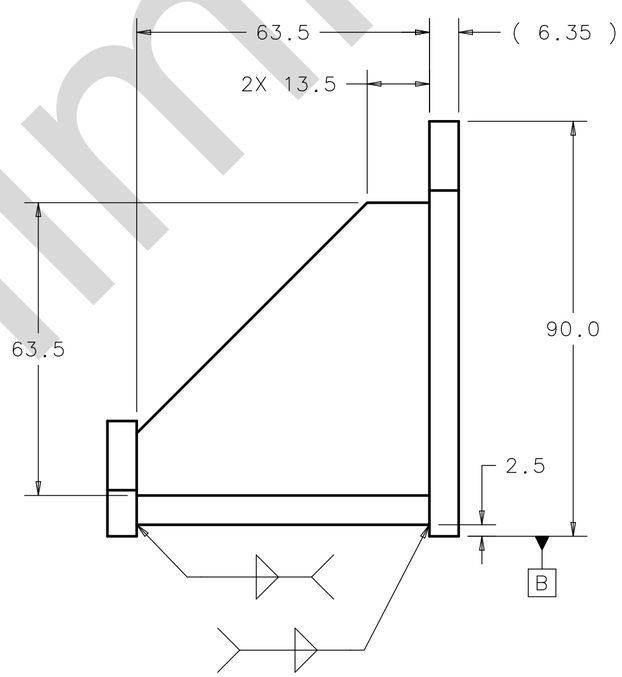

Preliminary

NOTES (UNLESS OTHERWISE SPECIFIED):

1. WELDMENT MUST BE FREE OF DIRT, GREASE, OIL AND CHIPS.
2. PERFORM FINAL MACHINING AFTER WELDING.
   STRESS RELIEVE AFTER WELDING AND BEFORE MACHINING.
   FINAL MACHINING AFTER WELDING IF REQUIRED.
   MACHINING MAY BE PERFORMED PRIOR TO WELDING.

UNLESS OTHERWISE SPECIFIED			ORIGINATOR	Y.ORLOV	29-AUG-2012
0.X	0.XX	ANGLES	DRAWN	V.MARTINEZ	29-AUG-2012
± 0.5	± 0.30	± 1°	CHECKED		
1. BREAK ALL SHARP EDGES 0.5 MAX. 2. DO NOT SCALE DRAWING. 3. DIMENSIONS BASED UPON ASME Y14.5M-1994 4. MAX. ALL MACH. SURFACES 3.2 5. DRAWING UNITS: MM			APPROVED		
			USED ON		
			MATERIAL	1/4" PLATE ALUMINUM 6061-T6	

FERMI NATIONAL ACCELERATOR LABORATORY
UNITED STATES DEPARTMENT OF ENERGY

ASTA - CAPTURE CAVITY 1 COLDMASS - CC1 ASSEMBLY VAT SUPPORT BRACKET WLDMT

SCALE	DRAWING NUMBER	SHEET	REV
1:1	3886.801-MC-	1 OF 1	

CREATED WITH : Ideas12NXSeries | GROUP: TD/DDCIS-DESIGN-COMPUTING

REV	DESCRIPTION	DRAWN	DATE
		APPROVED	DATE
–	ER #10502 NEW RELEASE		

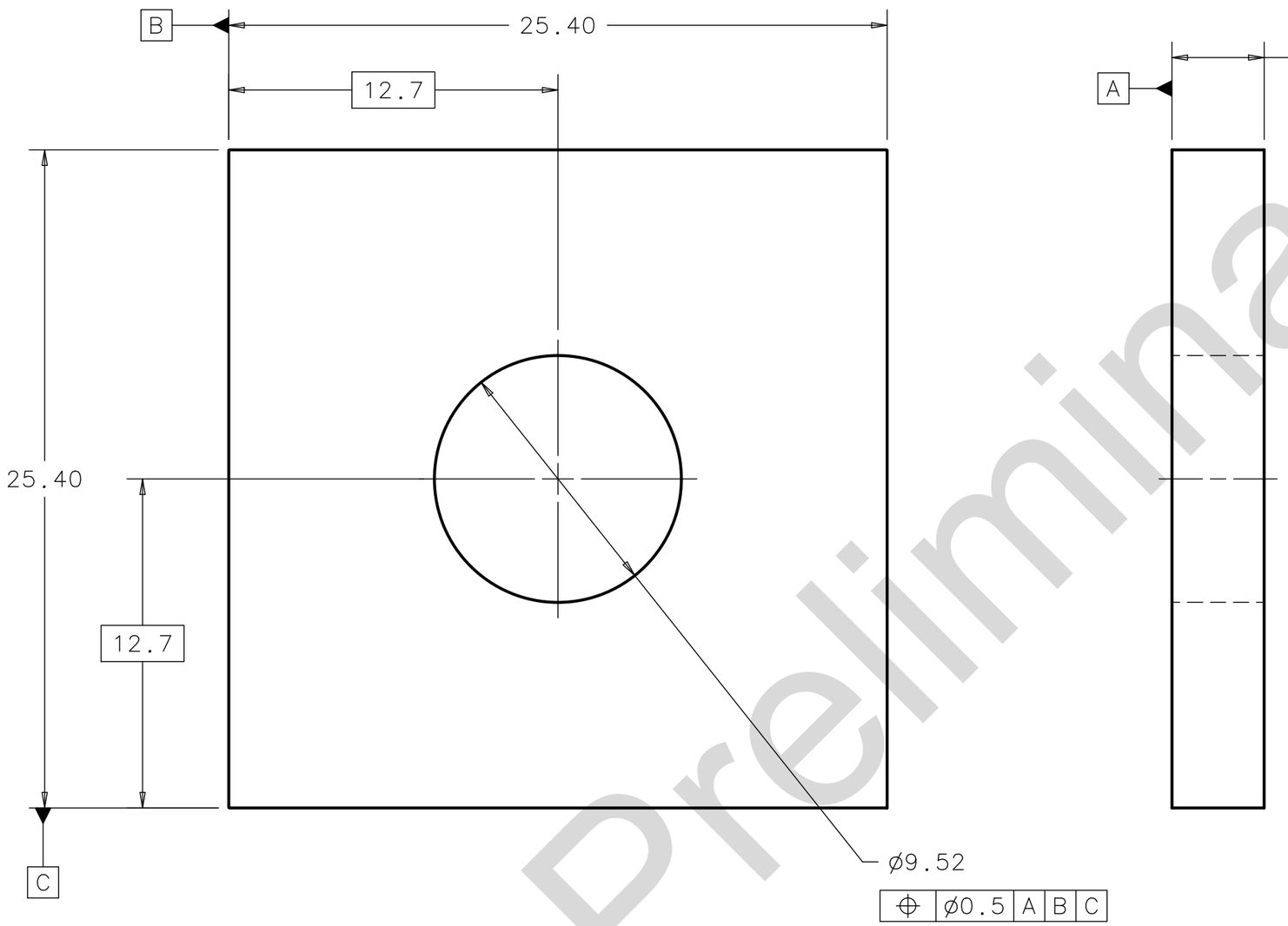

Preliminary

NOTES (UNLESS OTHERWISE SPECIFIED):

1. PART MUST BE FREE OF DIRT, GREASE, OIL AND CHIPS.
2. PART TO BE FREE OF ALL SHARP EDGES, CORNERS, AND BURRS.

UNLESS OTHERWISE SPECIFIED			ORIGINATOR	Y.ORLOV	29-AUG-2012
0.X	0.XX	ANGLE	DRAWN	J.COGHILL	29-AUG-2012
± 0.8	± 0.12	±0.5°	CHECKED		
1. BREAK ALL SHARP EDGES 0.5 MAX. 2. DO NOT SCALE DRAWING. 3. DIMENSIONS BASED UPON ASME Y14.5M-1994 4. MAX. ALL MACH. SURFACES N8 5. DRAWING UNITS: MM			APPROVED		
			USED ON		
			MATERIAL	COPPER ALLOY 110	

FERMI NATIONAL ACCELERATOR LABORATORY
UNITED STATES DEPARTMENT OF ENERGY

ASTA – CAPTURE CAVITY 1 COLDMASS-CC1 ASSEMBLY WASHER SQUARE

SCALE	DRAWING NUMBER	SHEET	REV
5:1	3886.801-MB-	1 OF 1	

CREATED WITH : Ideas12NXSeries | GROUP: TD/DDCIS-DESIGN-COMPUTING

Created: 11:00:41 on 29-08-12 (D-M-Y) By: coghill State: 1-INITIAL