**QW-482 (Back)**

**WPS No.** GT-5101 **Rev.** 1

| POSITIONS (QW-405) | | POSTWELD HEAT TREATMENT (QW-407) | **NONE** |
|---|---|---|---|
| Position(s) of Groove | All Positions | Temperature Range | N/A |
| Welding Progression: | Up X Down | Time Range | N/A |
| Position(s) of Fillet | All Positions | | |

| PREHEAT (QW-406) | | GAS (QW-408) (See Note 3) | Gas(es) | Percent Composition (Mixture) | Flow Rate |
|---|---|---|---|---|---|
| Preheat Temp. Min. | 50 ° F. Minimum | GTAW Shielding | Argon | Welding Grade | 10 - 35 CFH |
| Interpass Temp. Max. | 250 ° F. Maximum | GMAW Shielding | N/A | N/A | N/A |
| Preheat Maintenance: | 50 ° F. Minimum | Trailing (Note 2) | Argon | Welding Grade | 10 - 35 CFH |
| | | Backing | Argon | Welding Grade | 5 - 20 CFH |

ELECTRICAL CHARACTERISTICS (QW-409)

Current AC or DC Direct Current Polarity Electrode Negative Pulsing Current Non Pulsed

Amps (Range) See Chart Volts (Range) See Chart Max. Heat Input N/A kJ/in.

(Amps and volts range should be recorded for each electrode size, position, and thickness, etc. This information may be listed in tabular form similar to that shown below.)

Note 2: **The weld pool, solidified weld, Hot HAZ and the root side of the weld shall be protected until the temperature cools to below 800° F. Maximum Dew Point of Gas shall be -60° F.**

Tungsten Electrode Size and Type 3/32" and/or 1/8" EWCe-2 (2% Ceriated; Orange Tipped) Ground to a point.
(Pure Tungsten, 2% Thoriated, etc.)

Mode of Metal Transfer for GMAW N/A
(Spray arc, short circuiting arc, etc.)

Electrode Wire feed speed range N/A

TECHNIQUE (QW-410)

String or Weave Bead String and/or Slight Weave

Orifice or Gas Cup Size 3/4" thru1.25" (Gas Cup Nozzle Shall be oversized to cover a larger area). Use of Gas Lens required.

Initial and Interpass Cleaning (Brushing, Grinding, etc.) Base metal shall be cleaned within one inch of each side of the Weld Joint Minimum. Steam Clean, Hot Water and Detergent Wash and Non-Chlorinated Degreasing Solvents such as 100 % Acetone and Alcohol. Stainless Steel Wire Brush (Used on no other materials), Grind (Using Aluminum Oxide or Silicon Carbide Wheels) Grind Slowly to prevent heat build-up.

Method of Back Gouging If required, Grind

Oscillation N/A

Contact Tube to Work Distance Electrode extension 1-1/2 times diameter past the end of the Nozzle. Arc length 1.5 Times Diameter

Multiple or Single Pass (per side) Single or Multiple Passes

Multiple or Single Electrodes Single Electrode Spacing N/A

Travel Speed (Range) See Chart

Peening None

Closed to out Chamber Flow Purged Chamber

Maximum Fill Pass Thickness No single weld pass to be over 1/2" thick

Thermal Process N/A

Other **NOTE 3:** Gas hoses should be nonporous, flexible and made only of polytetrafluoroethyene (PTFE), polypropylene (PP), or high density polyetylene (HDPE). Fluorinated ethylene (FEP)-lined Tygon is recommended. Rubber hoses **SHALL NOT** be employed during welding.
The Bead should be a silver color and shiny. Any discoloration of the surface indicates contamination. A purple, Dark Blue to Light Blue, or Yellow to Gray to White coloration indicate excessive contamination.

| Weld Layer(s) | Process | Filler Metal: Filler Metal Classification | Filler Metal: Electrode / Filler Metal Diameter | Current: Polarity | Current: Range | Volt Range | Travel Speed Range IPM | (e.g., Remarks, Comments, Hot Wire Addition, Technique, Torch Angle, Etc.) |
|---|---|---|---|---|---|---|---|---|
| Thru 1/8" | GTAW | ERTi-2 | 1/16" or 3/32" | DCEN | 100 - 180 | 8 - 16 | 2 - 6 IPM | NOTE: Voltage and Travel Speeds are for information only. Actual values may vary. |
| 1/8" and Over | GTAW | ERTi-2 | 3/32" or 1/8" | DCEN | 150 - 250 | 10 - 15 | 2 - 8 IPM | |

# QW-483 PROCEDURE QUALIFICATION RECORD (PQR)

**(See QW-200.2, Section IX, ASME Boiler and Pressure Vessel Code)**

**Record Actual Conditions Used to Weld Test Coupon.**

Company Name: Hi-Tech Manufacturing

Procedure Qualification Record No.: GT-5101 Date: December 10, 2007

WPS No.: GT-5101

Welding Process(es): GTAW

Types (Manual, Automatic, Semi-Auto.): Manual

**JOINTS (QW-402)**

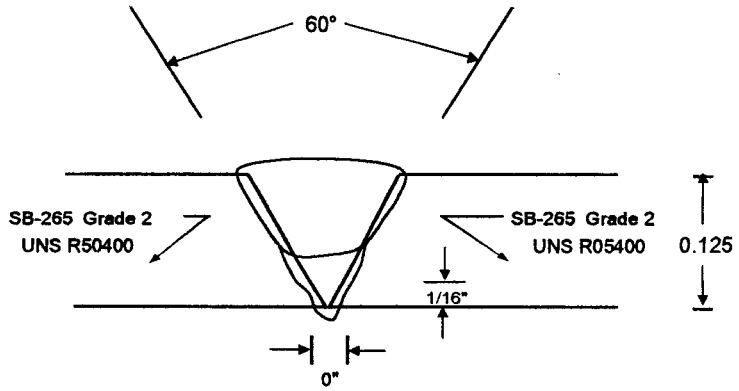


Groove Design of Test Coupon

(For combination qualifications, the deposited weld metal thickness shall be recorded for each filler metal or process used.)

**BASE METALS (QW-403)**

Material Spec. SB-265 to SB-265

Type or Grade Grade 2 to Grade 2

P-No. 51 Group No. --- to P-No. 51 Group No. ---

Thickness of Test Coupon 0.125

Diameter of Test Coupon 1/8" Thick Plate

Retainers Employed None

Other

**POSTWELD HEAT TREATMENT (QW-407)** NONE

Temperature N/A

Time N/A

Other

**GAS (QW-408)**

Percent Composition

| | Gas(es) | (Mixture) | Flow Rate |
|---|---|---|---|
| GTAW Shielding | Argon | Welding Grade | 25 CFH |
| FCAW Shielding | N/A | N/A | N/A |
| Trailing | Argon | Welding Grade | 20 CFH |
| Backing | Argon | Welding Grade | 8 CFH |

**FILLER METALS (QW-404)**

| | GTAW | |
|---|---|---|
| SFA Specification | A5.16 | |
| AWS Classification | ERTi-2 | |
| Filler Metal F-No. | 51 | |
| Weld Metal Analysis A-No. | None Assigned | |
| Size of Filler Metal | 1/16" | |
| Filler metal product form | Bare (Solid Wire) | |
| Consumable Inserts | None | |
| Additional Flux | None | |
| Deposited Weld Metal | ≈1/8" 0.125 | |
| Deposited Weld Metal Layers | 2 | |
| Supplemental Filler Metal | N/A | |
| Alloy Elements | N/A | |

**ELECTRICAL CHARACTERISTICS (QW-409)**

Current Direct Current

Polarity GTAW - Electrode Negative

Amps. GTAW 120 - 120 Volts 10 - 11

Amps. SMAW N/A - Volts N/A -

Tungsten Electrode Size 3/32" EWCe-2 (2% Ceriated - Orange Tippe

Heat Input GTAW 13.20 kJ/in. SMAW N/A kJ/in.

Pulsing Current Non Pulsed

Wire Feed Speed N/A IPM

**POSITION (QW-405)**

Position of Groove 1G (Flat)

Weld Progression (Uphill, Downhill) N/A

Other

**PREHEAT (QW-406)**

Preheat Temp. 70 ° F. (Ambient)

Interpass Temp. 200 ° F. Maximum

Other

**TECHNIQUE (QW-410)**

| | GTAW | SMAW |
|---|---|---|
| Travel Speed | 6.0 - 6.0 IPM | N/A IPM |
| String or Weave Bead | Stringer | |
| Oscillation | N/A | |
| Multipass or Single Pass (per side) | Multipass | |
| Single or Multiple Electrodes | Single | Spacing N/A |
| Gas cup size | 3/4" With 1" Gas Lens (Trailing) | |
| Interpass Cleaning | Acetone Wipe and Brushing | |
| Back gouge Method | None | |
| Peening | None | |
| Oscillation | N/A | Closed to Out Chamber Flow Purged Chamber |
| Thermal Process | N/A (Applies to P11A and P11B) | |
| Other | No single weld pass was over 1/2" thick | |

## QW-483 (Back)

PQR No. GT-5101

### Tensile Test (QW-150)

| Specimen No. | Width | Thickness | Area | Ultimate Total Load lb. | Ultimate Unit Stress psi | Type of Failure & Location |
|---|---|---|---|---|---|---|
| 11597-T1 | 0.922 | 0.129 | 0.119 | 8,200 | 68,943 | Ductile - Base Metal |
| 11597-T2 | 0.898 | 0.129 | 0.116 | 7,900 | 68,196 | Ductile - Base Metal |

### Guided-Bend Tests (QW-160)

| Type and Figure No. | Results |
|---|---|
| Two Face Bends; Figure #QW-462.3(a) | Two Face Bends - Acceptable |
| Two Root Bends; Figure #QW-462.3(a) | Two Root Bends - Acceptable |

### Toughness Tests (QW-170)

| Specimen No. | Notch Location | Notch Type | Specimen Size | Test Temp. | Impact Values | Lateral Expansion | | Drop Weight | |
|---|---|---|---|---|---|---|---|---|---|
| | | | | | | % Shear | .001" | Break | No Break |
| N/A | | | | | | | | | |
| N/A | | | | | | | | | |
| N/A | | | | | | | | | |
| N/A | | | | | | | | | |
| N/A | | | | | | | | | |
| N/A | | | | | | | | | |

### Fillet-Weld Test (QW-180)

Result - Satisfactory: Yes _____ No _____ Penetration into Parent Metal: Yes _____ No _____

Macro - Results _____

### Other Tests

Type of Test _____

Deposit Analysis _____

Other _____

**Hardness Measurements: Hardness measurements are recorded in Hardness Rockwell B Scale**

| Location | 1 | 2 | 3 | AVG. |
|---|---|---|---|---|
| Base Metal P 51 | N/A | N/A | N/A | |
| HAZ P 51 | N/A | N/A | N/A | |
| Weld Metal | N/A | N/A | N/A | |

| Location | 1 | 2 | 3 | AVG. |
|---|---|---|---|---|
| HAZ P 51 | N/A | N/A | N/A | |
| Base Metal P 51 | N/A | N/A | N/A | |
| | N/A | N/A | N/A | |

Welder's Name Tracz Stainslaw Clock No. _____ Stamp No. S1710

Tests conducted by: Calumet Testing Services Laboratory Test No. CTS Job No. 11597

**We certify that the statements in this record are correct and that the test welds were prepared, welded, and tested in accordance with the requirements of Section IX of the ASME Code**

Manufacturer Hi-Tech Manufacturing

**Date** December 18, 2007 **By** _____

(Detail of record of tests are illustrative only and may be modified to conform to the type and number of tests required by the Code)

Calumet Testing Services
1945 N. Griffith Blvd.
Griffith, Indiana 46319
(219) 923-9800—(708) 474-5860

X TENSILE TEST REPORT
X BEND TEST REPORT
___ HARDNESS TEST REPORT

CUSTOMER: Hi-Tech Manufacturing JOB NO. 11597
SAMPLE PQR GT-5101 SB-265 Type 2 P51
CODE ASME Sec. IX EDITION 2004/2006

Welder: Tracz Stainslaw
ID: S1710

TENSILE RESULTS:

| Specimen No. | Width inch | Thickness inch | Area Sq. in. | Yield Load (lb.) | Max. load (lb.) | Yield Strength (psi) | Ultimate Strength (psi) |
|---|---|---|---|---|---|---|---|
| 11597-T1 | 0.922 | 0.129 | 0.119 | N/A | 8,200 | N/A | 68,943 |
| 11597-T2 | 0.898 | 0.129 | 0.116 | N/A | 7,900 | N/A | 68,196 |

| Specimen No. | ELONGATION (% INCH) | Diameter (inch) | Character & Location of Fracture |
|---|---|---|---|
| 11052-T1 | N/A | N/A | Ductile/Base metal |
| 11052-T2 | N/A | N/A | Ductile/Base metal |

BEND RESULTS: Figure No. QW-462.3(a)

Side Bend N/A Side Bend N/A Side Bend N/A Side Bend N/A

11597-A Face Bend Acceptable
11597-B Root Bend Acceptable
11597-C Face Bend Acceptable
115970D Root Bend Acceptable

HARDNESS RESULTS: N/A

John A. Korienek

December 18, 2007
DATE

# QW-484 SUGGESTED FORMAT FOR WELDER/WELDING OPERATOR PERFORMANCE QUALIFICATIONS (WPQ)
## (See QW-301, Section IX, ASME Boiler and Pressure Vessel Code)

Welder's name: Tracz Stainslaw  Clock number: _____  Stamp no.: S1710
Welding process(es) used: GTAW  Type: Manual
Identification of WPS followed by welder during welding of test coupon: GT-5101, Revision 1; Dated December 18, 2007
Base material(s) welded: SB-265 Grade 2  Thickness: 0.125

| Manual or Semiautomatic Variables for Each Process (QW-350) | Actual Values | Range Qualified |
|---|---|---|
| Backing (metal, weld metal, welded from both sides, flux, etc.) (WQ-402) | None | With or Without Backing |
| ASME P-No. P No. 51 to ASME P-No. (QW-403) | P No. 51 | P51, P52, P53, P61 and P62 |
| [ X ] Plate [ ] Pipe (enter diameter, if pipe) | 1/8" Plate | Note 1 |
| Filler metal specification (SFA): A5.16 Classification (QW-404) | ERTi-2 | |
| Filler metal F-No. | F51 | F51 thru F55 |
| Filler metal variety for GTAW, PAW (QW-404) | Bare (solid) | Bare (Solid) or Metal Cored |
| Consumable insert for GTAW OR PAW | None | None |
| Weld deposit thickness for each welding process — No. of Layers 2 | GTAW 0.125 | Note 2 |
| No. of Layers N/A | SMAW N/A | N/A |
| Welding position (1G, 5G, etc.) (QW-405) | 1G (Rolled) | 1G and 1F |
| Progression (uphill/downhill) | N/A | N/A |
| Backing gas for GTAW, PAW, or GMAW; fuel gas for OFW (QW-408) | Argon | With Backing Gas |
| GMAW transfer mode (QW-409) | N/A | N/A |
| GTAW welding current type/polarity | DCEN | DCEN |

| Machine Welding Variables for the Process Used (QW-360) | Actual Values | Range Qualified |
|---|---|---|
| Direct/remote visual control | | |
| Automatic voltage control (GTAW) | | |
| Automatic joint tracking | | |
| Welding position (1G, 5G, etc.) | | |
| Consumable insert | | |
| Backing (metal, weld metal, welded from both sides, flux, etc.) | | |

**Guided Bend Test Results**

| Guided Bend Test Type | { } QW-462.2 (Side) Results | { X } QW-462.3(a) (Trans. R & F) Type | { } QW-462.3(b) (Long, R & F) Results |
|---|---|---|---|
| Two Face Bends | Passed PQR GT-5101on | | |
| Two Root Bends | December 18, 2007 | | |

Note 1: Diameters Qualified: Groove welds 2-7/8" O.D. and over, Unlimited diameters for fillet welds
Note 2: Thickness Qualified: Groove welds; Thru .250" Deposit Thickness with the GTAW Welding Process; Fillet welds Unlimited Thickness Weld Deposit for the GTAW Welding Process.

Visual examination results (QW-302.4): Acceptable
Radiographic test results (QW-304 and QW-305): N/A
(for alternative qualification of groove welds by radiography)
Fillet Weld - Fracture test: _____  Length and percent of defects: _____ in.
Macro test fusion: _____  Fillet leg size: _____ in. x _____ in.  Concavity/convexity: _____ in.
Welding test conducted by: Simon Sorsher
Mechanical tests conducted by: Calumet Testing Services  Laboratory test no.: CTS Job No. 11597

We certify that the statements in this record are correct and that the test coupons were prepared, welded, and tested in accordance with the requirements of Section IX of the ASME Code.

Organization: Hi-Tech Manufacturing

Date: December 18, 2007  By: _____

## QW-484A WELDER PERFORMANCE QUALIFICATIONS (WPQ)
## (See QW-301, Section IX, ASME Boiler and Pressure Vessel Code)

Welder's Name: Tracz Stainslaw  Clock number: _____  Stamp no.: S1710

### Test Description

Identification of WPS Followed: GT-5101, Revision 1; Dated December 18, 2007  [X] Test Coupon  [ ] Production Weld

Specification and Type/Grade or UNS Number of Base Metal(s): SB-265 Grade 2  Thickness: 0.040

To: SB-265 Grade 2

### Testing Conditions and Qualifications Limits

| Welding Variables for Each Process (QW-350) | Actual Values | Range Qualified |
|---|---|---|
| Welding process(es) used | GTAW | GTAW |
| Type (i.e.; Manual, semi-automatic) Used | Manual | Manual |
| Backing (With or Without) | Without Backing | With or Without Backing |
| [ ] Plate [ ] Pipe (enter diameter, if pipe or Tube) | .500" O.D. X 0.040" Thick Wall Tube | Note 1 |
| Base Metal P- or S-Number to P- or S-Number | 51 to 51 | P-No. 51 Thru P-No. 53, P-No. 61 Thru P-No. 62 |
| Filler Metal or Electrode Specification(s) (SFA) (Information Only) | A5.16 | |
| Filler Metal or Electrode Classification(s) (Information Only) | ERTi-2 | |
| Filler Metal F-Number(s) — Root Pass | F-No. 51 | 1, 2, 51 Thru 55 |
| Filler Metal F-Number(s) — Filler Passes | F-No. N/A | 1, 2, 51 Thru 55 |
| Consumable Insert (GTAW OR PAW) | None | None |
| Filler Metal Product Form (Solid/Metal or Flux Cored/Powder) (GTAW or PAW) | Bare Solid Wire | Bare (Solid) Filler |
| Weld deposit thickness for each welding process — No. of Layers 1 | GTAW 0.040 | Note 2 |
| No. of Layers N/A | SMAW N/A | N/A |
| Welding Position Qualified (2G, 6G,3F, etc...) | 1G | 1G and 1F |
| Vertical Progression (Uphill or Downhill) | N/A | N/A |
| Type of Fuel Gas (OFW) | N/A | N/A |
| Inert Gas Backing (GTAW, PAW, GMAW) | Argon | With Backing Gas |
| Transfer Mode (Spray/Globular or Pulse to Short Circuit-GMAW) | N/A | N/A |
| GTAW Current Type/Polarity (AC, DCEP, DCEN) | DCEN | DCEN |

### RESULTS

Visual Examination of Completed Weld (QW-302.4): Acceptable

[X] Transverse Face and Root Bends [QW-462.3(a)]  [ ] Longitudinal Bends [QW-462.3(b)]  [ ] Side Bends [QW-462.2]

[ ] Pipe Bend Specimen, Corrosion-Resistant Weld Metal Overlay [QW-462.5(c)]

[ ] Plate Bend Specimen, Corrosion-Resistant Weld Metal Overlay [QW-462.5(d)]

[ ] Pipe Specimen, Macro Test for Fusion [QW-462.5(b)]  [ ] Plate Specimen, Macro Test for Fusion [QW-462.5(e)]

**Guided Bend Test Results**

| Type | Results | Type | Results |
|---|---|---|---|
| One Face Bend | One Face Bend - Acceptable | | |
| One Root Bend | One Root Bend - Acceptable | | |

Note 1: Diameters Qualified: Groove Welds Qualified 0.500" O.D. and Over, Qualified Unlimited Diameters for Fillet Welds.
Note 2: Thickness Qualified: Groove welds; Thru .080" Deposit Thickness with the GTAW Welding Process. Fillet Welds: Qualified Thru Unlimited Thickness Weld Deposit for the GTAW Welding Process.

Fillet Weld - Fracture test (QW-181.2): N/A  Length and Percent of Defects: N/A

[ ] Fillet Welds in Plate [QW-462.4(b)]  [ ] Fillet Welds in Pipe [QW-462.4(c)]

Macro Examination (QW-184): N/A  Fillet Leg Size (in.): N/A in. X N/A in. Concavity/Convexity (in.): N/A

Alternative Radiographic Examination Results (QW-191): N/A

Radiographic Film or Specimens Evaluated By: N/A  Company: N/A

Mechanical Tests Conducted by: Calumet Testing Services  Laboratory Test No.: CTS Job No. 14515

Welding Supervised By: Simon Sorsher

We certify that the statements in this record are correct and that the test coupons were prepared, welded, and tested in accordance with the requirements of Section IX of the ASME Code.

Manufacturer or Contractor: Hi-Tech Manufacturing

Date: July 29, 2009  By: _____