REV	DESCRIPTION	DRAWN / APPROVED	DATE
---	NEW RELEASE - ER #7671	DVM	7/6/04
		M. FOLEY	7/7/04
A	ECO #7993: CHANGED NOTE 2 TO ALLOW FOR VENDOR FAB. PREFERENCE	DVM	8/2/05
		M. FOLEY	8/2/05
B	ECO #8803: PICTORAL UPDATE ONLY. FORMTEIL SHORTENED.	C. GRIMM	9/24/07
		D. MITCHELL	9/24/07

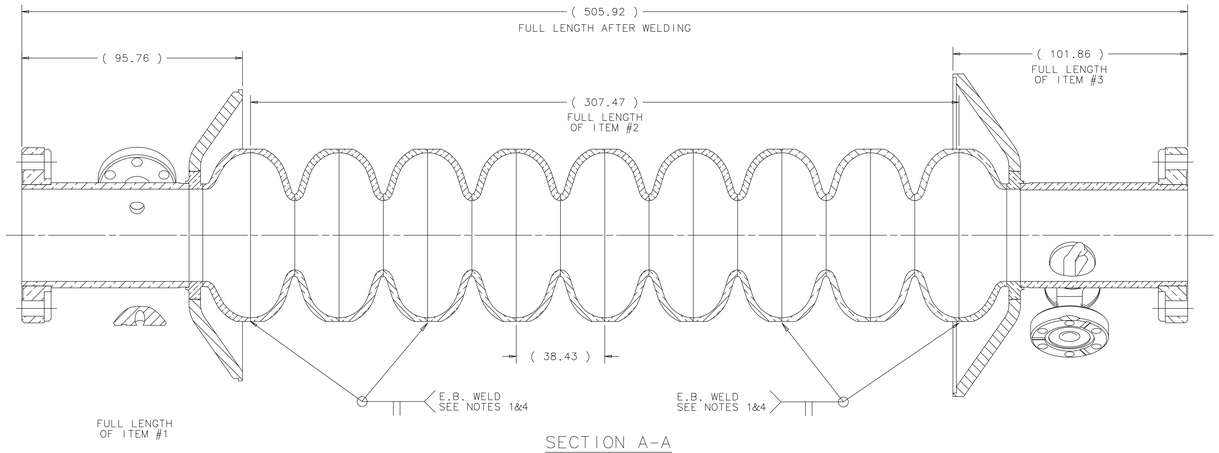

SECTION A-A

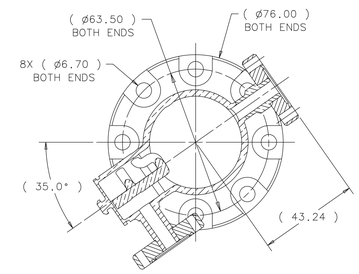

SECTION C-C

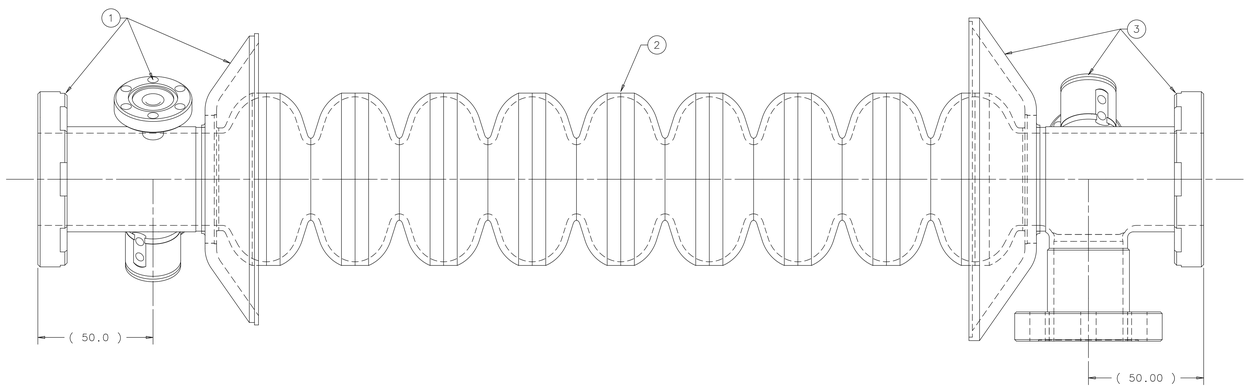

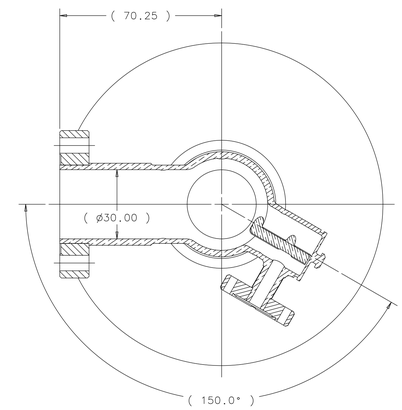

SECTION B-B

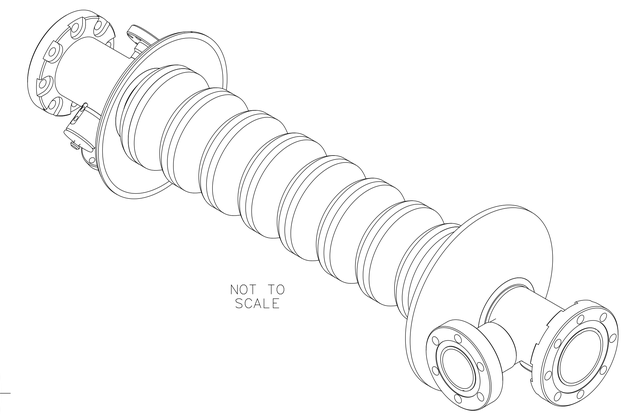

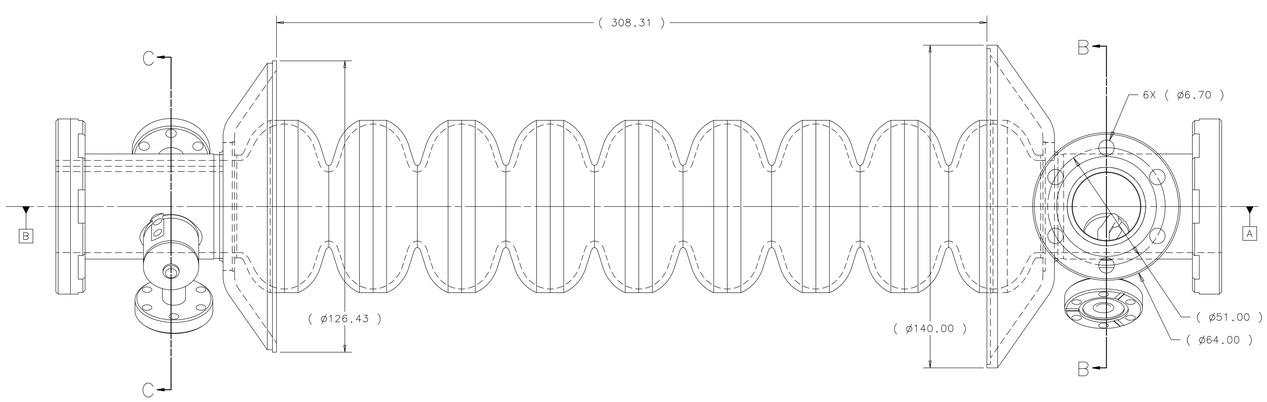

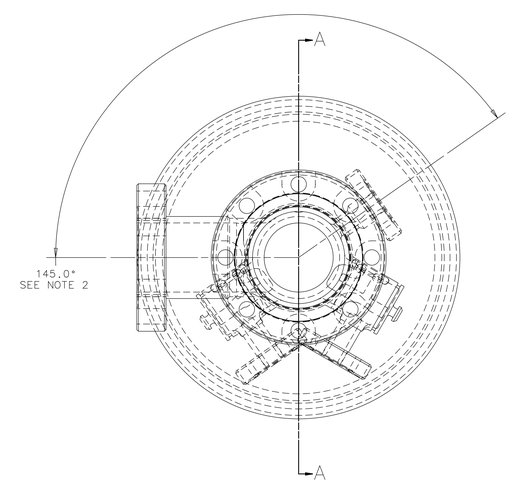

NOTES:

1. ALL ELECTRON BEAM WELDING, ACID ETCHING, CLEANLINESS, AND HANDLING ARE DETAILED IN ES-426451 AND MUST BE FOLLOWED.
2. INSURE THAT THE CLOCKING OF THE ø76.00 END FLANGES ARE HELD TO ±0.5°.
3. ITEMS #1, #2, AND #3 MUST BE HELD CONCENTRIC TO EACH OTHER TO ±ø0.08mm ALONG DATUMS A & B.
4. DUE TO VARYING FABRICATION PROCEEDURES, THE VENDOR MAY CHOOSE THE DUMBBELL WELDING SEQUENCE BEST SUITED FOR THEIR PROCESS, TOOLING, AND FACILITY.
5. THIS DEVICE IS EASLIY DEFORMED. A HANDLING FIXTURE IS REQUIRED FOR ALL HANDLING AND SHIPPING.
6. ALL UNITS ARE IN MILLIMETERS.

ITEM	PART NO.	DESCRIPTION OR SIZE	QTY.
3	MD-426323	END TUBE WITH MC, FAB PROCESS	1
2	MD-426330	DUMBBELL WELDMENT, FULL	1
1	MD-426332	END TUBE W/O MC, FAB PROCESS	1

PARTS LIST

UNLESS OTHERWISE SPECIFIED					
.XX	.XXX	X°	ORIGINATOR	T. KHABIBOULLINE	OCT 2003
± N/A	± N/A	±0.5°	DRAWN	D. MITCHELL	7/6/04
			CHECKED		
			APPROVED	M. FOLEY	7/7/04

1. BREAK ALL SHARP EDGES .02 MAX.
2. DO NOT SCALE DRAWING.
3. DIMENSIONS BASED UPON ASME Y14.5M-1994
4. MAX. ALL MACH. SURFACES √
5. DRAWING UNITS: METRIC

USED ON: 5520-ME-426247

MATERIAL: PER ITEM WELDMENT

FERMI NATIONAL ACCELERATOR LABORATORY
UNITED STATES DEPARTMENT OF ENERGY

SCRF 3.9 GHZ 3RD HARMONIC NIOBIUM CAVITY ASSEMBLY CAVITY WELDMENT, Nb, 9 CELL

SCALE	DRAWING NUMBER	SHEET	REV
1:1	5520.000-ME-426321	1 OF 1	B

CREATED WITH : GROUP:USER NAME: dmitchel