Technical Specification
For
Cryomodule ACC39 Interfaces
To the
DESY Cryo Module Test Bench (CMTB)
And
TTF/FLASH

Prepared by:	P. Pfund	Date:
Prepared by:	C. Grimm	Date:
Reviewed by:	H. Carter	Date:
Approved by:	H. Edwards	Date:

TABLE OF CONTENTS

1. SCOPE 3

2. GENERAL CONFIGURATION 3

3. BEAM LINE 6

4. INPUT COUPLERS 8

4.1. FIELD PROBES 8
4.2. TEMPERATURE SENSORS 9
4.3. SPARK DETECTOR 10
4.4. WAVE GUIDE 11
4.5. COUPLER VACUUM 12

5. HOM COUPLERS 12

6. TUNERS 13

7. INSTRUMENTATION 13

7.1. CRYOGENIC PIPE TEMPERATURES 13
7.2. HELIUM VESSEL TEMPERATURES 13
7.3. HOM TEMPERATURES 14
7.4. COUPLER TEMPERATURES 14
7.5. SHOCK AND VIBRATION 14

8. CRYOGENIC PIPING 15

8.1. PIPING INTERFACES WITH THE CMTB 15
8.2. PIPING INTERFACES WITH TTF/FLASH 17
8.3. "AS-BUILT" PIPE POSITIONS 21

9. CRYOMODULE SUPPORT 22

9.1. BOTTOM SUPPORTS 23
9.2. LIFTING POINTS 25
9.3. VACUUM BELLOWS 26

10. ALIGNMENT POINTS 28

11. FEED THROUGH DETAILS 29

12. REFERENCES 40

1. SCOPE

Fermilab has designed and fabricated a 3.9 GHz cryomodule, Figure 1.1, to be shipped to DESY. The DESY designation for this cryomodule is ACC39. This document specifies the external interfaces between ACC39 and the installation at DESY, first in the Cryomodule Test Bench (CMTB) and then in TTF/FLASH.

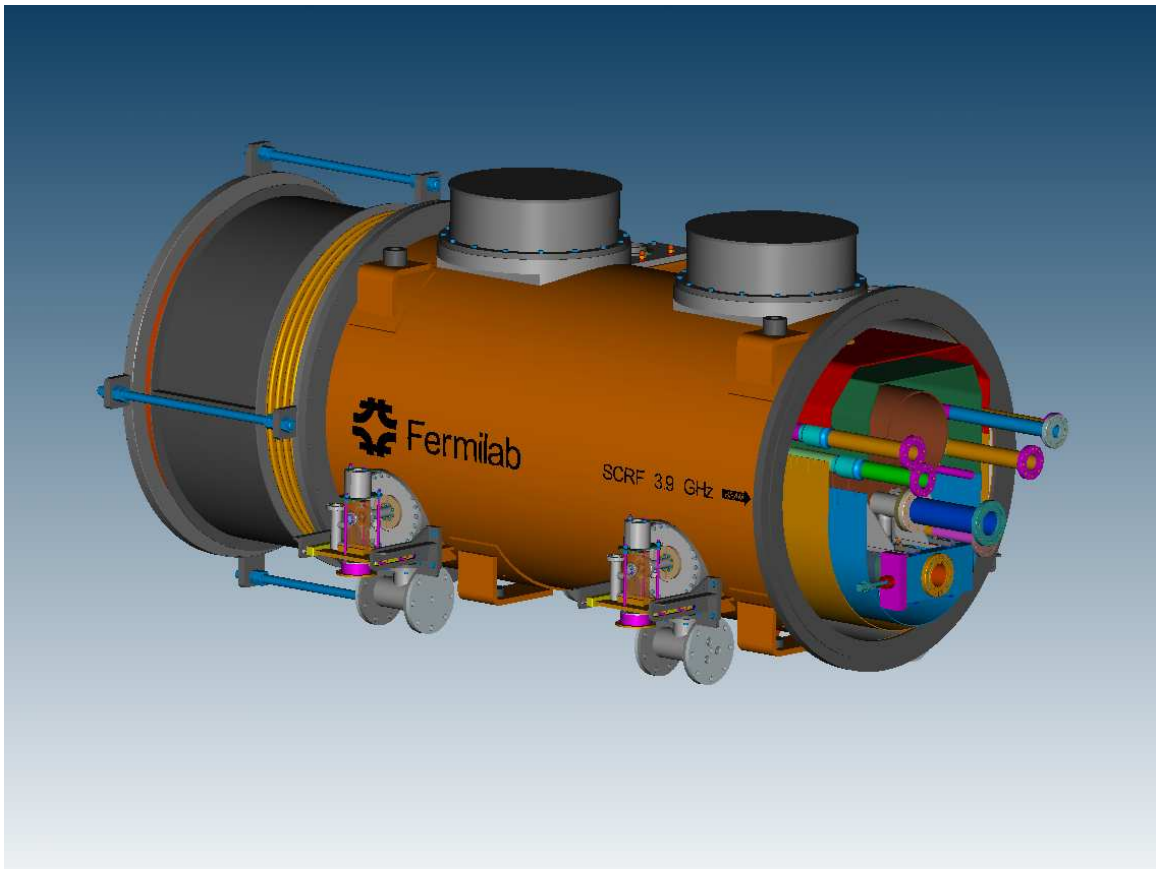

Figure 1.1 The Third Harmonic (3.9 GHz) Cryomodule ACC39.

2. GENERAL CONFIGURATION

An elevation view of the right side, when looking downstream, of ACC39 is shown in Figure 2.1. The beam direction is indicated by the arrow on the side of the module. In the figure are shown: the coupler ports nos. 1 and 3 associated with the two right-side

cavities C1.ACC39 and C3.ACC39, the two right-side support feet, feed through ports associated with the two right-side cavities, and the two cold mass support ports on the top of the module. The cold mass is fixed longitudinally to the "upstream" cold mass support port. It is designed to slide longitudinally under thermal contraction at the "downstream" support.

The beam line is located 274.7 mm above the bottom of the support pads. Each of the support pads is equipped with a threaded "foot". This is discussed in more detail in Section 9.

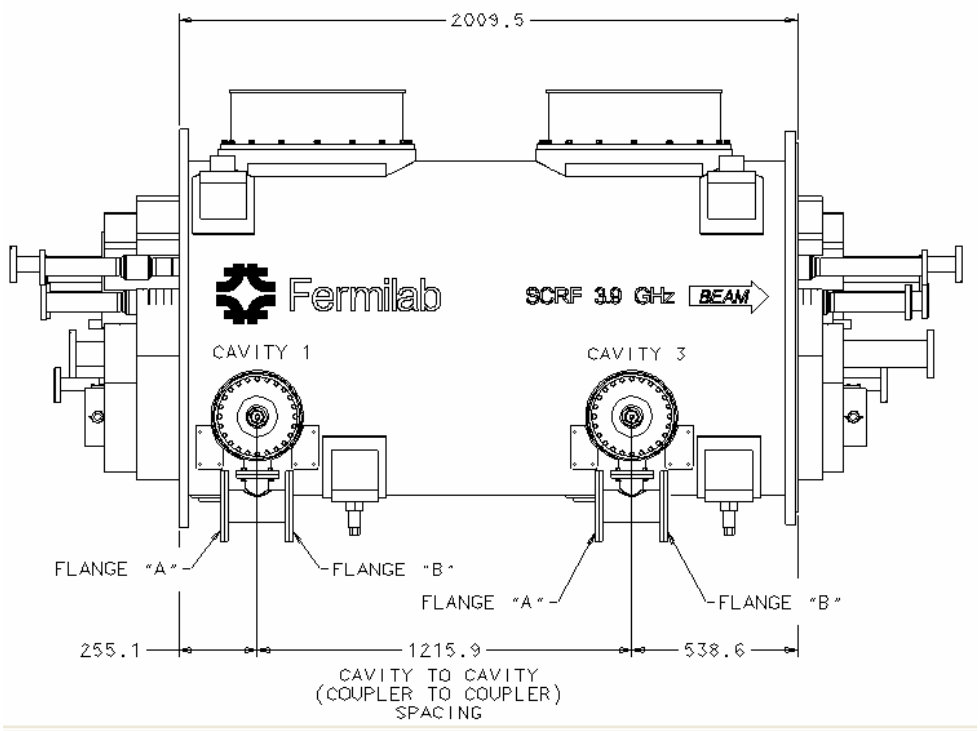

Figure 2.1 Right-side Elevation View of ACC39.

Figure 2.2 shows the left-side view of ACC39 when looking downstream. The beam direction is indicated by the arrow on the side of the module. In the figure are shown: the coupler ports nos. 2 and 4 associated with the two left-side cavities C2.ACC39 and

C4.ACC39, the two left-side support feet, feed through ports associated with the two left-side cavities, and the two cold mass support ports on the top of the module.

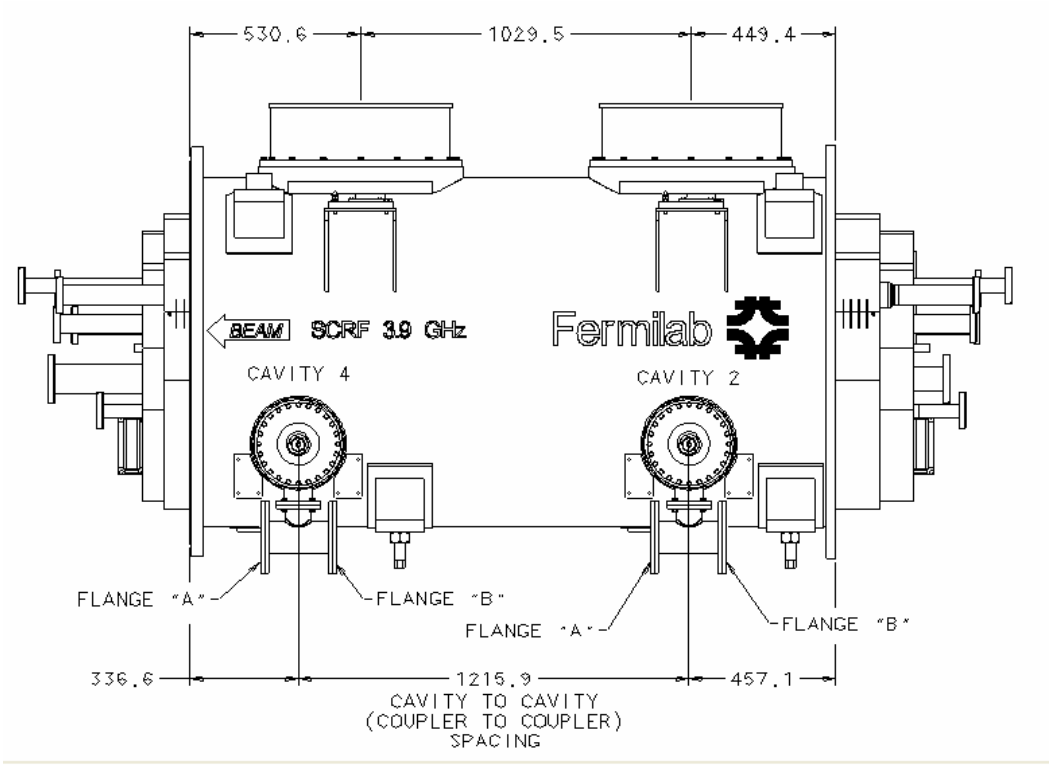

Figure 2.2 Left-side Elevation View of ACC39.

The origin of the overall x-y-z coordinate system for the module is located on the beam line at the upstream flange of cavity #1. When facing downstream, x is positive to the left, y is positive upward and z is positive downstream. The warm z positions of key module features are listed in Table 2.1 below.

Table 2.1 Z-positions of key module features.

Feature or Item	**Z – Position (mm)**
Upstream Gate Valve Flange	-102.5
Cavity 1 (C1.ACC39) Upstream Flange	0.0
Vacuum Vessel Flange	200.8
Upstream Support (left)	341.7
Coupler 1	455.9

Coupler 2	657.9
Upstream Support (right)	772.1
Downstream Support (left)	1557.6
Coupler 3	1671.8
Coupler 4	1873.8
Downstream Support (right)	1988.0
Vacuum Vessel Flange	2210.4
Downstream Gate Valve Flange	2432.2

3. BEAM LINE

The beam line is back-filled with argon gas at 50 mbar gauge and 67 F after cavity string assembly in the class 10 clean room. The beam line is terminated at each end of the cryomodule with a gate valve. Figure 3.1 shows the axial location of the flange face on each gate valve. The bolt pattern on each gate valve flange is shown in Figure 3.2.

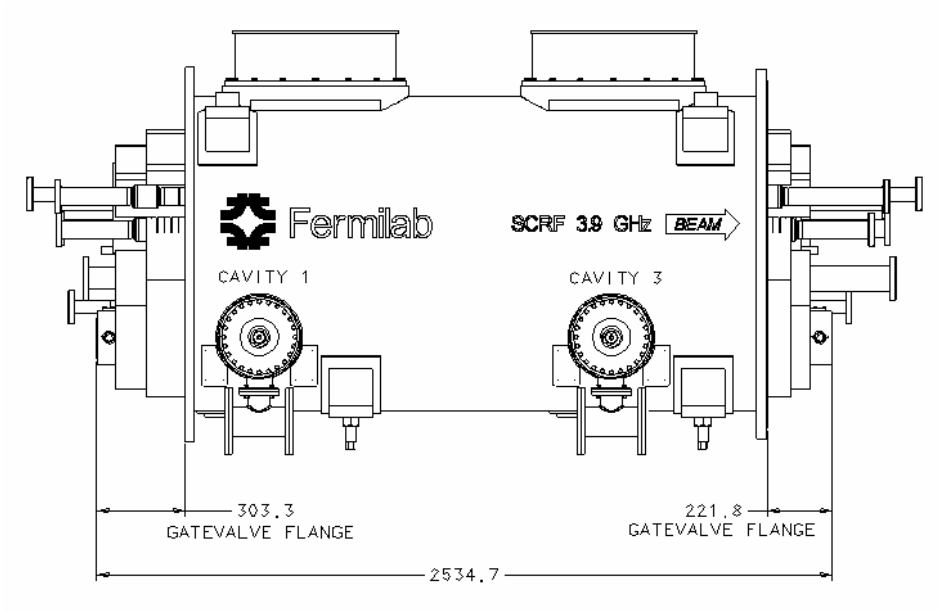

Figure 3.1 Beam line gate valve flange locations.

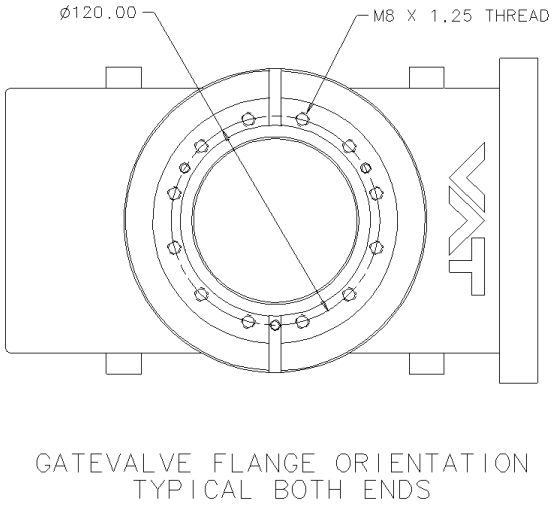

Figure 3.2 Beam line gate valve flange.

Upstream valve model / serial no. 470XX-XE01-AAW2 / 0001.

Downstream valve model serial no. 470XX-XE01-AAW2 / 0002.

4. INPUT COUPLERS

One of the four input couplers is shown in Figure 4.1.

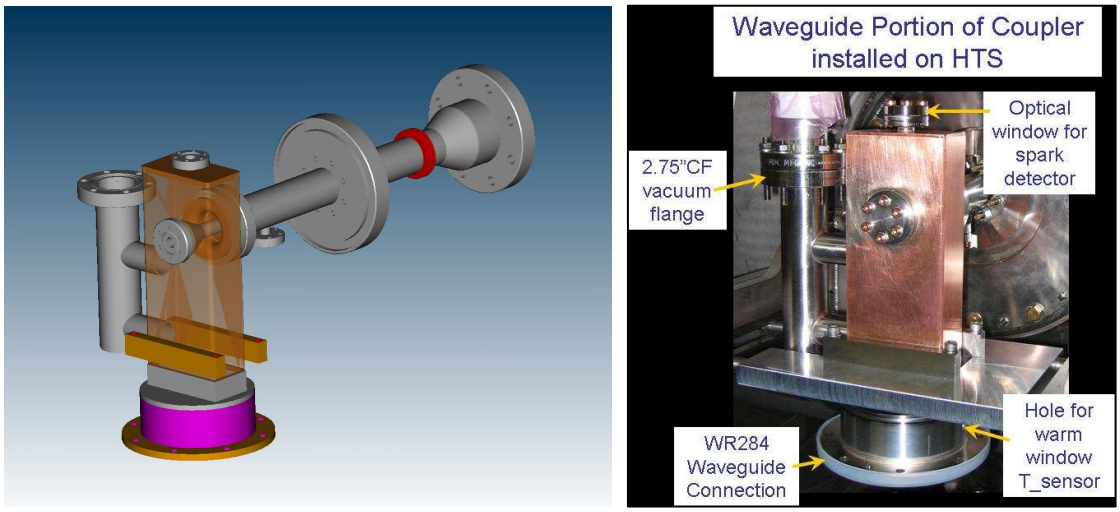

Figure 4.1. Input Coupler

4.1. Field Probes

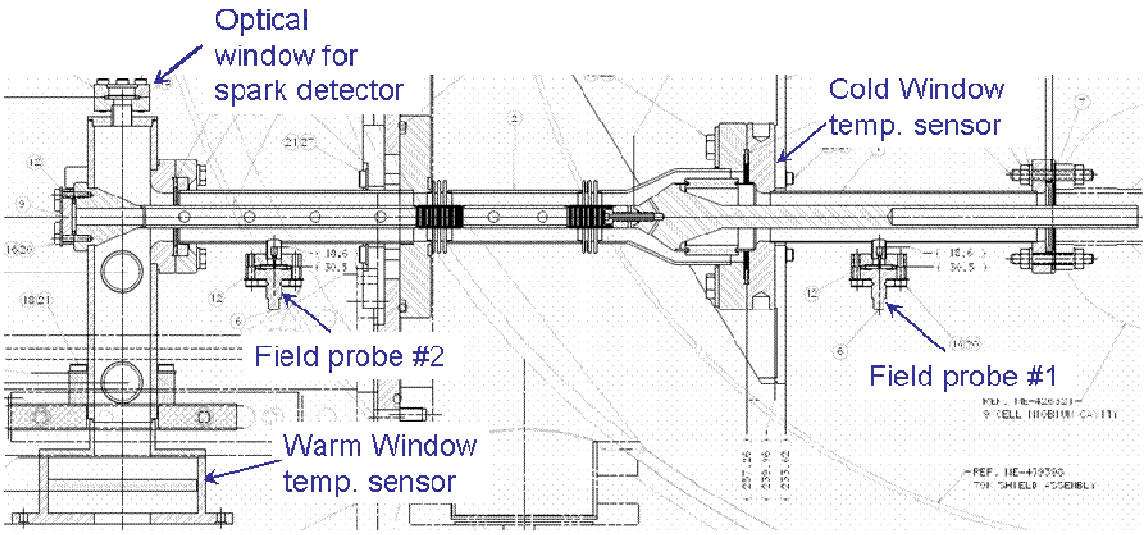

Figure 4.2. Field probes in the Coupler.

Figure 4.2 shows a section of the input coupler as installed on a cavity. Each input coupler includes two field probes. One is located inside the cryomodule, labeled Field Probe #1 in the figure, and the second, labeled Field Probe #2, is accessible on the warm end portion of the coupler outside the vessel. The cable for Field Probe #1 is routed through the Flange B. The details are in Section 11. The cable for Field Probe #2 is connected from the outside of the cryomodule.

4.2. Temperature Sensors

Each coupler includes three temperature sensors. Two 1000-Ohm platinum RTD (PT1000) sensors are installed on the back side of the 80K flange of the coupler's cold end to monitor cold window temperature, Figure 4.3. The cables for these sensors are routed through the center feed through on Flange B. The details of this connection are in Section 11.

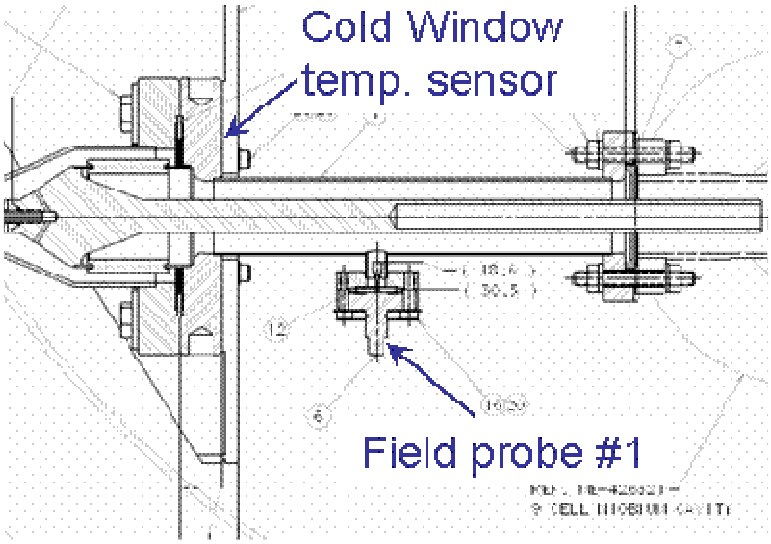

Figure 4.3 (excerpted from Figure 4.2) Temperature Sensor on Cold Window

A second PT1000 RDT is inserted into a 3.1 to 3.2mm diameter blind hole on the flange connection between the waveguide and the warm end assembly to monitor heating of the warm window. See Figure 4.4.

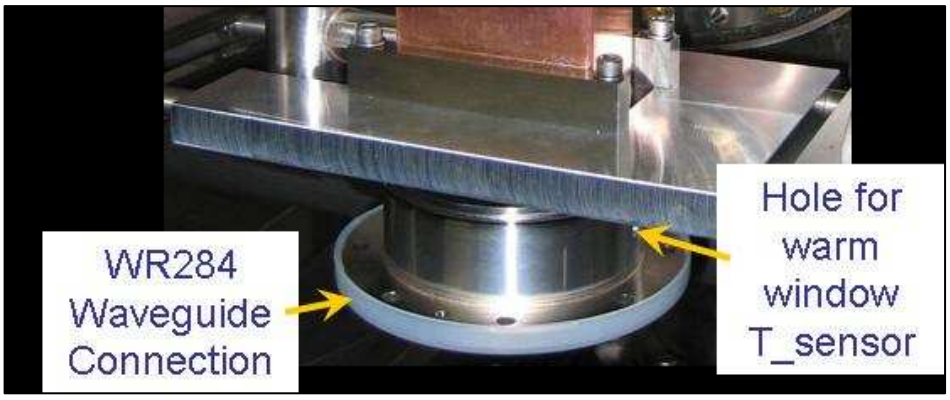

Figure 4.4 (excerpted from Figure 4.1) Temperature Sensor on Coupler Waveguide

4.3. Spark Detector

A 1.33 in Conflat window flange on the coupler's warm end assembly, as shown in Figure 4.5, is provided for connection of a PM tube. This allows spark detection in the vacuum volume between the coupler's two ceramic RF windows. The window flange is equivalent to a MDC Vacuum Products part no. 450000 (Figure 4.6).

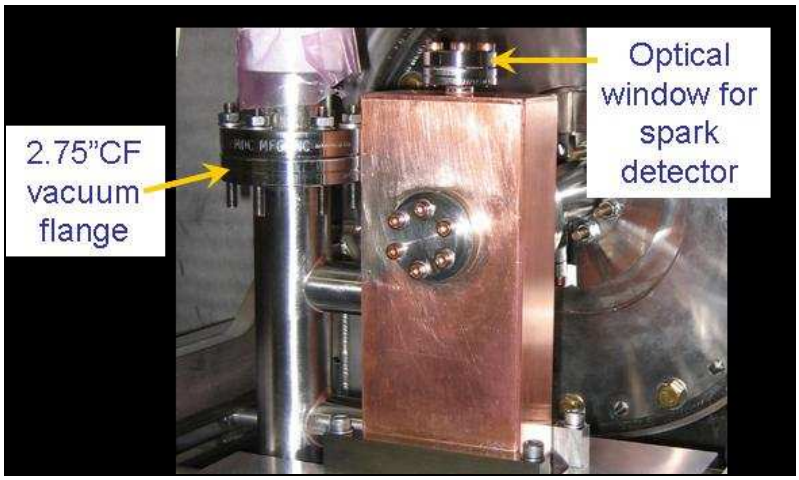

Figure 4.5 (excerpted from Figure 4.1) Location for Spark Detector

For the 1.33 in Conflat window flange:

- Window thickness = 0.070 in (1.78 mm)
- View diameter = 0.62 in (15.75 mm)
- H = 0.285 in (7.24 mm)
- Bolt circle = 1.062 in (26.98 mm)
- Flange OD = 1.33 in (33.78 mm)

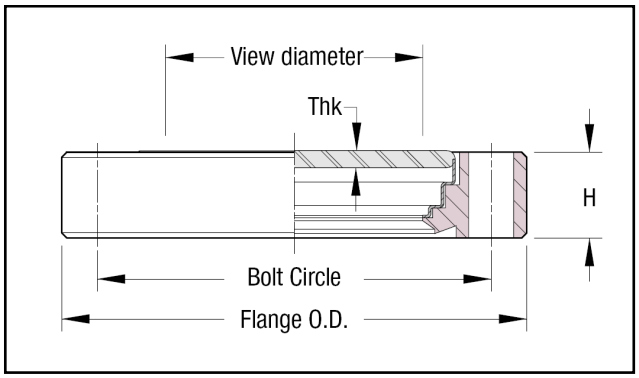

Figure 4.6 Detail of mini-Conflat window flange for warm end spark detector

4.4. Wave Guide

The wave guide is WR284. The connecting flange on the coupler mates to a standard UG53/U connection.

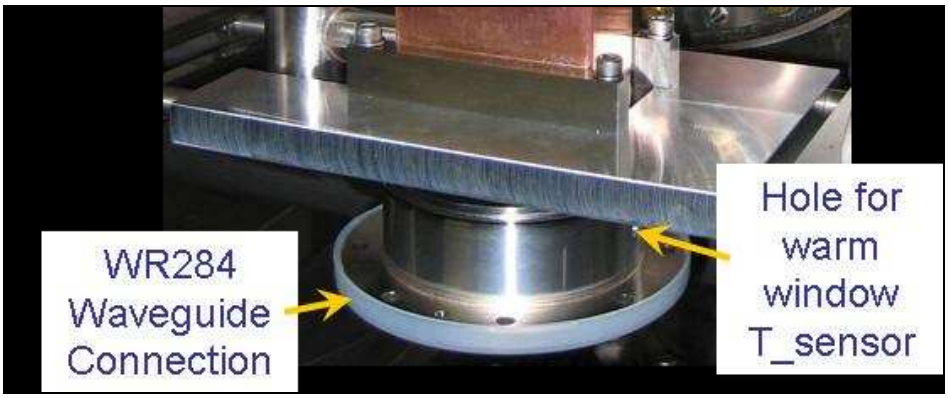

Figure 4.7 (excerpted from Figure 4.1) Waveguide Connection

4.5. Coupler Vacuum

DESY will supply a vacuum header to be attached to each of the four couplers. The 2.75 in CF vacuum flange can be seen in Figure 4.1.

5. HOM COUPLERS

There are two HOM couplers per cavity. The output signal cabling interfaces are detailed in Section 11.

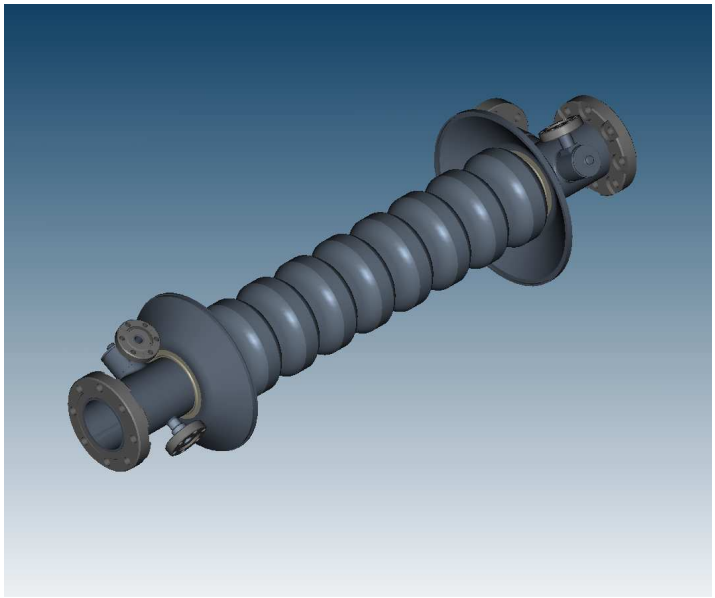

Figure 5.1. ACC39 Cavity

6. TUNERS

Each cavity has a slow tuner driven by a stepper motor. The pin assignments are detailed in Section 11. No fast tuners are installed on the cavities.

7. INSTRUMENTATION

7.1. Cryogenic Pipe Temperatures

DESY has specified [reference 1] that no temperature sensors need to be installed on the cryogenic piping.

7.2. Helium Vessel Temperatures

The temperature of each of the helium vessels is measured with an RTD. The sensor is located as shown in Figure 7.1. External cabling interfaces for the helium vessel temperature sensors are detailed in Section 11.

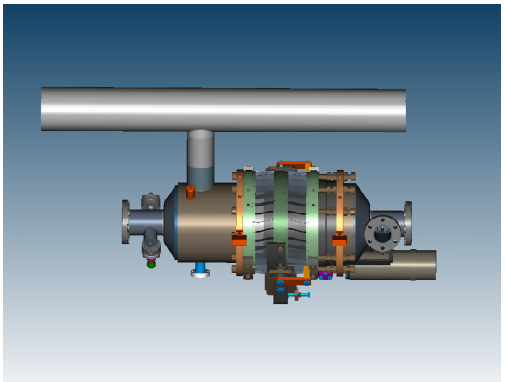

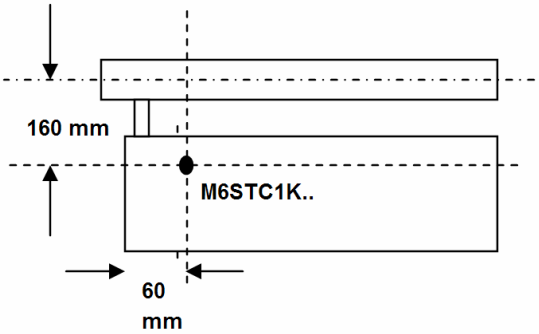

Figure 7.1 Location of temperature sensor on the outside of cavity helium vessel

7.3. HOM Temperatures

Three temperature sensors are planned for each HOM. One on the flange, one on the knob and one on the can ("top hat"). External cabling interfaces for the HOM temperature sensors are detailed in Section 11.

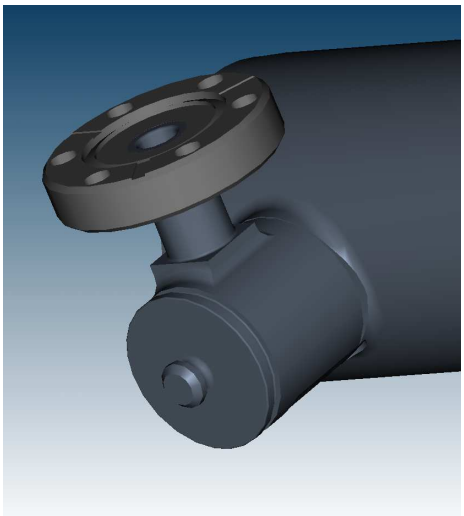

Figure 7.2. HOM

7.4. Coupler Temperatures

Coupler temperatures are discussed in Section 4.2.

7.5. Shock and Vibration

The module will be fitted with several shock and vibration sensors. The data will be recorded during transport to confirm that the module has not been subjected to excessive

shocks or vibration. No operational vibration measurements are required. Consequently the sensors leads are temporarily routed through the transportation end caps and not through vacuum vessel feedthrough flanges A and B.

8. CRYOGENIC PIPING

The cryogenic piping is analyzed in detail in the Cryogenic Piping Engineering Note [reference 2]. The nominal pipe positions are discussed in sections 8.1 and 8.2 below. The "as-built" pipe positions as determined by survey are presented in section 8.3 below.

8.1. Piping Interfaces with the CMTB

The module is supplied with flanges on the ends of the cryo-pipes to attach at the CMTB.

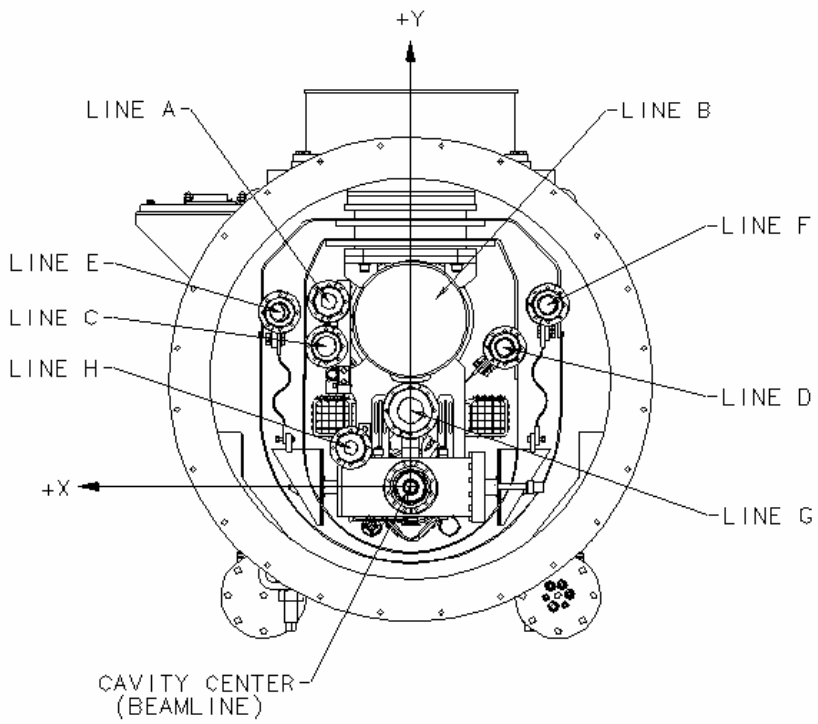

Figure 8.1. Upstream (bellows) end of cryomodule showing coordinate system.

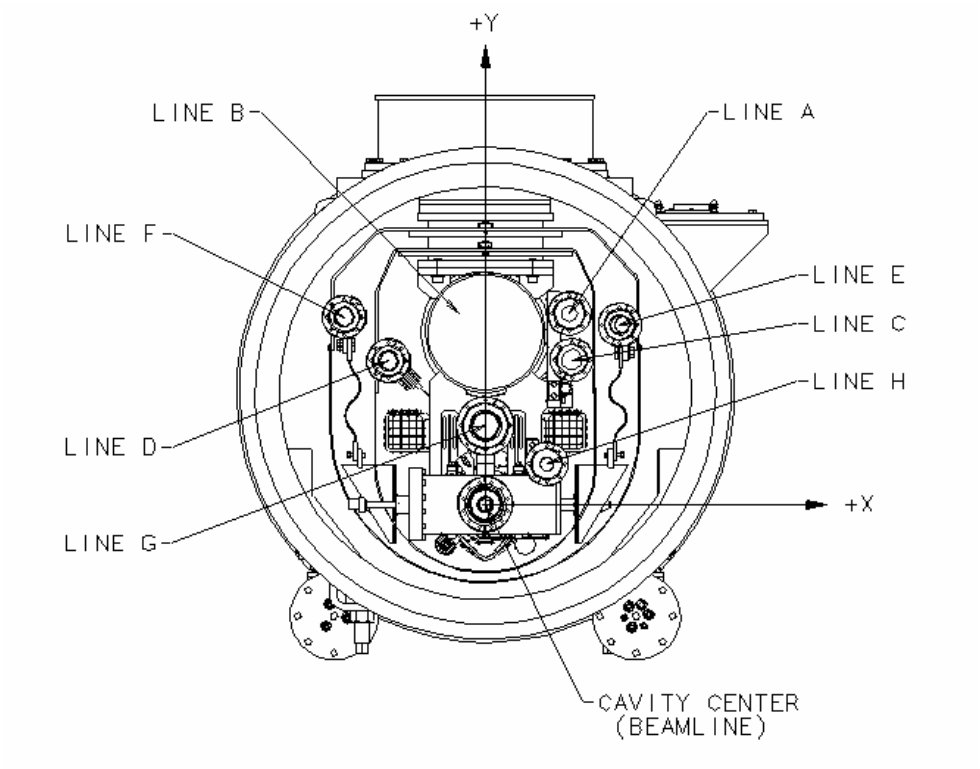

Figure 8.2. Downstream (non-bellows) end of cryomodule.

Table 8.1 Cryogenic Pipe coordinates for CMTB installation

Line	Description	X (mm)	Y (mm)	Z (mm) (upstream)	Z (mm) (downstream)	Flange
A	2 K Supply	219.0	496.0	-345.8	2743.8	DN63CF
B	He Return	0.0	447.0	-74.3	2374.6	Custom
C	4 K Supply	225.5	376.0	-235.8	2634.3	DN63CF
D	4 K Return	-252.0	373.0	-246.4	2579.3	DN63CF
E	70 K Supply	350.0	467.0	-245.8	2625.8	DN63CF
F	70 K Return	-367.0	487.0	-251.1	2632.1	DN63CF
G	Two-phase He	0.0	204.6	-152.8	2653.6	DN100CF
H	Warm-up	160.0	105.0	-202.8	2500.6	DN63CF

Note 1: The origin of the x-y-z coordinate system is located on the beam line at the upstream flange of cavity C1.ACC39.
Note 2: The upstream and downstream Z-positions of the pipes are to the face of the flanges.
Note 3: The Z-position of the upstream vacuum flange is 200.8 mm. The Z-position of the downstream vacuum flange is 2210.4 mm.

For installation in the CMTB the cryogenic pipes are connected by means of the flanges at the end of each pipe (Table 8.1). The flange on Line B (Table 8.1 and Figure 8.3,

center) will be connected by means of mechanical clamps to a transition piece which mates to the CMTB low pressure pipe (Figure 8.3, left).

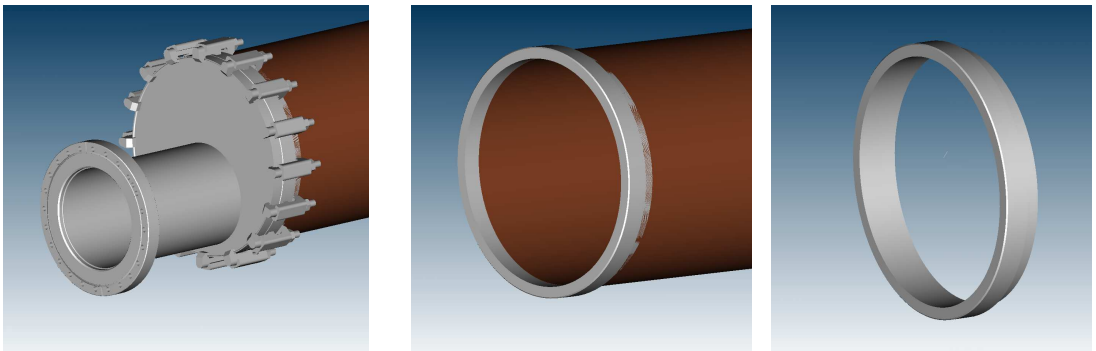

Figure 8.3 End connection for Line B, Helium Gas Return Pipe

8.2. Piping Interfaces with TTF/FLASH

As in the case of the CMTB, the flange on Line B will connected by means of mechanical clamps to a transition piece which mates to the FLASH 168.3 x 2 mm 30 mbar low pressure pipe. The DN100CF flange on Line G will also remain. For the other cryogenic pipes, the flanges are removed from the end of each pipe. The location of each cut is determined by DESY to match the TTF/FLASH pipes. Each ACC39 pipe is long enough to accommodate the required length. The thermal shield pipes have aluminum-to-stainless transitions. These transitions have been located far enough away from the ends to provide adequate length between the cut point and the transition. Mechanical loads on the pipes are analyzed in Reference 3.

Table 8.2 Cryogenic pipe thermal contractions

Line	Cryogenic Line	Material	US Std Pipe	Length (mm)	Contraction (mm)
A	2K Supply	SS 316L	1 ½” – 5S	3089.6	9.3
B	He Gas Return	SS 316L		2448.9	7.3
C	4 K Supply	SS 316L	2” – 10S	2870.1	8.6
D	4 K Return	AL 6061-T6	2” – 80S	2825.7	8.5
E	70 K Supply	AL 6061-T6	2” – 80S	2871.6	11.5
F	70 K Return	AL 6061-T6	2” – 80S	2883.2	11.5
G	Two-phase He	Titanium	3” – 10S	2806.4	-
H	Warm-up	SS 316L	1 ¼” – 10S	2703.4	8.1

Note 1: The lengths of the pipes include the flanges.
Note 2: The cold mass is fixed at the upstream cold mass support. Approximately 30% of contraction is taken at the upstream end and 70 % at the downstream end.
Note 3: Line G has bellows between each cavity and the contraction is closer to that of the Invar rods that fix the longitudinal location of the cavities.

Table 8.3 Cryogenic pipe-end characteristics

Line	Cryogenic Line	DESY Pipe OD (mm)	DESY Pipe Wall (mm)	US Std Pipe	ACC39 OD (mm)	ACC39 Wall (mm)
A	2K Supply	48.3	1.65	1 ½" - 5S	48.3	1.65
B	He Gas Return	168.3	2	DESY flange	311.0	6.00
C	4 K Supply	60.3	2.77	2" – 10S	60.3	2.77
D	4 K Return	60.3	2.77	2" – 10S	60.3	2.77
E	70 K Supply	60.3	2.77	2" – 10S	60.3	2.77
F	70 K Return	60.3	2.77	2" – 10S	60.3	2.77
G	Two-phase He	76.1	2	3" – 0.083" tube	88.9	3.05
H	Warm-up	42.2	1.65	1 ¼" – 5S	42.2	1.65

Note 1: The DESY pipe OD and wall are taken from Reference [4].
Note 2: Lines B and G are connected by flanges. They are not butt-welded together as in the case of the other lines.
Note 3: Line H is schedule 10 with schedule 5 extensions to match the corresponding DESY pipes.

Figures 8-4 through 8-8 show the layouts of lines A, C, D, E, F, and H. These are the lines on ACC39 for which the flange fittings on the pipe ends are to be removed and varying lengths of pipe cut off for attachment to ACC1 and the endcap in FLASH. In each figure the positions of the flanged ends of the ACC39 pipes with respect to the pipe ends of ACC1 and the FLASH endcap are shown. The ACC1 and endcap values are taken from the model provided by DESY.

Each figure also indicates the Z-position of the 4 K thermal shield and, in some cases, the 70 K thermal shield. These shields are shown because they represent partial obstructions to cutting and welding the pipes and hence the locations of the attachment to FLASH would best be outside of these shields.

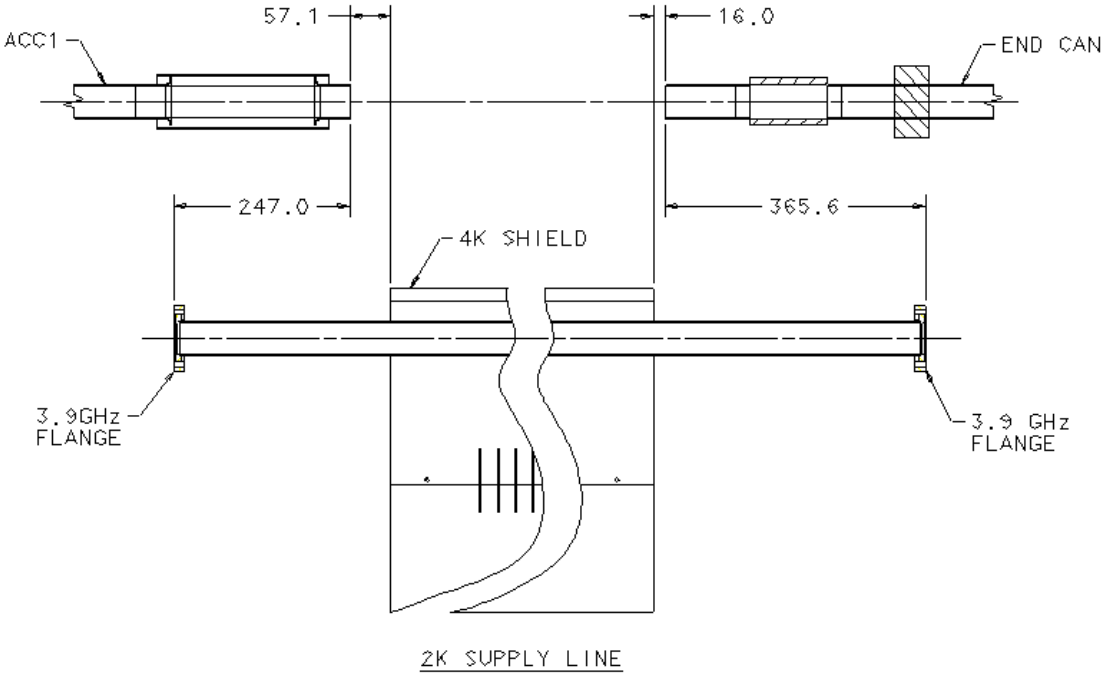

Figure 8-4 Line A – 2 K Supply

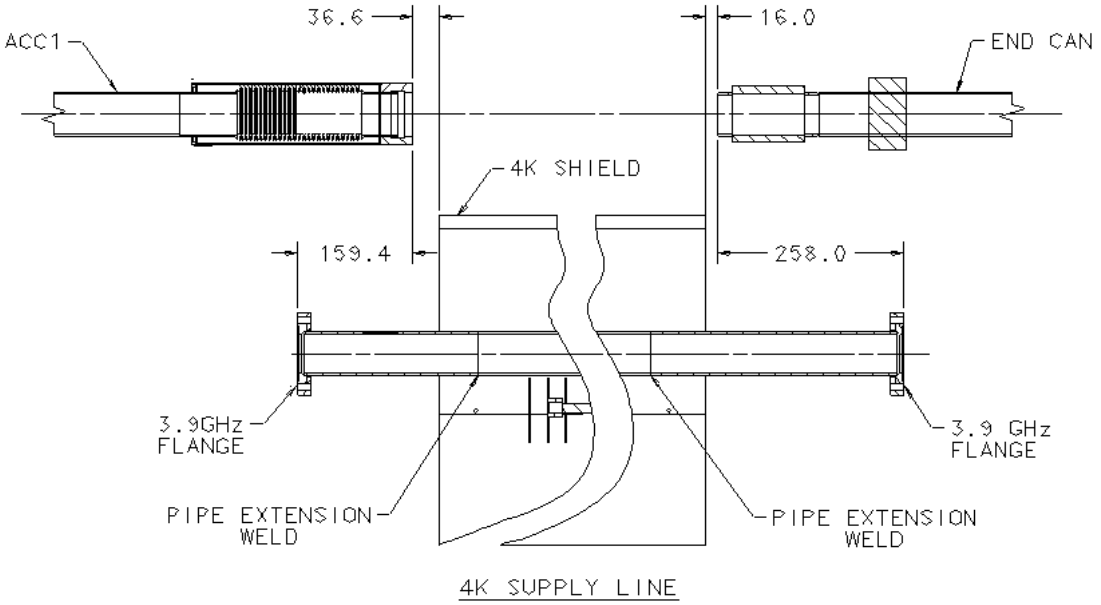

Figure 8-5 Line C – 4 K Supply

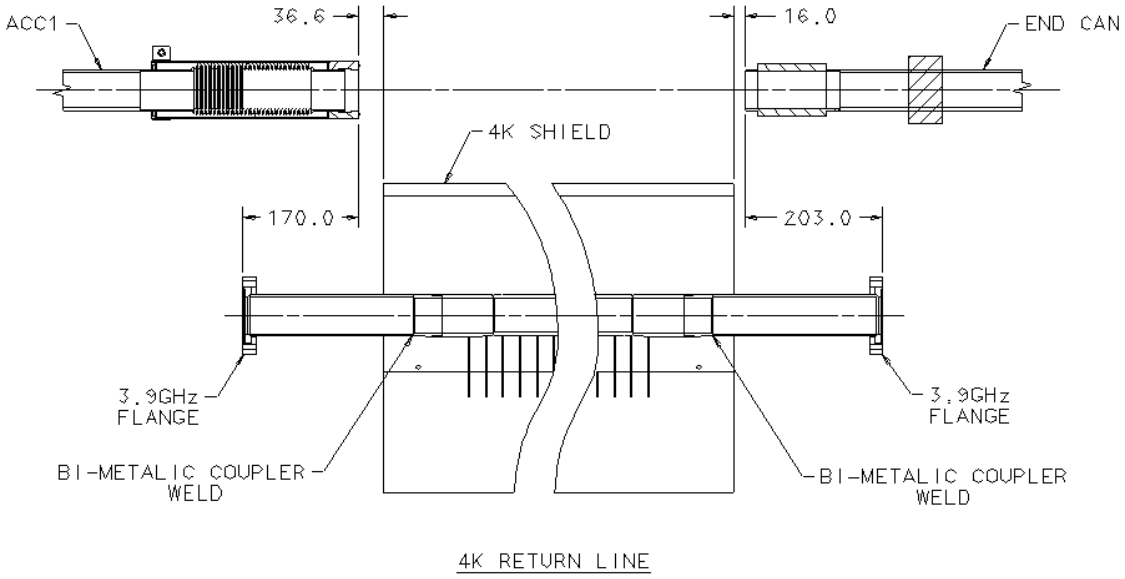

Figure 8-6 Line D – 4 K Return

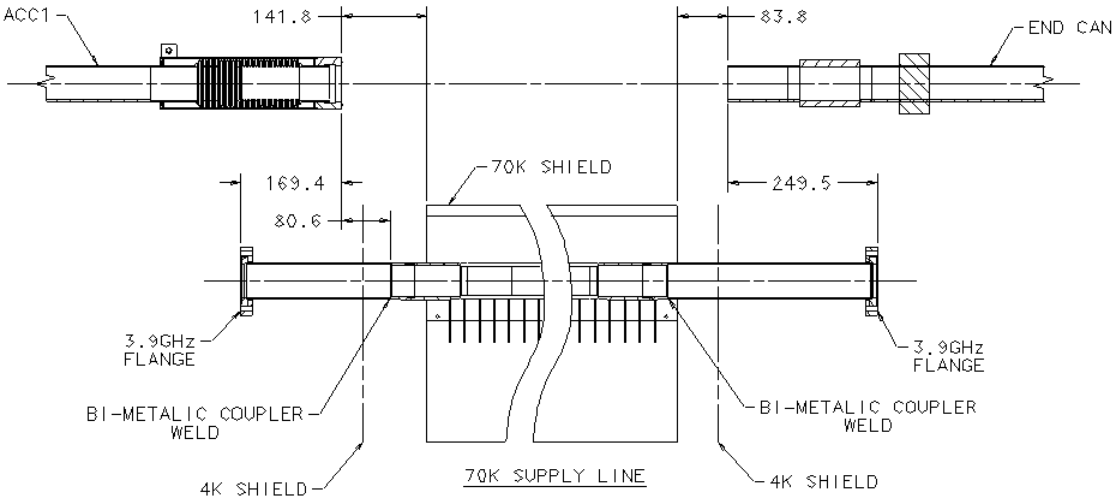

Figure 8-7 Line E – 70 K Supply

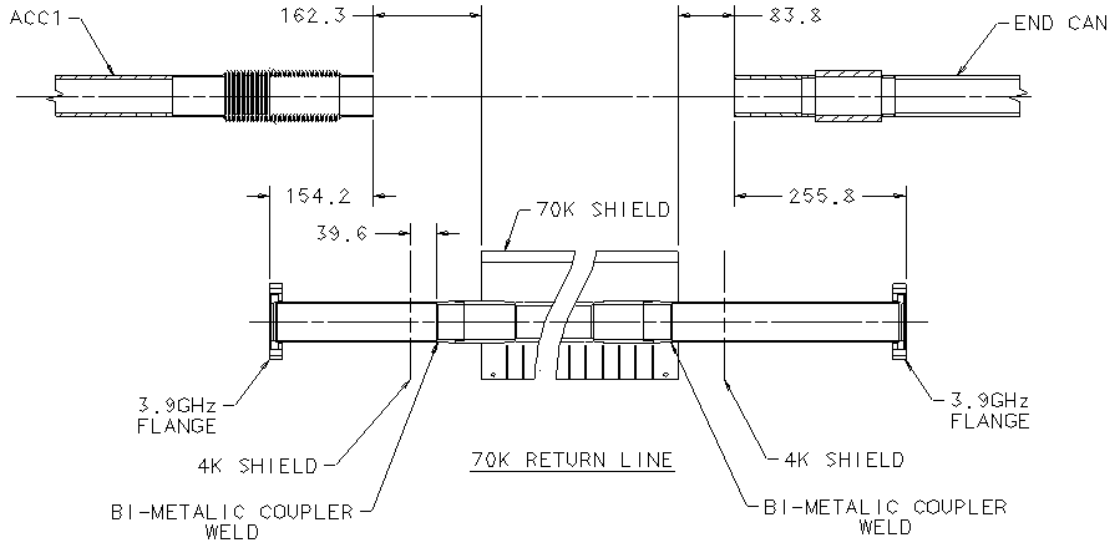

Figure 8-8 Line F – 70 K Return

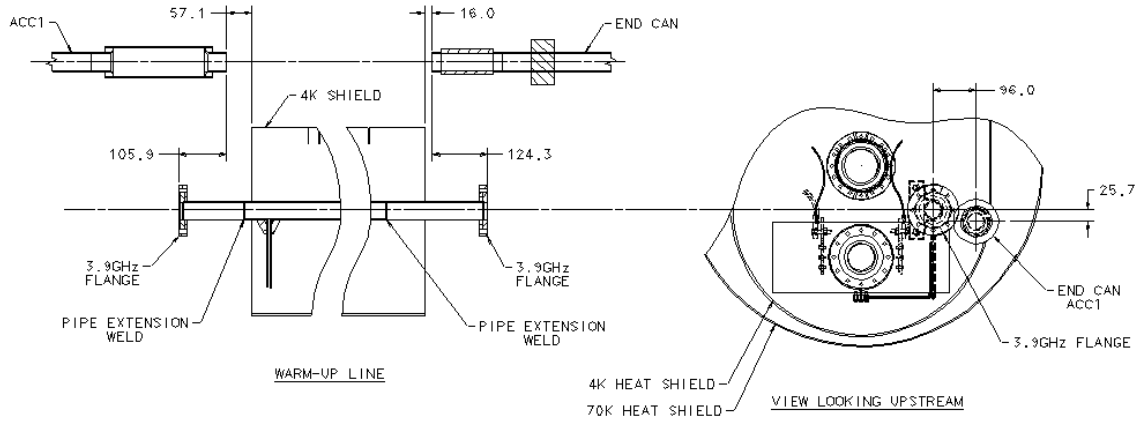

Figure 8-9 Line H – Warm-up Line

Figure 8-9 shows both a side view and an end view for the position of line H. The end view shows the relative displacement between line H in ACC39 and in ACC1/endcap. This relative displacement was acknowledged early in the design and a suitable interconnect will be developed by DESY.

8.3. "As-built" Pipe Positions

The pipe locations were surveyed at both the upstream (Table 8.4) and downstream (Table 8.5) locations.

Table 8.4 Upstream "as-built" pipe positions

Line	Description	X Design (mm)	X Actual (mm)	Y Design (mm)	Y Actual (mm)	Z Actual (mm)
A	2 K Supply	219.0	223.133	207.0	205.297	-566.849
B	He Return	0.0	-1.905	158.0	157.817	-299.726
C	4 K Supply	225.5	225.836	87.0	87.053	-435.471
D	4 K Return	-252.0	-250.183	84.0	86.209	-451.421
E	70 K Supply	350.0	358.609	178.0	179.604	-452.851
F	70 K Return	-367.0	-375.559	198.0	196.312	-455.700
G	Two-phase He	0.0	1.727	-85.0	-89.280	-372.422
H	Warm-up	160.0	165.977	-184.0	-182.164	-423.597
Beam	Gate Valve Flange	0.0	-0.045	-289.0	-288.468	-318.223

Note 1: The origin of the x-y-z coordinate system is located on the vacuum vessel flange at the upstream end.
Note 2: The Z coordinate is positive in the downstream direction. Looking downstream, the X coordinate is positive to the left and the Y coordinate is positive up.
Note 3: The upstream and downstream Z-positions of the pipes are to the face of the flanges.

Table 8.5 Downstream "as-built" pipe positions

Line	Description	X Design (mm)	X Actual (mm)	Y Design (mm)	Y Actual (mm)	Z Actual (mm)
A	2 K Supply	219.0	217.110	207.0	209.678	2519.533
B	He Return	0.0	1.702	158.0	158.484	2149.853
C	4 K Supply	225.5	224.275	87.0	90.122	2432.811
D	4 K Return	-252.0	-254.949	84.0	82.656	2373.838
E	70 K Supply	350.0	349.520	178.0	177.518	2418.368
F	70 K Return	-367.0	-367.731	198.0	203.293	2425.090
G	Two-phase He	0.0	-2.988	-85.0	-87.708	2113.454
H	Warm-up	160.0	167.844	-184.0	-180.315	2311.114
Beam	Gate Valve Flange	0.0	1.962	-289.0	-286.148	2238.766

Note 1: The origin of the x-y-z coordinate system is located on the vacuum vessel flange at the upstream end.
Note 2: The Z coordinate is positive in the downstream direction. Looking downstream, the X coordinate is positive to the left and the Y coordinate is positive up.
Note 3: The upstream and downstream Z-positions of the pipes are to the face of the flanges.

9. CRYOMODULE SUPPORT

9.1. Bottom Supports

The cryomodule support structure is pictured in Figure 9.1 below. There are four supports per cryomodule, two on each side, located 320.0 mm on each side of the module center line and 1215.8 mm apart in the Z-direction. The weight of the module, approximately 4,000 lb (1818 kg) is distributed equally on each support (455 kg).

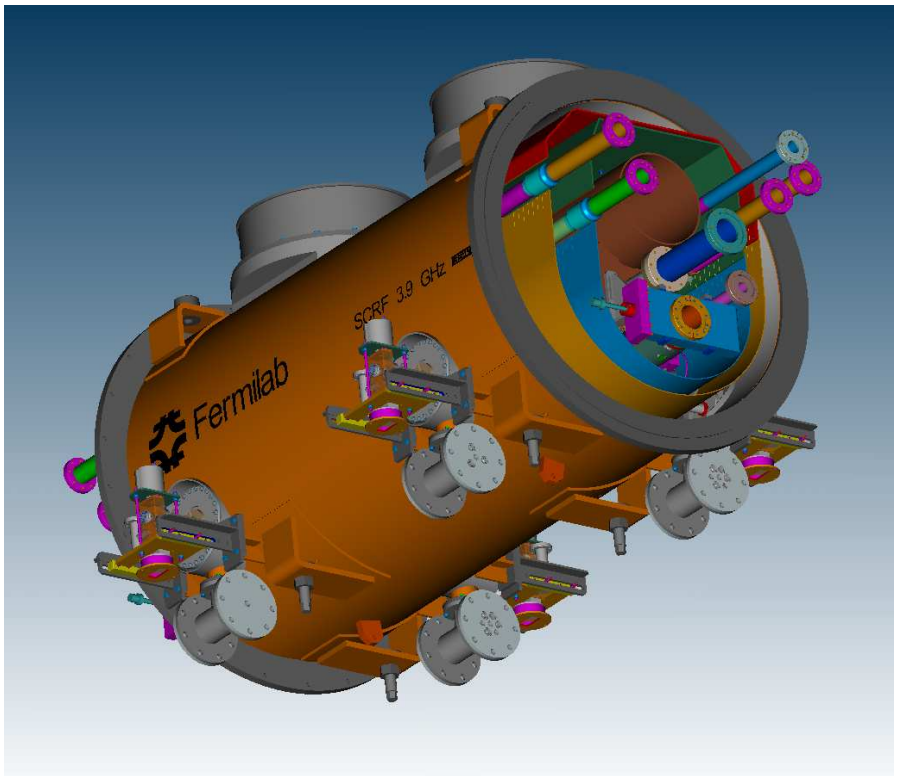

Figure 9.1 Cryomodule Supports

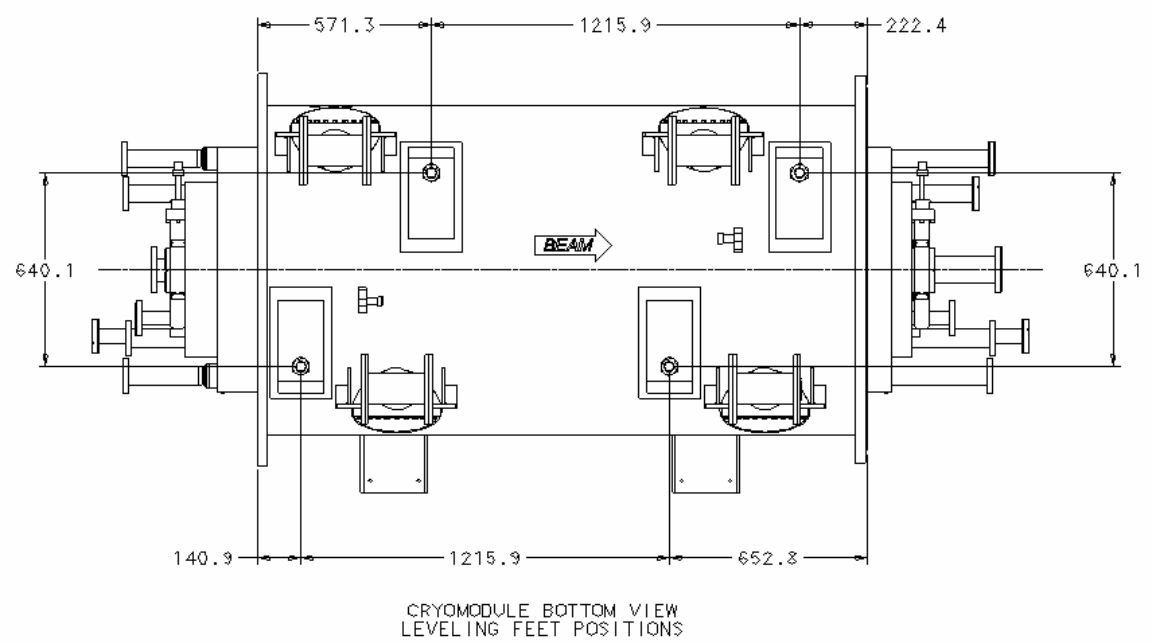

Figure 9.2 Cyomodule Support Location Details (viewed from below)

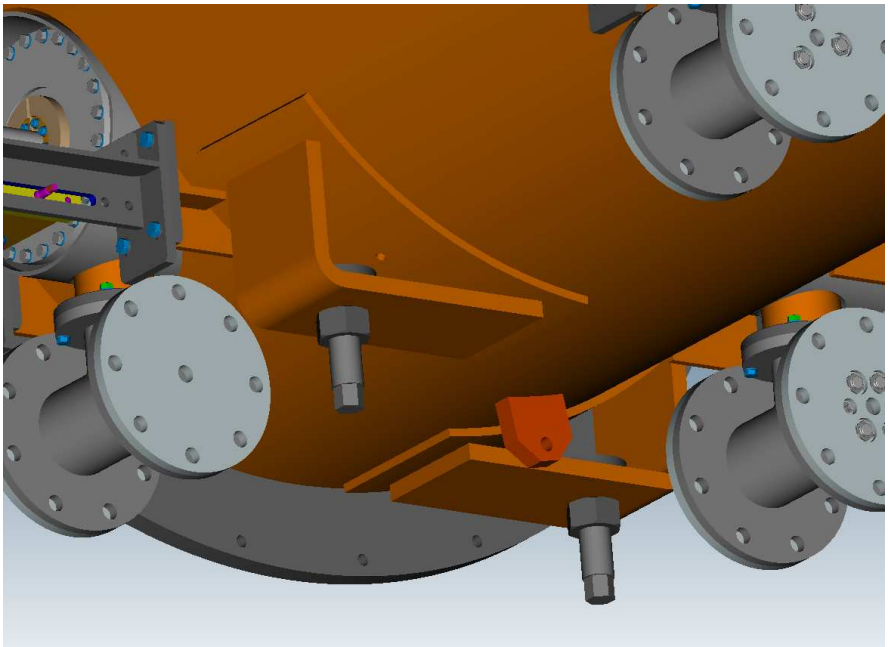

Figure 9.3 Closer View of Cyomodule Supports

Each of the four bottom supports is fitted with a threaded M36 x 4 stud (Figure 9.4). The studs are used to manually set the vertical position of the module. The bottom surface of the threaded studs can be located from 331 mm to 377 mm below the beam line. The studs are not expected to provide any appreciable horizontal stability. Stability in the z-direction (beam-wise) is achieved through the four tie rods that are part of the vacuum bellows assembly (Figure 9.5) joining adjacent cryomodules. Stability in the x-direction (lateral) is achieved by a support frame work designed and provided by DESY (not shown).

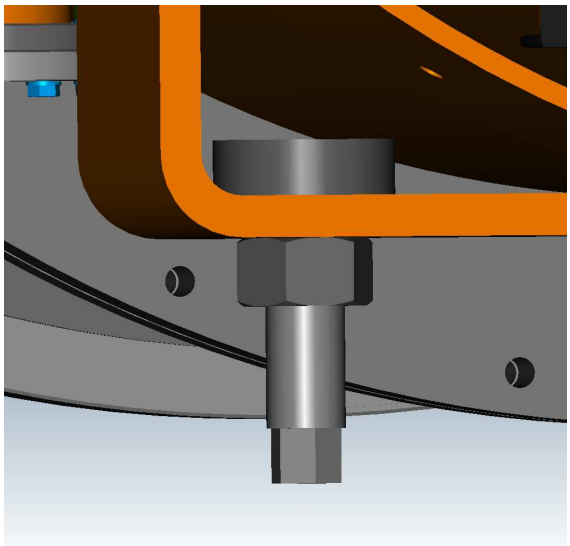

Figure 9.4 Threaded Adjustable Supports

9.2. Lifting Points

The module has four threaded M36x4 lifting points (Figure 9.5). All four must be used for a balanced lift. They are located near the top of the vacuum vessel, 344.5 mm on either side of the centerline, two on each end of the vessel, 1651.0 mm apart.

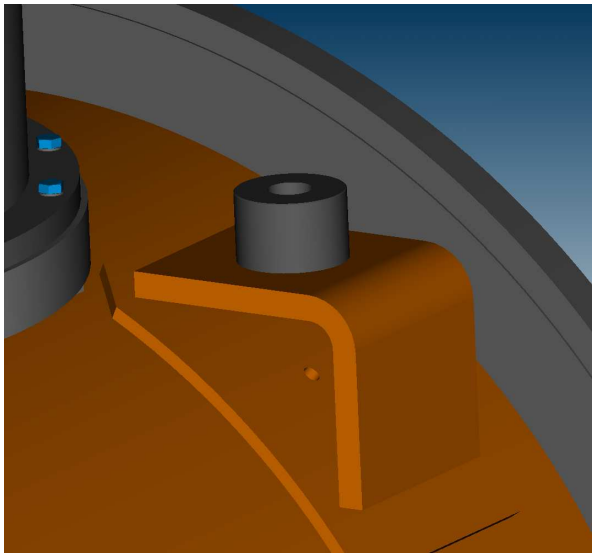

Figure 9.5 Lifting boss – one of four

9.3. Vacuum Bellows

The module is restrained axially (z-direction) by the bellows assembly (Figure 9.6). Once the module, and its neighbors, are aligned and the bellows is installed, the assembly is stiffened by the four tie rods. This prevents the axial movement due to the large pressure forces that result under vacuum. The flanges of the bellows assembly are designed to mate with the downstream end of cryomodule ACC1 and the upstream end of ACC39.

Bellows specifications are:

Material – SA 240-316L.

Overall length – 30.4 in (772 mm).

External design pressure – 14.7 psi (1 bar).

Internal design pressure – 29 psi (2 bar).

Axial extension – 0.1 in (2.5 mm).

Axial precompression – 0.1 in (2.5 mm).

Lateral deflection – 0.1 in (2.5 mm).

Minimum fatigue cycles – 500.

The bellows assembly is analyzed in detail in the Interconnect Bellows Engineering Note [reference 5].

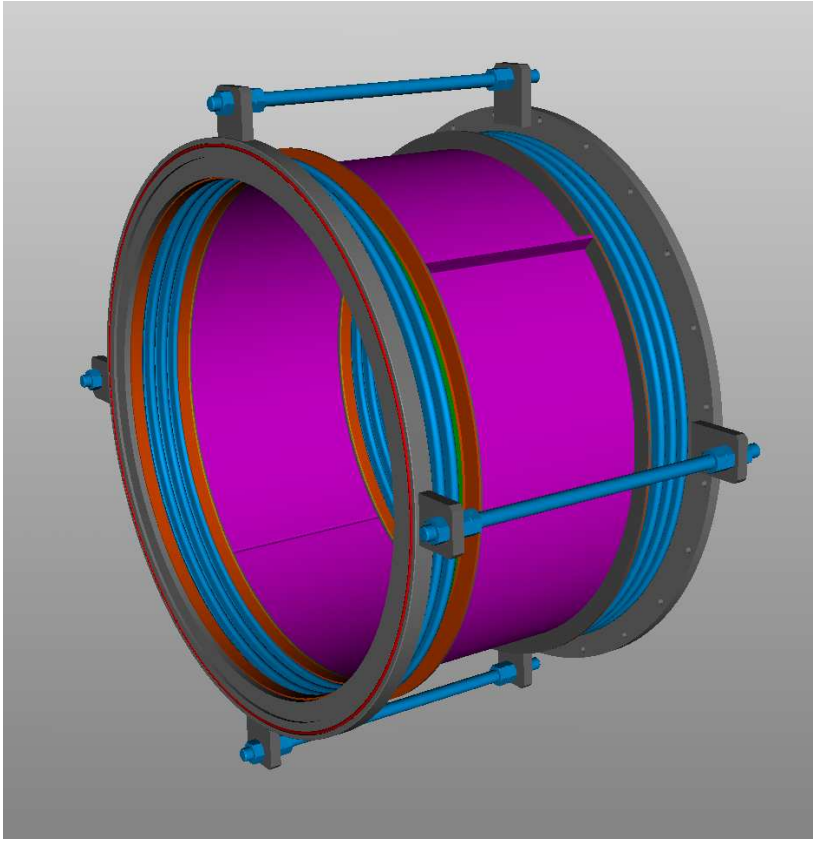

Figure 9.6 Bellows Assembly. (Note for the installation at DESY the inner nuts on each tie rod will not be used. DESY will install only the outer nuts to prevent transfer of forces due to end can plate displacement.)

The vacuum flange details (Figure 9.7) represent the upstream flange of the bellows assembly (left view in Figure 9.7) which connects to the downstream flange of ACC1 and the downstream flange of ACC39 (right view in Figure 9.7) which connects to the FLASH end can.

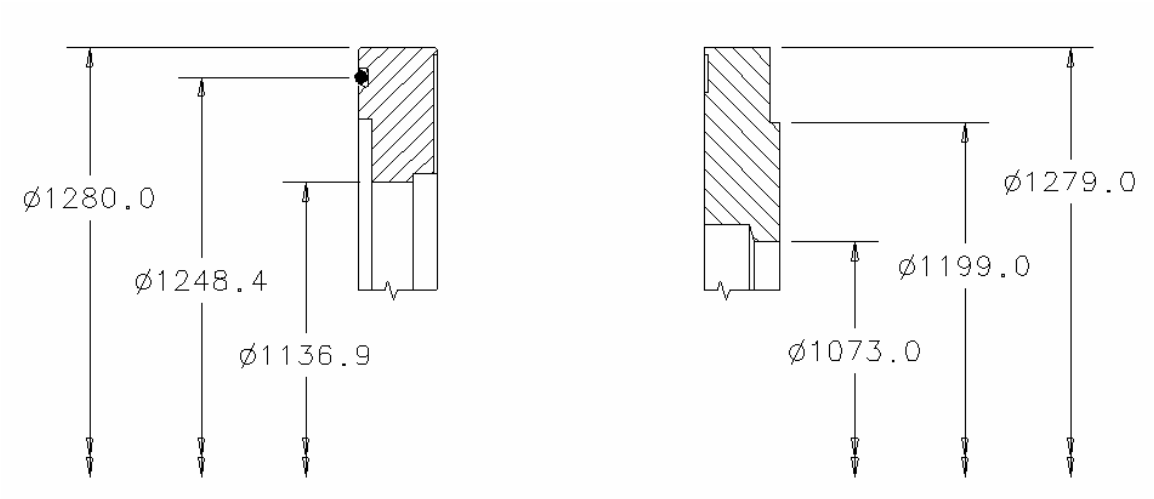

Figure 9.7 Vacuum Flange Details.

10. ALIGNMENT POINTS

There are two alignment platforms located near the top of the module on the left side as viewed looking downstream. They are positioned at each cold mass support port location as shown in Figure 10.1. A Taylor-Hobson nest and two alignment ball targets are positioned on each platform as shown in Figure 10.2.

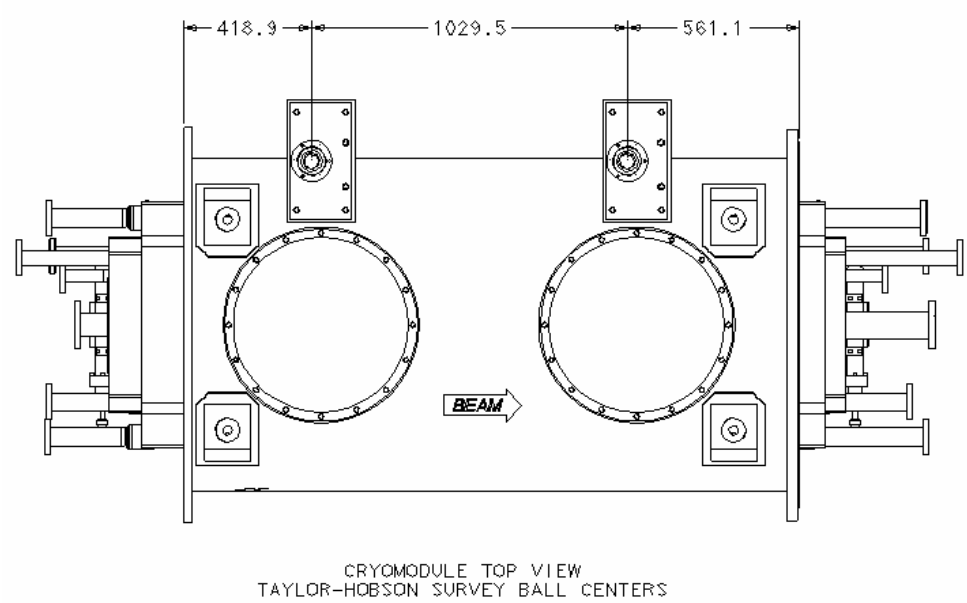

Figure 10.1 Locations of alignment platforms.

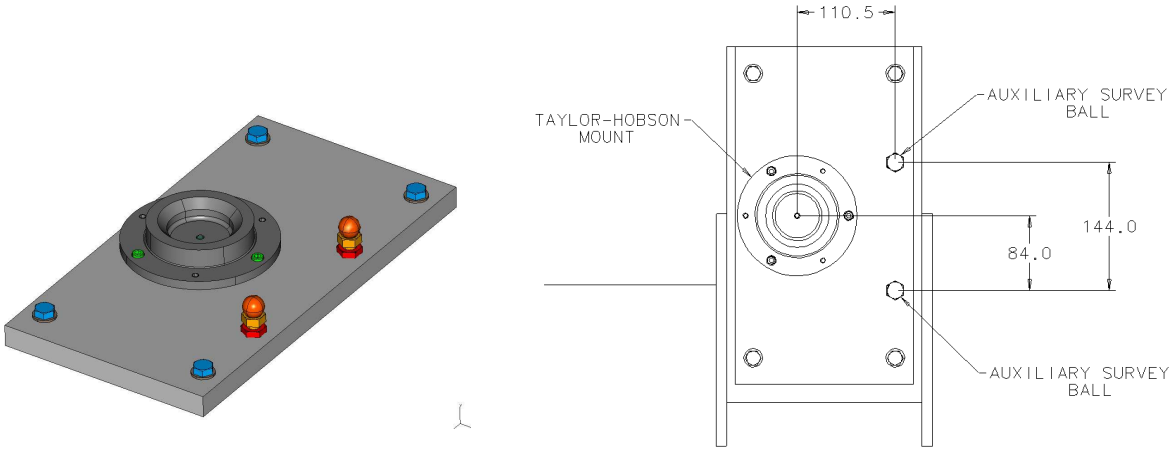

Figure 10.2 Locations of the Taylor Hobson nest and the two survey balls on each alignment platform.

11. FEED THROUGH DETAILS

Each of the four couplers has a “tee” below it for two feedthrough flanges each. The flanges are labeled “A” and “B” as shown in the figure below. There are no auxiliary feedthrough flanges as in the case of DESY Mod 9. The cavities are designated nos. 1 – 4 from upstream to downstream. Similarly so are the couplers and associated “A” and “B” flanges.

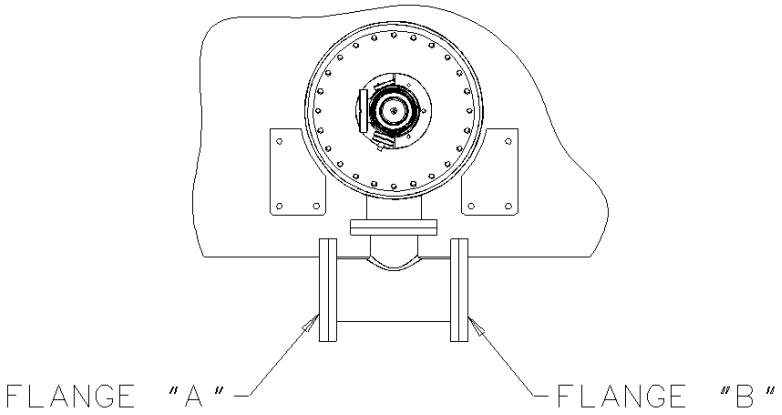

Figure 11.1 Orientation of Feedthrough Flanges A and B.

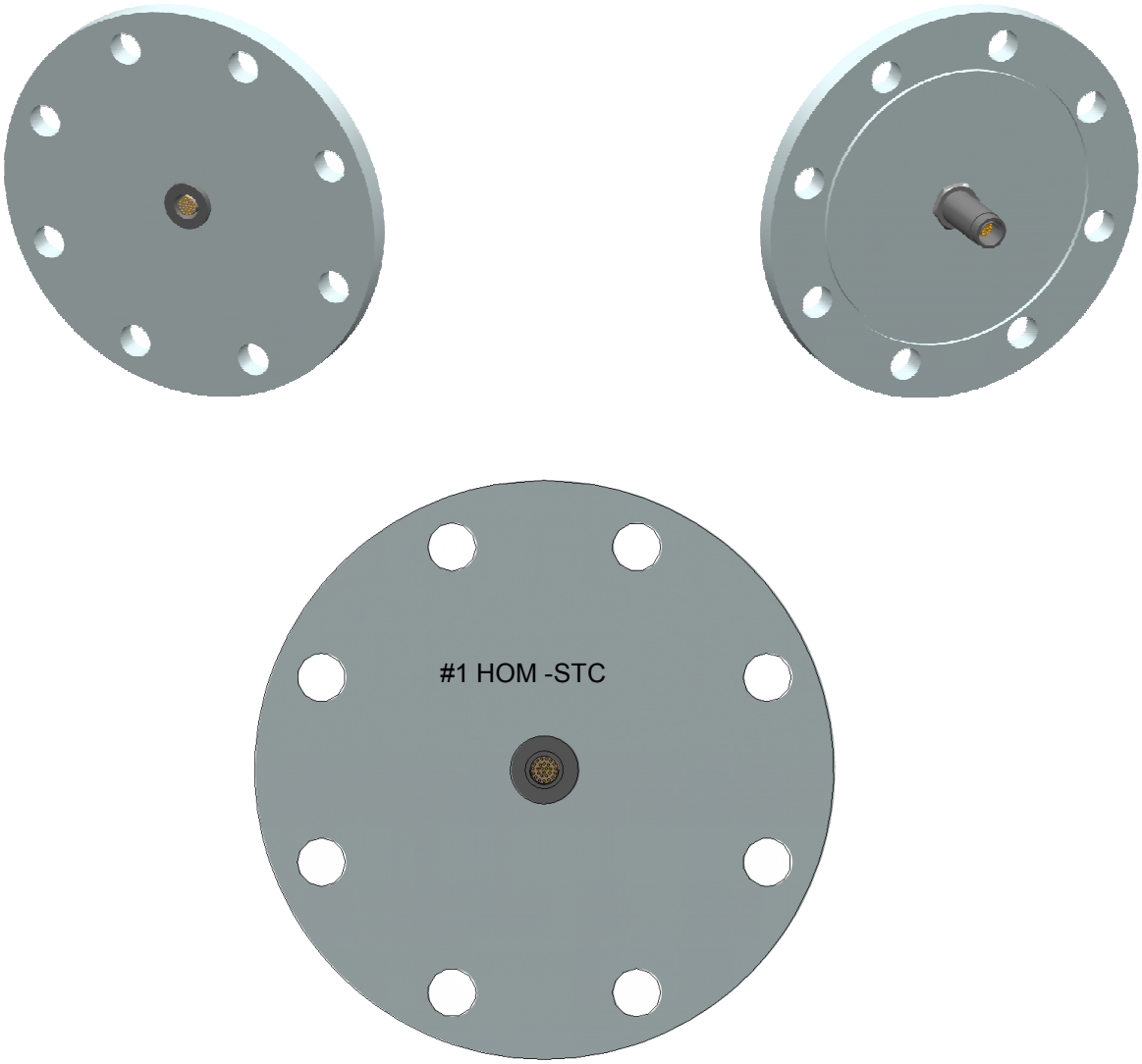

Figure 11.2 Flange A (Cavities 1-3)

Table 11.1 Feedthrough Assignments for Flange A (cavities 1-3)

Feed Through No.	Application	Inside Connector	Feed Through Type	Outside Connector
1	HOM-STC	None	Fischer DEE105 A102-130 27 pin soldered	Fischer S105 A102-130 + 27 pin soldered Order No. FP05.526

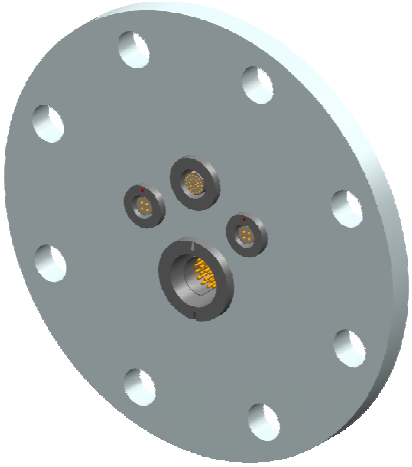

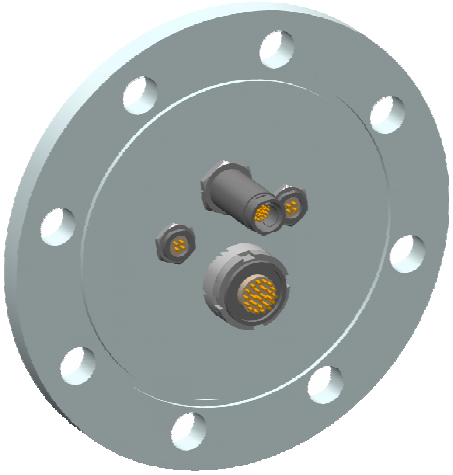

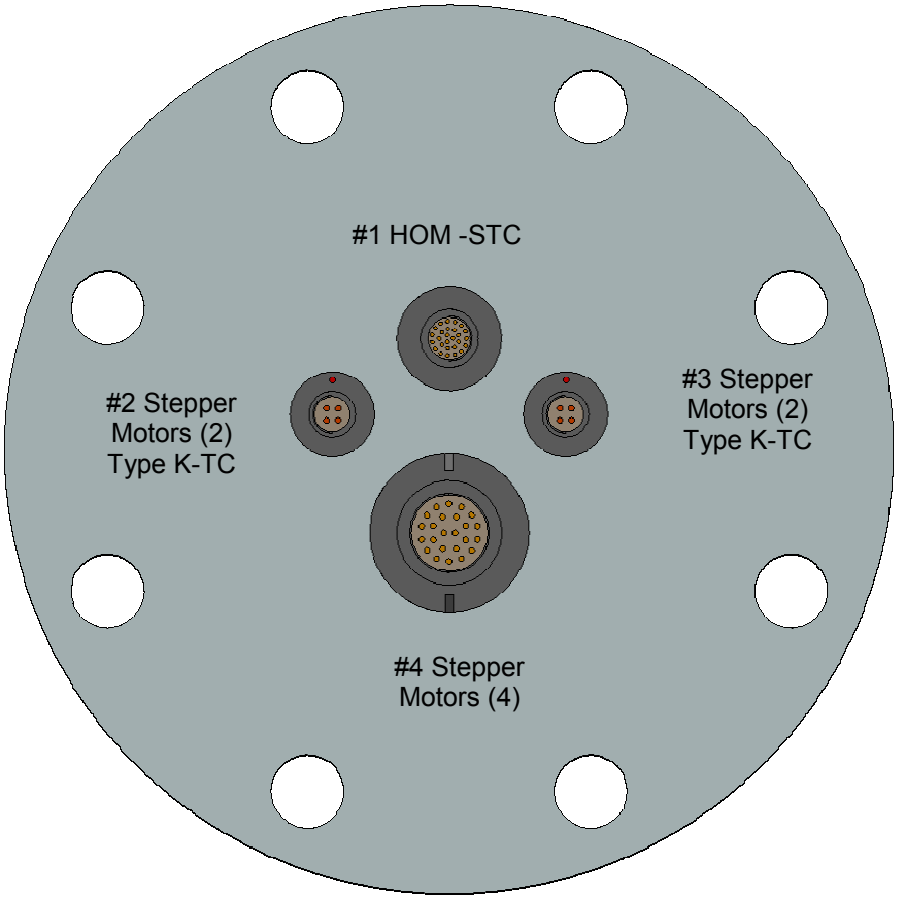

Figure 11.3 Flange A (Cavity 4)

Table 11.2 Feedthrough Assignments for Flange A (cavity 4)

Feed Through No.	Application	Inside Connector	Feed Through Type	Outside Connector
1	HOM-STC	Fischer E2 105.102.43 BL.27P.F.SERT S PEEK Order No. EP20.690 crimp	Fischer WDE105 AZ102-120 27 pin stuck Order No. FP05.585	Fischer S105 A102-130 + 27 pin soldered Order No. FP05.526
2	Stepper Motors (2) Type K - TC		Fischer DEE104 A036-60 4 pin soldered	Fischer S104 A036-60 4 pin soldered
3	Stepper Motors (2) Type K - TC		Fischer DEE104 A036-60 4 pin soldered	Fischer S104 A036-60 4 pin soldered
4	Stepper Motors (4)		Fischer DEE 106 Z017-130 24 pin soldered	Fischer S106 Z017-130 24 pin soldered

Table 11.3 Pin Assignments for Flange A1 and A2, Feedthrough 1

Sensor Designation	Sensor No.	Wire	Description	Contact
HOM 1-1 B	49214	I+ I- U+ U-	HOM 1 #1 Button	1 2 3 4
HOM 1-1 T	49240	I+ I- U+ U-	HOM 1 #1 Top Hat	5 6 7 8
HOM 1-1 F	49239	I+ I- U+ U-	HOM 1 #1 Flange	9 10 11 12
HOM 1-2 B	49222	I+ I- U+ U-	HOM 1 #2 Button	13 14 15 16
HOM 1-2 T	49392	I+ I- U+ U-	HOM 1 #2 Top Hat	17 18 19 20
HOM 1-2 F	49380	I+ I- U+ U-	HOM 1 #2 Flange	21 22 23 24
HOM 2-1 B	49261	I+ I- U+ U-	HOM 2 #1 Button	1 2 3 4
HOM 2-1 T	49379	I+ I- U+ U-	HOM 2 #1 Top Hat	5 6 7 8
HOM 2-2 F	49262	I+ I- U+ U-	HOM 2 #2 Flange	9 10 11 12
HOM 2-2 B	49406	I+ I- U+ U-	HOM 2 #2 Button	13 14 15 16
HOM 2-2 T	49409	I+ I- U+ U-	HOM 2 #2 Top Hat	17 18 19 20
HOM 2-2 F	49408	I+ I- U+ U-	HOM 2 #2 Flange	21 22 23 24

Table 11.4 Pin Assignments for Flange A3 and A4, Feedthrough 1

Sensor Designation	Sensor No.	Wire	Description	Contact
HOM 3-1 B	49246	I+ I- U+ U-	HOM 3 #1 Button	1 2 3 4
HOM 3-1 T	49260	I+ I- U+ U-	HOM 3 #1 Top Hat	5 6 7 8
HOM 3-1 F	49252	I+ I- U+ U-	HOM 3 #1 Flange	9 10 11 12
HOM 3-2 B	49233	I+ I- U+ U-	HOM 3 #2 Button	13 14 15 16
HOM 3-2 T	49220	I+ I- U+ U-	HOM 3 #2 Top Hat	17 18 19 20
HOM 3-2 F	49251	I+ I- U+ U-	HOM 3 #2 Flange	21 22 23 24
HOM 4-1 B	50381	I+ I- U+ U-	HOM 4 #1 Button	1 2 3 4
HOM 4-1 T	49256	I+ I- U+ U-	HOM 4 #1 Top Hat	5 6 7 8
HOM 4-1 F	49274	I+ I- U+ U-	HOM 4 #1 Flange	9 10 11 12
HOM 4-2 B	49242	I+ I- U+ U-	HOM 4 #2 Button	13 14 15 16
HOM 4-2 T	49244	I+ I- U+ U-	HOM 4 #2 Top Hat	17 18 19 20
HOM 4-2 F	49243	I+ I- U+ U-	HOM 4 #2 Flange	21 22 23 24

Table 11.5 Pin Assignments for Flange A4, Feedthrough 2 and 3

measure point in module	sen. num.	plate num.	pol.	description	flange/ connec./num.	contact in module
						4p female
TC1	None	TypeK	+	Motor1 thermocouple	A4.2/1	1
			-			2
TC2	None	TypeK	+	Motor2 thermocouple	A4.2/2	3
			-			4
TC3	None	TypeK	+	Motor3 thermocouple	A4.3/1	1
			-			2
TC4	None	TypeK	+	Motor4 thermocouple	A4.3/2	3
			-			4

Table 11.6 Pin Assignments for Flange A4, Feedthrough 4

measuring point in Module 3.9GHz	remark Phytron - motor	motor plug DB9 male cable color	Pin Nr	intern cable plug DB9 fem. Pin Nr.	cable color	description stepper motor at:	flange/ connec./number Fischer 106	con-tact 24pM
D1		yellow	1	1	yellow	**Cavity1**	**A4/4**	1
		red	6	6	blue		in module male	2
	1	green	3	3	yellow			3
		blue	5	5	red			4
			nc	2	green			5
			nc	4	green			6
D2		yellow	1	1	yellow	**Cavity2**	**A4/4**	7
		red	6	6	blue			8
	2	green	3	3	yellow			9
		blue	5	5	red			10
			nc	2	green			11
			nc	4	green			12
D3		yellow	1	1	yellow	**Cavity3**	**A4/4**	13
		red	6	6	blue			14
	3	green	3	3	yellow			15
		blue	5	5	red			16
			nc	2	green			17
			nc	4	green			18
D4		yellow	1	1	yellow	**Cavity4**	**A4/4**	19
		red	6	6	blue			20
	4	green	3	3	yellow			21
		blue	5	5	red			22
			nc	2	green			23
			nc	4	green			24

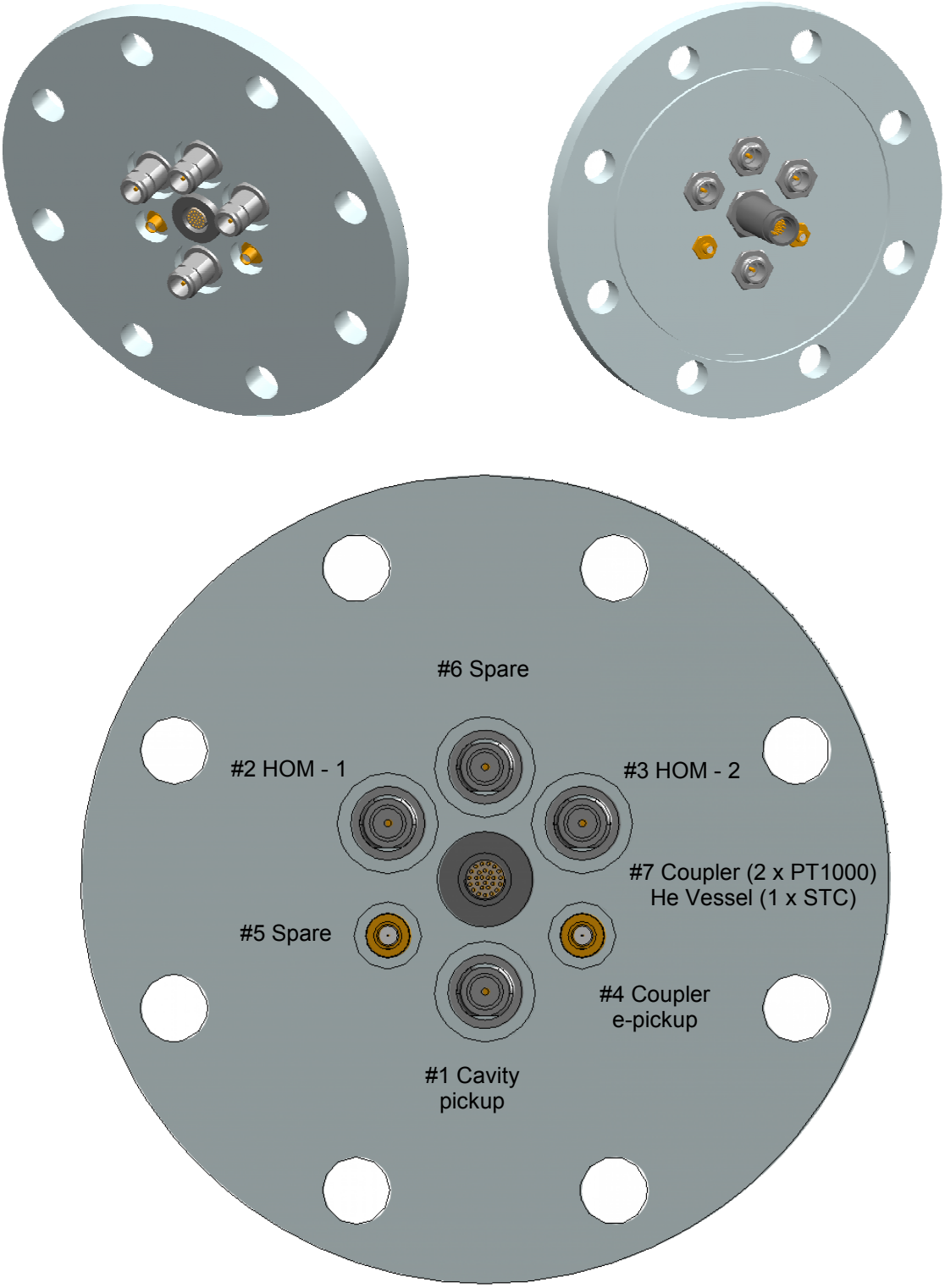

Figure 11.4 Flange B (all cavities)

Table 11.7 Feedthrough Assignments for Flange B (all cavities)

Feed Through No.	Application	Inside Connector	Feed Through Type	Outside Connector
1	Cavity pick up		34_N-50-0-3/133NE	
2	HOM 1		34_N-50-0-3/133NE	
3	HOM 2		34_N-50-0-3/133NE	
4	Coupler e-pick up		34_SMA-50-0-3/111NE	
5	Spare		34_SMA-50-0-3/111NE	
6	Spare		34_N-50-0-3/133NE	
7	Coupler 2 x PT1000 He Vessel 1 x STC	Fischer E2 105.102.43 BL.27P.F.SERT S PEEK Order No. EP20.690 crimp	Fischer WDE105 AZ102-120 27 pin stuck Order No. FP05.585	Fischer S105 A102-130 + 27 pin soldered Order No. FP05.526

Table 11.8 Pin Assignments for Flange B (all cavities), Feedthrough No. 7

Sensor Designation	Sensor No.	Wire	Description	Contact
ACC39STC1K10	49418	I+ I- U+ U-	Cryostat 1 Pos. 1	1 2 3 4
ACC39STP9M1	None	I+ I- U+ U-	Main Coupler 1, Primary 12 o'clock position	5 6 7 8
ACC39STP9M1B	None	I+ I- U+ U-	Main Coupler 1, Redundant 6 o'clock position	9 10 11 12
ACC39STC1K20	49419	I+ I- U+ U-	Cryostat 2 Pos. 1	1 2 3 4
ACC39STP9M2	None	I+ I- U+ U-	Main Coupler 2, Primary 12 o'clock position	5 6 7 8
ACC39STP9M2B	None	I+ I- U+ U-	Main Coupler 2, Redundant 6 o'clock position	9 10 11 12
ACC39STC1K30	49247	I+ I- U+ U-	Cryostat 3 Pos 1	1 2 3 4
ACC39STP9M3	None	I+ I- U+ U-	Main Coupler 3, Primary 12 o'clock position	5 6 7 8
ACC39STP9M3B	None	I+ I- U+ U-	Main Coupler 3, Redundant 6 o'clock position	9 10 11 12
ACC39STC1K40	49232	I+ I- U+ U-	Cryostat 4 Pos 1	1 2 3 4
ACC39STP9M4	None	I+ I- U+ U-	Main Coupler 4, Primary 12 o'clock position	5 6 7 8
ACC39STP9M4B	None	I+ I- U+ U-	Main Coupler 4, Redundant 6 o'clock position	9 10 11 12

12. REFERENCES

1. Elvin Harms to Tom Peterson, "Cryogenic Instrumentation", e-mail, 22 Jan 2008.
2. 3.9 GHz Cryomodule Engineering Note, DESY EDMS No. D…1134181.
3. ACC39 Piping Mechanical Loads, DESY EDMS No. D…1199141.
4. Detlef Sellmann to Tom Peterson, "3.9 GHz Cryomodule Questions", e-mail, 8 Feb 2008.
5. 3.9 GHz Interconnection Bellows Engineering Note, Fermilab Specification No. 5500-ES-371043, DESY EDMS No. D…1199211.