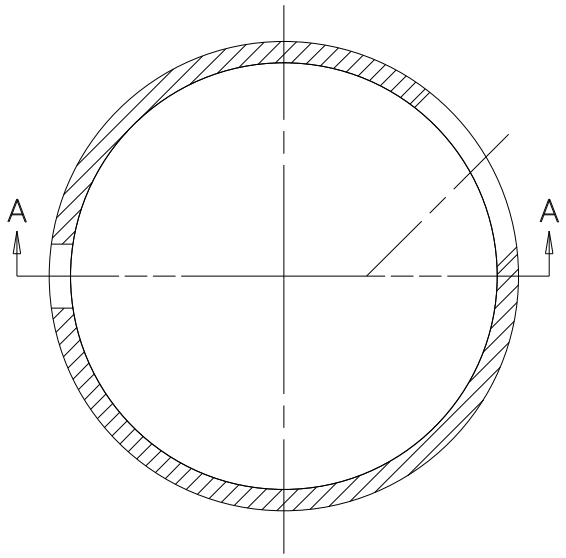

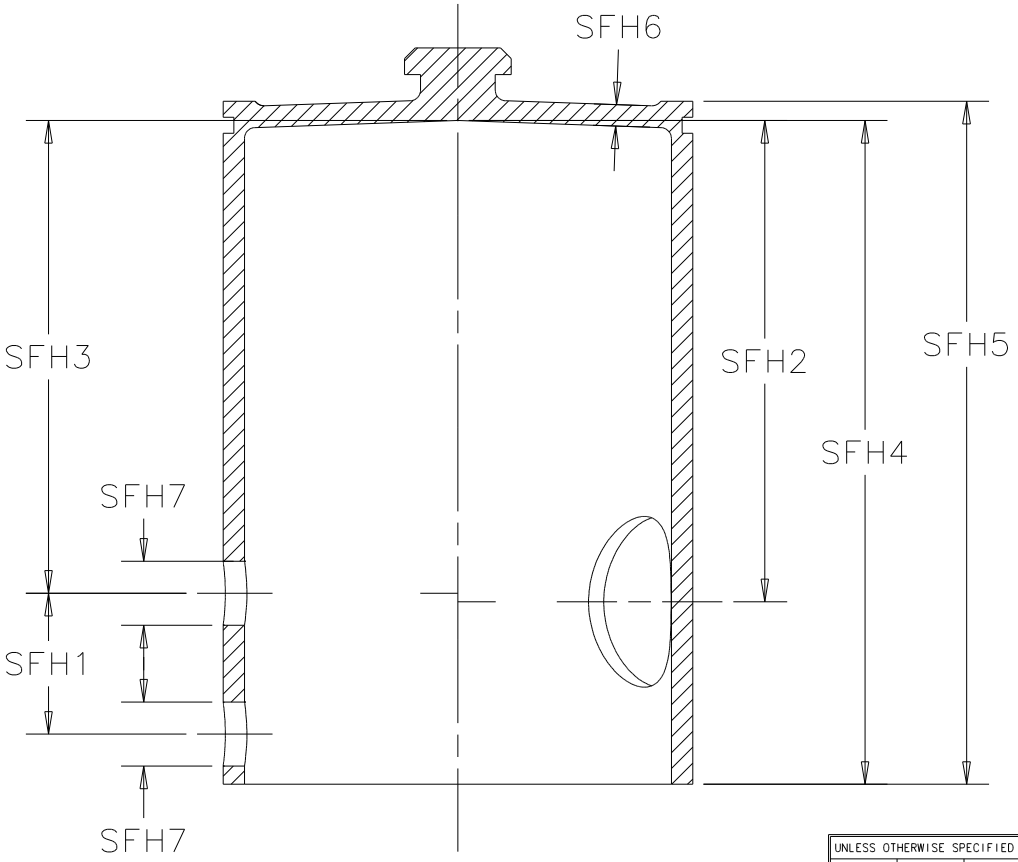

SECTION A-A

UNLESS OTHERWISE SPECIFIED			ORIGINATOR	DESY	
.XX mm	.XXX in	ANGLE	DRAWN	E.PIRTLE	09-JUN-2005
±	±	±	CHECKED	M.FOLEY	28-SEP-2005
			APPROVED	M.FOLEY	28-SEP-2005

1. BREAK ALL SHARP EDGES MAX.
2. DO NOT SCALE DRAWING.
3. DIMENSIONS BASED UPON ASME Y14.5M-1994
4. MAX. ALL MACH. SURFACES √
5. DRAWING UNITS: METRIC

USED ON

MATERIAL

FERMI NATIONAL ACCELERATOR LABORATORY
UNITED STATES DEPARTMENT OF ENERGY

QUALITY CONTROL DRAWING
DESY 1.3GHZ TESLA RF CAVITY
SHORT END HOM FORMTEIL HOUSING

SCALE	DRAWING NUMBER	SHEET	REV
1.5:1	4904.010-MA-439328	1 OF 1	

3RD

CREATED WITH : Ideas11NXSeries | GROUP: ACCELERATOR MECH. SUPPT.

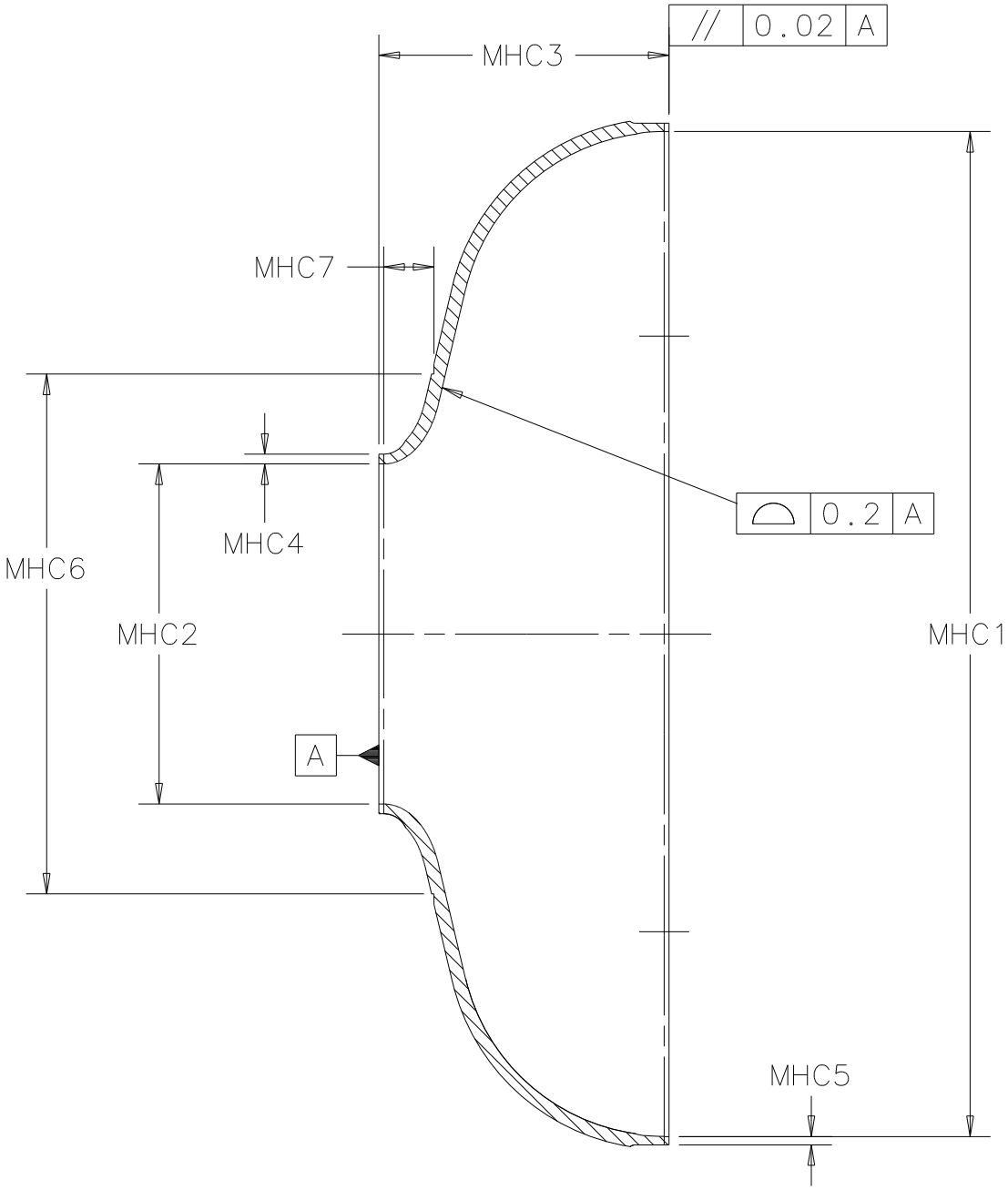

DIAMETER, FORM AND POSITION TOLERANCES ARE IN THE STRAINED CONDITION

UNLESS OTHERWISE SPECIFIED			ORIGINATOR	DESY	
.XX mm	.XXX in	ANGLE	DRAWN	E.PIRTLE	08-JUN-2005
±	±	±	CHECKED	M.FOLEY	28-SEP-2005
			APPROVED	M.FOLEY	28-SEP-2005

1. BREAK ALL SHARP EDGES MAX.
2. DO NOT SCALE DRAWING.
3. DIMENSIONS BASED UPON ASME Y14.5M-1994
4. MAX. ALL MACH. SURFACES √
5. DRAWING UNITS: METRIC

USED ON

MATERIAL

FERMI NATIONAL ACCELERATOR LABORATORY
UNITED STATES DEPARTMENT OF ENERGY

QUALITY CONTROL DOCUMENT
DESY 1.3GHZ TESLA RF CAVITY
MID HALF CELL

SCALE	DRAWING NUMBER	SHEET	REV
3:4	4904.010-MA-439321	1 OF 1	

CREATED WITH : Ideas11NXSeries | GROUP: ACCELERATOR MECH. SUPPT.

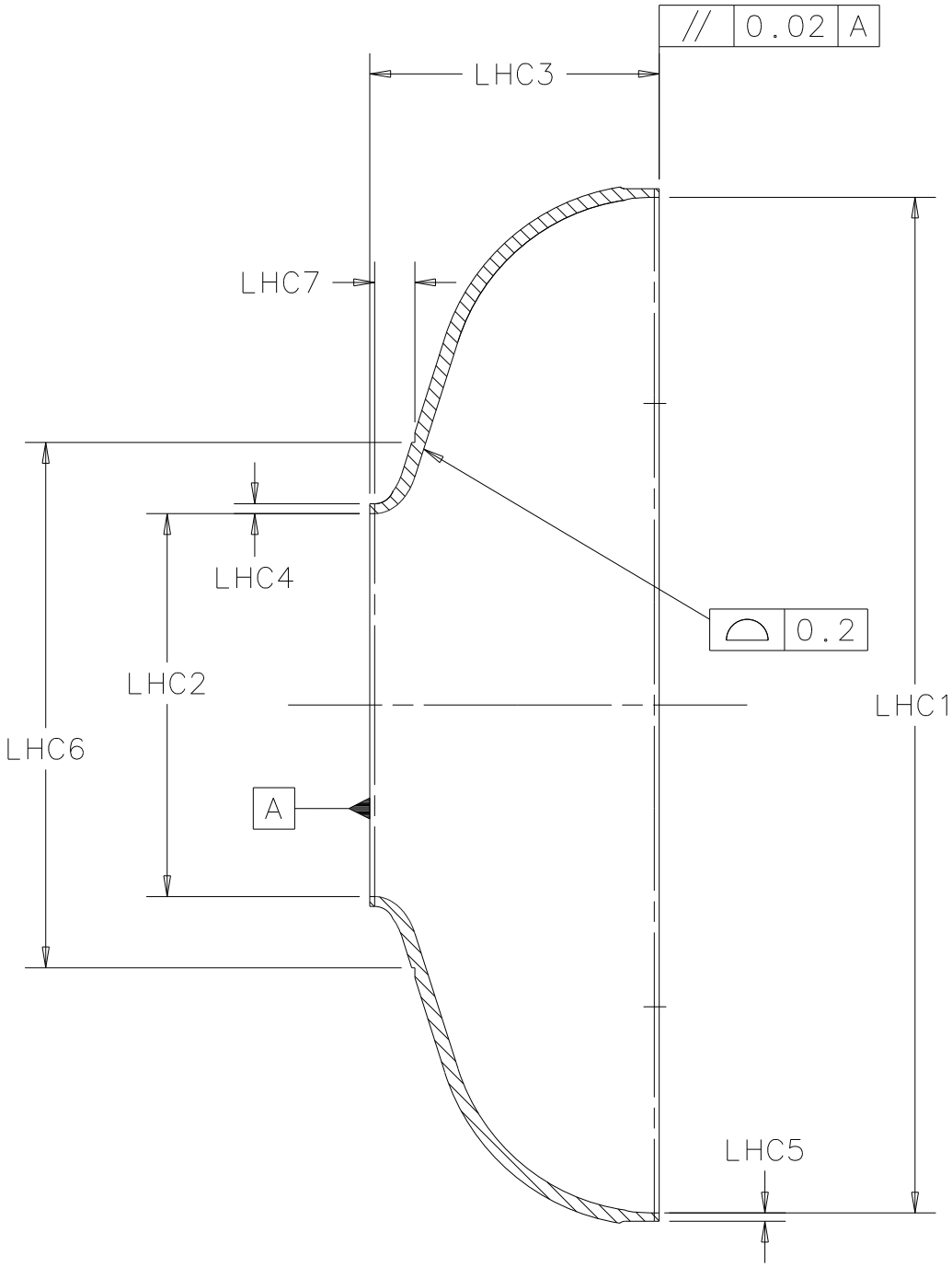

DIAMETER, FORM AND POSITION TOLERANCES ARE IN THE STRAINED CONDITION

UNLESS OTHERWISE SPECIFIED			ORIGINATOR	DESY	
.XX mm	.XXX in	ANGLE	DRAWN	E.PIRTLE	08-JUN-2005
±	±	±	CHECKED	M.FOLEY	28-SEP-2005
			APPROVED	M.FOLEY	28-SEP-2005

1. BREAK ALL SHARP EDGES MAX.
2. DO NOT SCALE DRAWING.
3. DIMENSIONS BASED UPON ASME Y14.5M-1994
4. MAX. ALL MACH. SURFACES √
5. DRAWING UNITS: METRIC

USED ON

MATERIAL

FERMI NATIONAL ACCELERATOR LABORATORY
UNITED STATES DEPARTMENT OF ENERGY

QUALITY CONTROL DRAWING
DESY 1.3GHZ TESLA RF CAVITY
LONG END HALF CELL

SCALE	DRAWING NUMBER	SHEET	REV
3:4	4904.010-MA-439322	1 OF 1	

CREATED WITH : Ideas11NXSeries | GROUP: ACCELERATOR MECH. SUPPT.

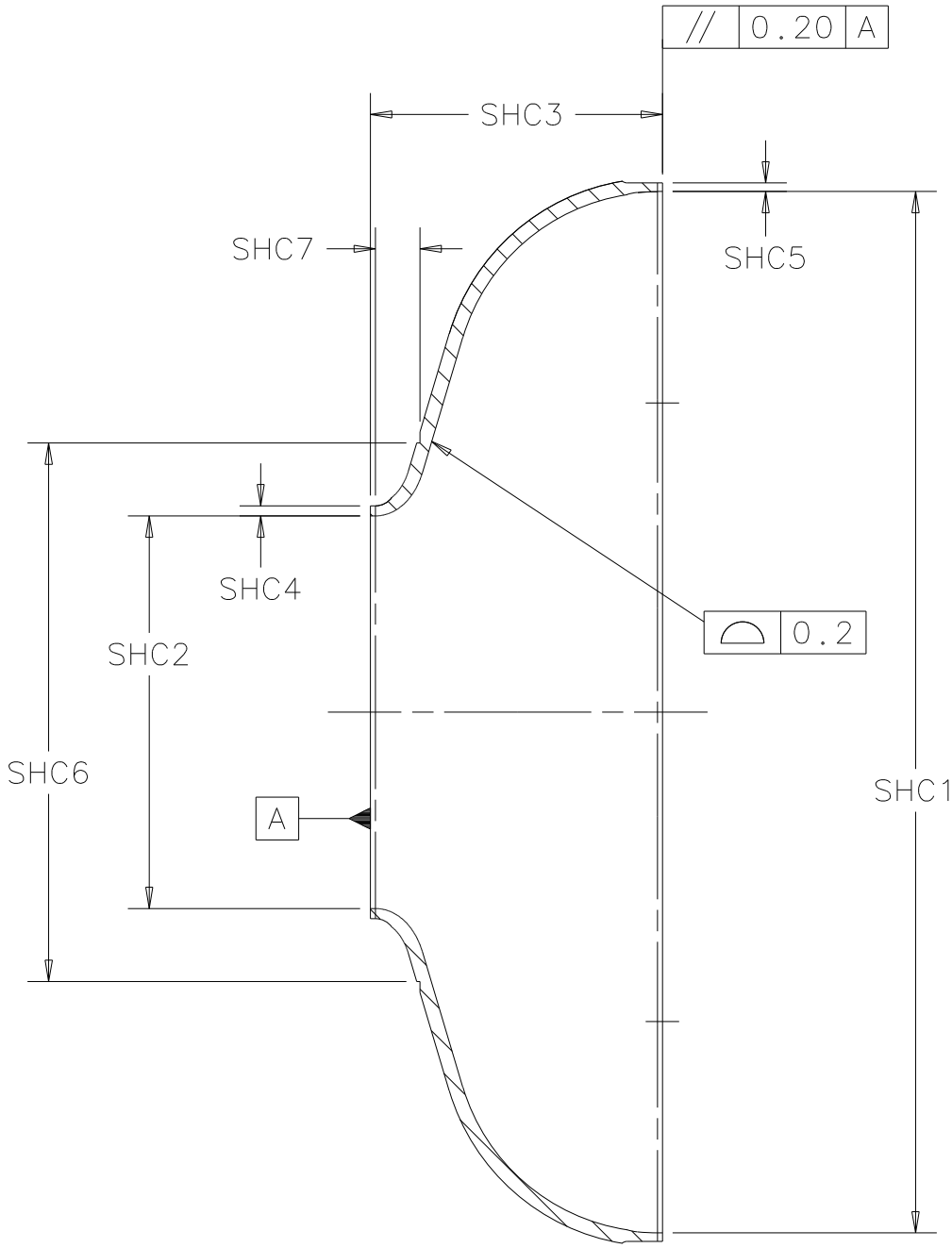

DIAMETER, FORM AND POSITION TOLERANCES ARE IN THE STRAINED CONDITION

UNLESS OTHERWISE SPECIFIED			ORIGINATOR	DESY	
.XX mm	.XXX in	ANGLE	DRAWN	E.PIRTLE	08-JUN-2005
±	±	±	CHECKED	M.FOLEY	28-SEP-2005
			APPROVED	M.FOLEY	28-SEP-2005

1. BREAK ALL SHARP EDGES MAX.
2. DO NOT SCALE DRAWING.
3. DIMENSIONS BASED UPON ASME Y14.5M-1994
4. MAX. ALL MACH. SURFACES √
5. DRAWING UNITS: METRIC

USED ON

MATERIAL

FERMI NATIONAL ACCELERATOR LABORATORY
UNITED STATES DEPARTMENT OF ENERGY

QUALITY CONTROL DRAWING
DESY 1.3GHZ TESLA RF CAVITY
SHORT END HALF CELL

SCALE	DRAWING NUMBER	SHEET	REV
3:4	4904.010-MA-439323	1 OF 1	

CREATED WITH : Ideas11NXSeries | GROUP: ACCELERATOR MECH. SUPPT.

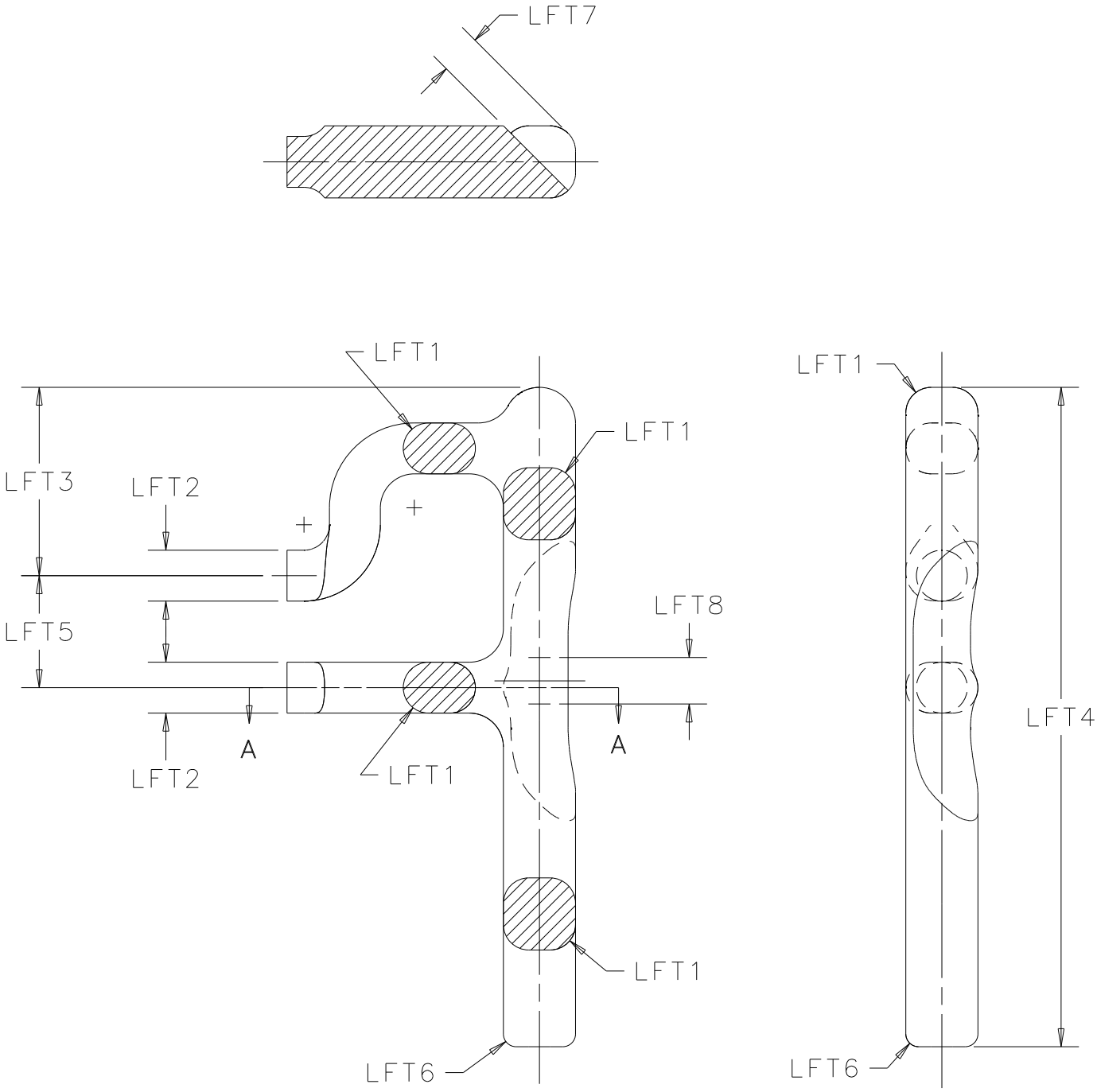

UNLESS OTHERWISE SPECIFIED			ORIGINATOR	DESY	
.XX mm	.XXX in	ANGLE	DRAWN	E.PIRTLE	09-JUN-2005
±	±	±	CHECKED	M.FOLEY	28-SEP-2005
			APPROVED	M.FOLEY	28-SEP-2005

1. BREAK ALL SHARP EDGES MAX.
2. DO NOT SCALE DRAWING.
3. DIMENSIONS BASED UPON ASME Y14.5M-1994
4. MAX. ALL MACH. SURFACES ✓
5. DRAWING UNITS: METRIC

USED ON

MATERIAL

FERMI NATIONAL ACCELERATOR LABORATORY
UNITED STATES DEPARTMENT OF ENERGY

QUALITY CONTROL DRAWING
DESY 1.3GHZ TESLA RF CAVITY
LONG END HOM FORMTEIL

SCALE	DRAWING NUMBER	SHEET	REV
1.5:1	4904.010-MA-439324	1 OF 1	

3RD

CREATED WITH : Ideas11NXSeries | GROUP: ACCELERATOR MECH. SUPPT.

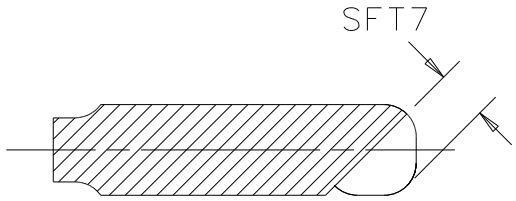

SECTION A-A

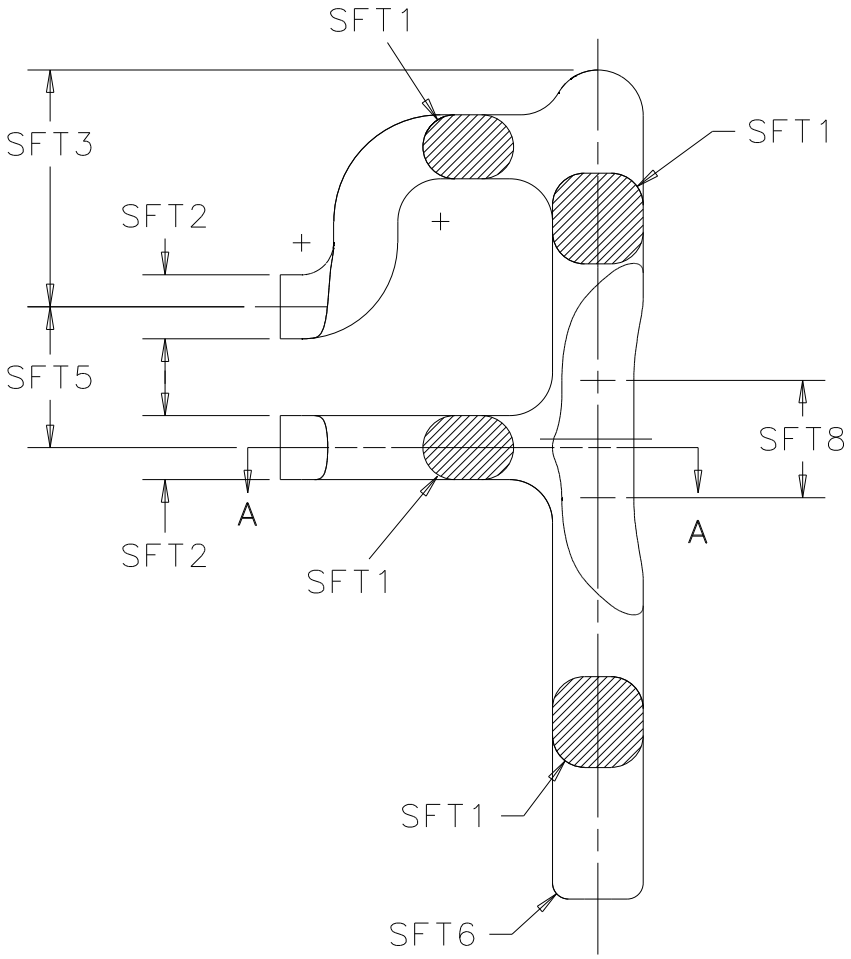

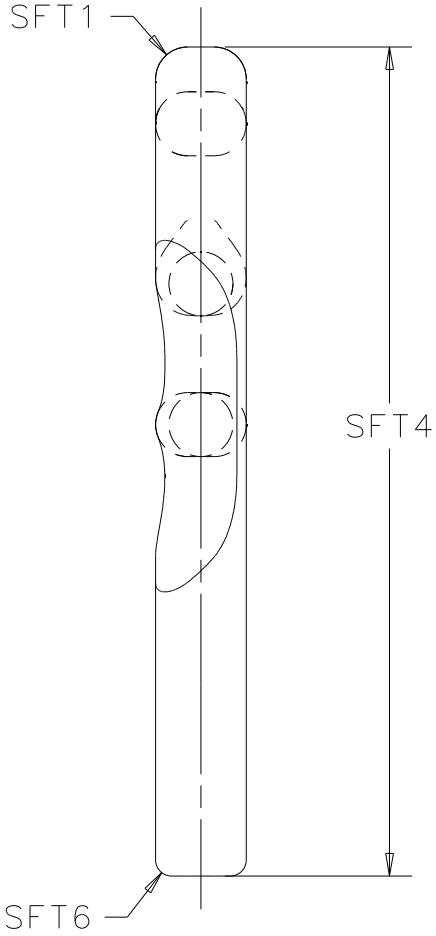

UNLESS OTHERWISE SPECIFIED			ORIGINATOR	DESY	
.XX mm	.XXX in	ANGLE	DRAWN	E.PIRTLE	08-JUN-2005
±	±	±	CHECKED	M.FOLEY	28-SEP-2005
			APPROVED	M.FOLEY	28-SEP-2005

1. BREAK ALL SHARP EDGES MAX.
2. DO NOT SCALE DRAWING.
3. DIMENSIONS BASED UPON ASME Y14.5M-1994
4. MAX. ALL MACH. SURFACES √
5. DRAWING UNITS: METRIC

USED ON

MATERIAL

FERMI NATIONAL ACCELERATOR LABORATORY
UNITED STATES DEPARTMENT OF ENERGY

QUALITY CONTROL DRAWING
DESY 1.3GHZ TESLA RF CAVITY
SHORT END HOM FORMTEIL

SCALE	DRAWING NUMBER	SHEET	REV
1.5:1	4904.010-MA-439326	1 OF 1	

3RD

CREATED WITH : Ideas11NXSeries | GROUP: ACCELERATOR MECH. SUPPT.

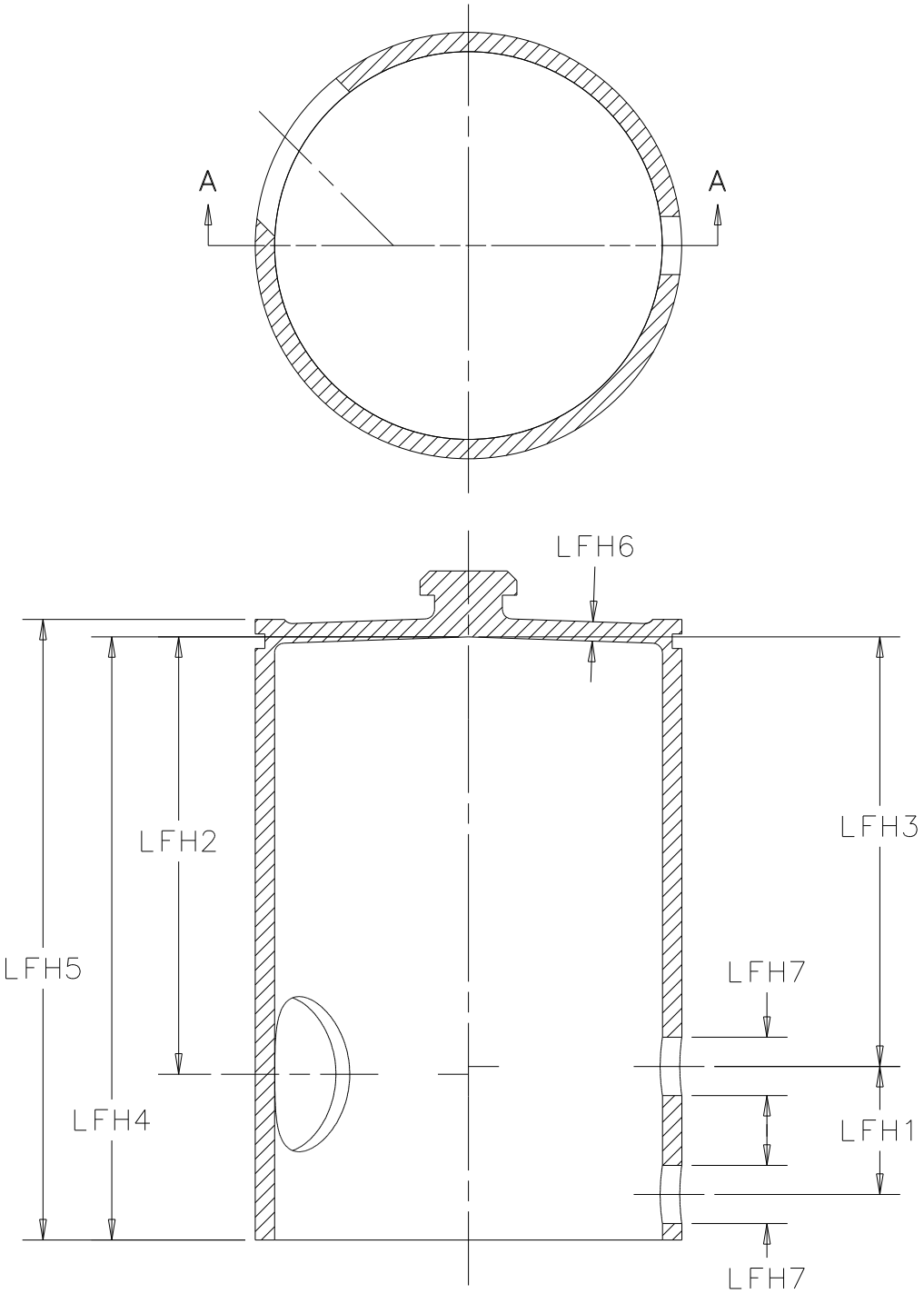

SECTION A-A

UNLESS OTHERWISE SPECIFIED			ORIGINATOR	DESY	
.XX mm	.XXX in	ANGLE	DRAWN	E.PIRTLE	09-JUN-2005
±	±	±	CHECKED	M.FOLEY	28-SEP-2005
			APPROVED	M.FOLEY	28-SEP-2005

1. BREAK ALL SHARP EDGES MAX.
2. DO NOT SCALE DRAWING.
3. DIMENSIONS BASED UPON ASME Y14.5M-1994
4. MAX. ALL MACH. SURFACES √
5. DRAWING UNITS: METRIC

USED ON

MATERIAL

FERMI NATIONAL ACCELERATOR LABORATORY
UNITED STATES DEPARTMENT OF ENERGY

QUALITY CONTROL DRAWING
DESY 1.3GHZ TESLA RF CAVITY
LONG END HOM FORMTEIL HOUSING

SCALE	DRAWING NUMBER	SHEET	REV
1.5:1	4904.010-MA-439327	1 OF 1	

3RD

CREATED WITH : Ideas11NXSeries | GROUP: ACCELERATOR MECH. SUPPT.

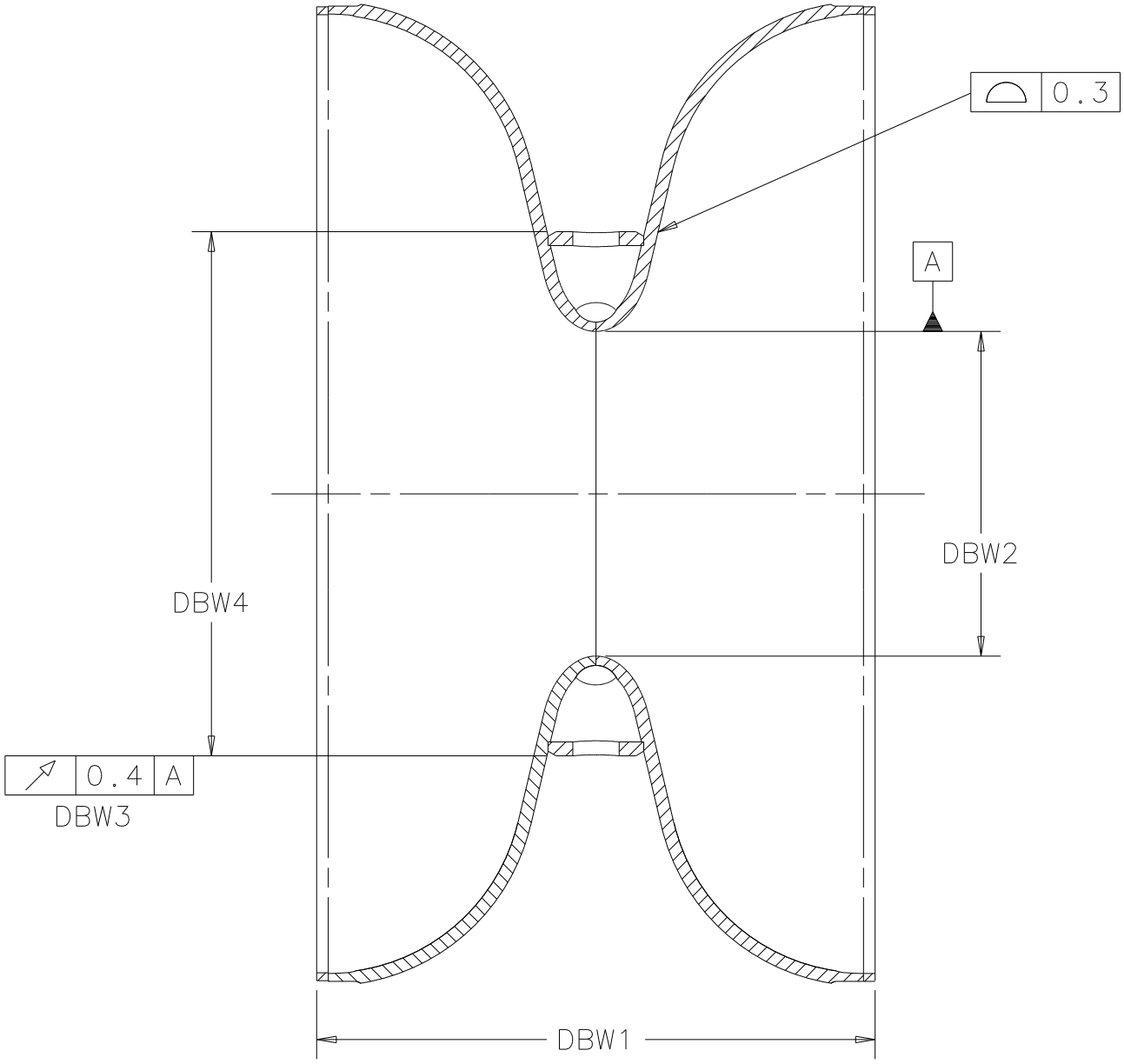

DIAMETER, FORM AND POSITION TOLERANCES ARE IN THE STRAINED CONDITION

UNLESS OTHERWISE SPECIFIED			ORIGINATOR	DESY	
.XX mm	.XXX in	ANGLE	DRAWN	E.PIRTLE	08-JUN-2005
±	±	±	CHECKED	M.FOLEY	28-SEP-2005
			APPROVED	M.FOLEY	28-SEP-2005

1. BREAK ALL SHARP EDGES MAX.
2. DO NOT SCALE DRAWING.
3. DIMENSIONS BASED UPON ASME Y14.5M-1994
4. MAX. ALL MACH. SURFACES √
5. DRAWING UNITS: METRIC

USED ON

MATERIAL

FERMI NATIONAL ACCELERATOR LABORATORY
UNITED STATES DEPARTMENT OF ENERGY

QUALITY CONTROL DRAWING
DESY 1.3GHZ TESLA RF CAVITY
MID HALF CELL

SCALE	DRAWING NUMBER	SHEET	REV
3:4	4904.010-MA-439329	1 OF 1	

CREATED WITH : Ideas11NXSeries | GROUP: ACCELERATOR MECH. SUPPT.

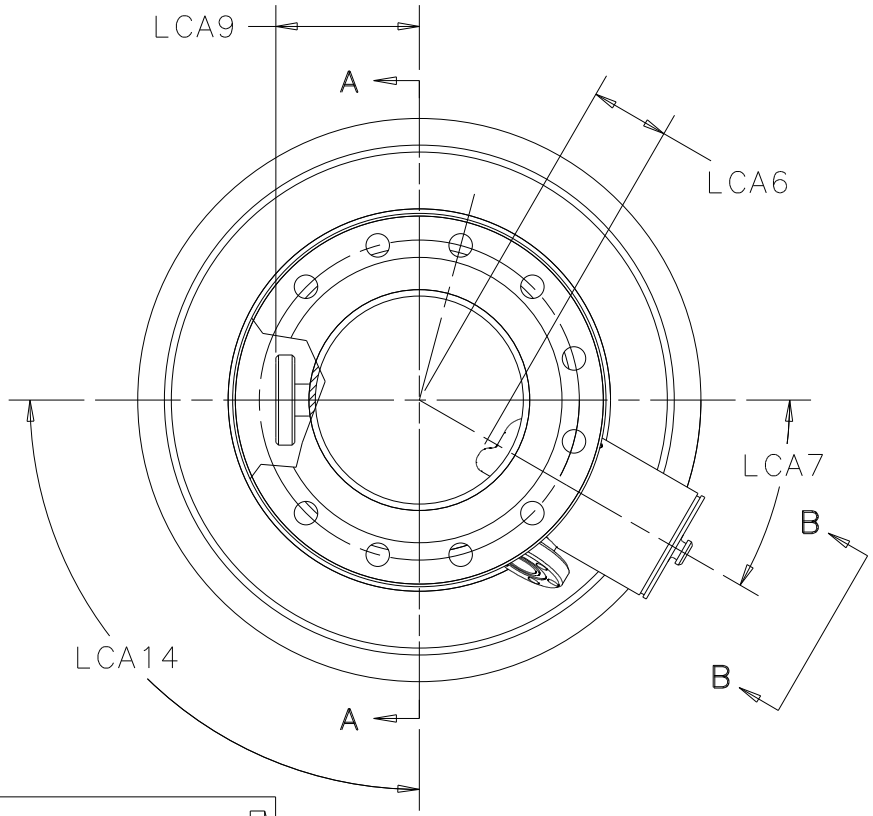

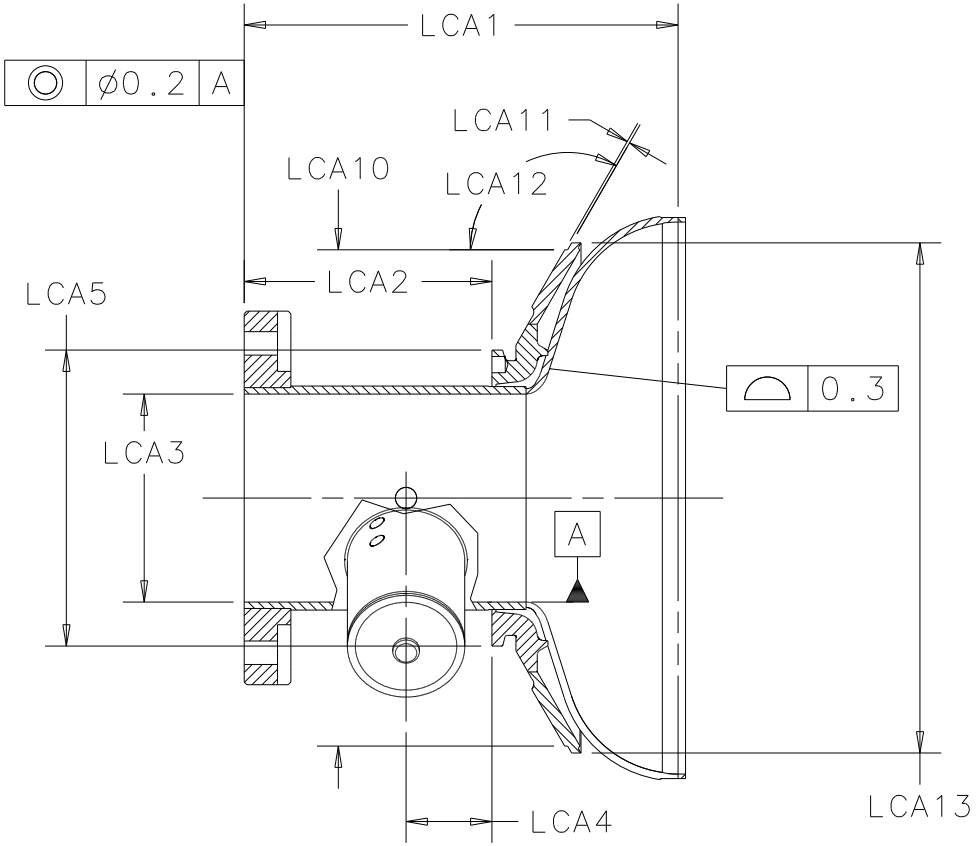

SECTION A-A

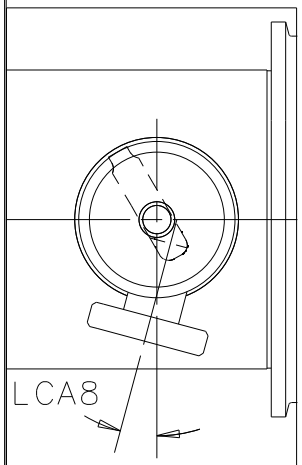

VIEW B-B

UNLESS OTHERWISE SPECIFIED			ORIGINATOR	M.FOLEY	24-OCT-2005
			DRAWN	E.PIRTLE	24-OCT-2005
±	±	±	CHECKED	M.FOLEY	25-OCT-2005
1. BREAK ALL SHARP EDGES MAX.			APPROVED	M.FOLEY	25-OCT-2005
2. DO NOT SCALE DRAWING. 3. DIMENSIONS BASED UPON			USED ON		
4. MAX. ALL MACH. SURFACES ✓			MATERIAL		
5. DRAWING UNITS:					

FERMI NATIONAL ACCELERATOR LABORATORY
UNITED STATES DEPARTMENT OF ENERGY

QUALITY CONTROL DRAWING
FNAL 1.3GHZ TESLA RF CAVITY
LONG END HALF CELL ASSEMBLY

SCALE	DRAWING NUMBER	SHEET	REV
3:8	4904.010-MA-440050	1 OF 1	

CREATED WITH : Ideas11NXSeries | GROUP: ACCELERATOR MECH. SUPPT.

3RD

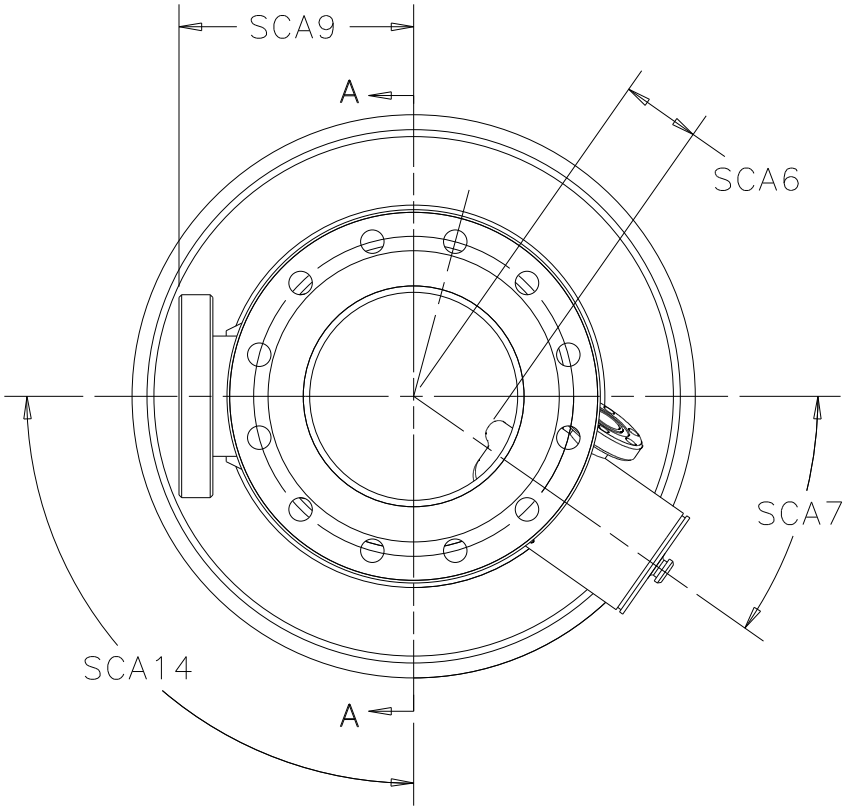

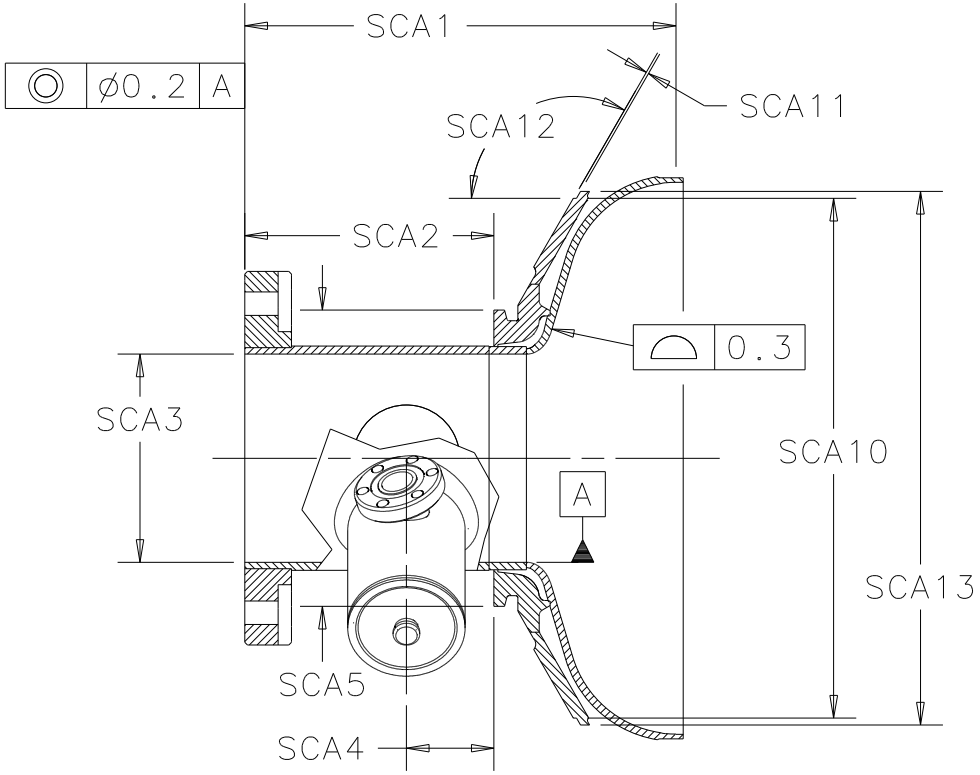

SECTION A-A

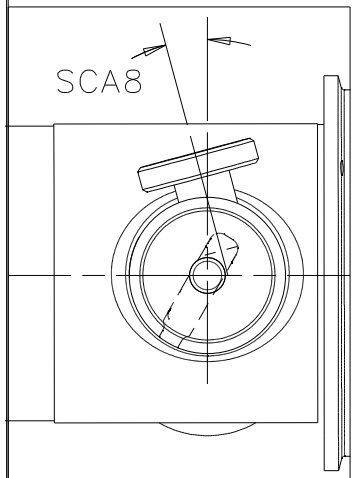

VIEW B-B

UNLESS OTHERWISE SPECIFIED			ORIGINATOR	DESY	
.XX mm	.XXX in	ANGLE	DRAWN	E.PIRTLE	09-JUN-2005
±	±	±	CHECKED	M.FOLEY	28-SEP-2005
1. BREAK ALL SHARP EDGES MAX. 2. DO NOT SCALE DRAWING. 3. DIMENSIONS BASED UPON ASME Y14.5M-1994 4. MAX. ALL MACH. SURFACES √ 5. DRAWING UNITS: METRIC			APPROVED	M.FOLEY	28-SEP-2005
			USED ON		
			MATERIAL		

FERMI NATIONAL ACCELERATOR LABORATORY
UNITED STATES DEPARTMENT OF ENERGY

QUALITY CONTROL DRAWING
DESY 1.3GHZ TESLA RF CAVITY
SHORT END HALF CELL ASSEMBLY

SCALE	DRAWING NUMBER	SHEET	REV
3:8	4904.010-MA-439331	1 OF 1	

CREATED WITH : Ideas11NXSeries | GROUP: ACCELERATOR MECH. SUPPT.

3RD

REV	DESCRIPTION	DRAWN	DATE
		APPROVED	DATE

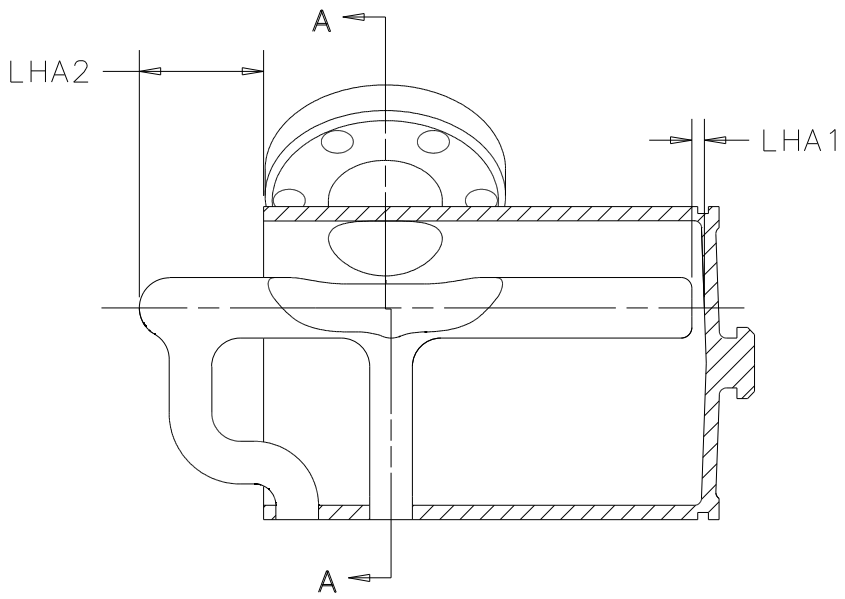

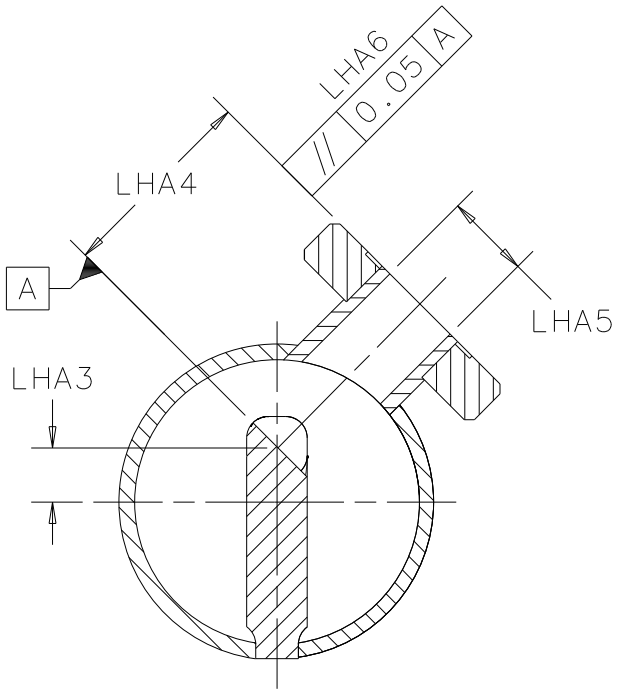

SECTION A-A

UNLESS OTHERWISE SPECIFIED			ORIGINATOR	DESY	
.XX mm	.XXX in	ANGLE	DRAWN	E.PIRTLE	09-JUN-2005
±	±	±	CHECKED	M.FOLEY	28-SEP-2005
1. BREAK ALL SHARP EDGES MAX.			APPROVED	M.FOLEY	28-SEP-2005
2. DO NOT SCALE DRAWING.			USED ON		
3. DIMENSIONS BASED UPON ASME Y14.5M-1994					
4. MAX. ALL MACH. SURFACES √			MATERIAL		
5. DRAWING UNITS: METRIC					

FERMI NATIONAL ACCELERATOR LABORATORY
UNITED STATES DEPARTMENT OF ENERGY

QUALITY CONTROL DRAWING
DESY 1.3GHZ TESLA RF CAVITY
LONG HOM ASSEMBLY

SCALE	DRAWING NUMBER	SHEET	REV
1:1	4904.010-MA-439368	1 OF 1	

3RD

CREATED WITH : Ideas11NXSeries | GROUP: ACCELERATOR MECH. SUPPT.

REV	DESCRIPTION	DRAWN	DATE
		APPROVED	DATE

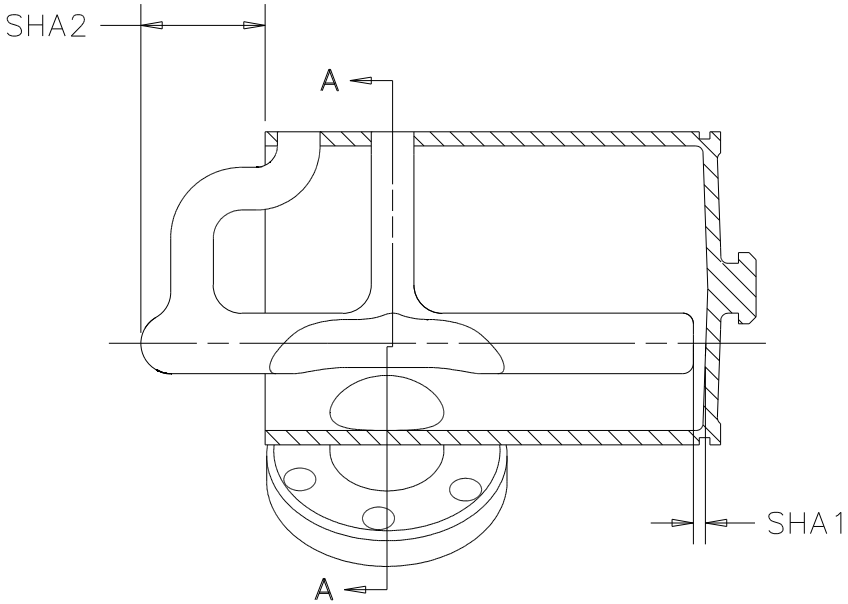

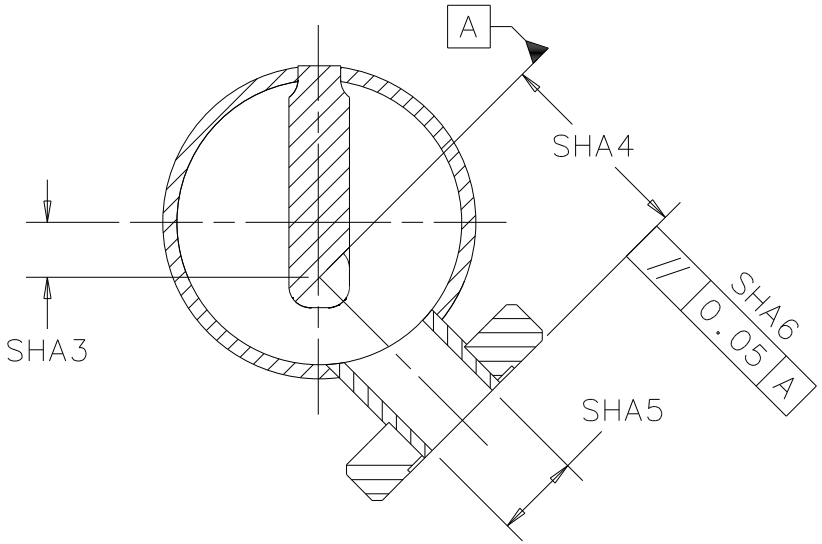

SECTION A-A

UNLESS OTHERWISE SPECIFIED			ORIGINATOR	DESY	
.XX mm	.XXX in	ANGLE	DRAWN	E.PIRTLE	09-JUN-2005
±	±	±	CHECKED	M.FOLEY	28-SEP-2005
1. BREAK ALL SHARP EDGES MAX.			APPROVED	M.FOLEY	28-SEP-2005
2. DO NOT SCALE DRAWING.			USED ON		
3. DIMENSIONS BASED UPON ASME Y14.5M-1994					
4. MAX. ALL MACH. SURFACES √			MATERIAL		
5. DRAWING UNITS: METRIC					

FERMI NATIONAL ACCELERATOR LABORATORY
UNITED STATES DEPARTMENT OF ENERGY

QUALITY CONTROL DRAWING
DESY 1.3GHZ TESLA RF CAVITY
SHORT HOM ASSEMBLY

SCALE	DRAWING NUMBER	SHEET	REV
1:1	4904.010-MA-439369	1 OF 1	

3RD

CREATED WITH : Ideas11NXSeries | GROUP: ACCELERATOR MECH. SUPPT.

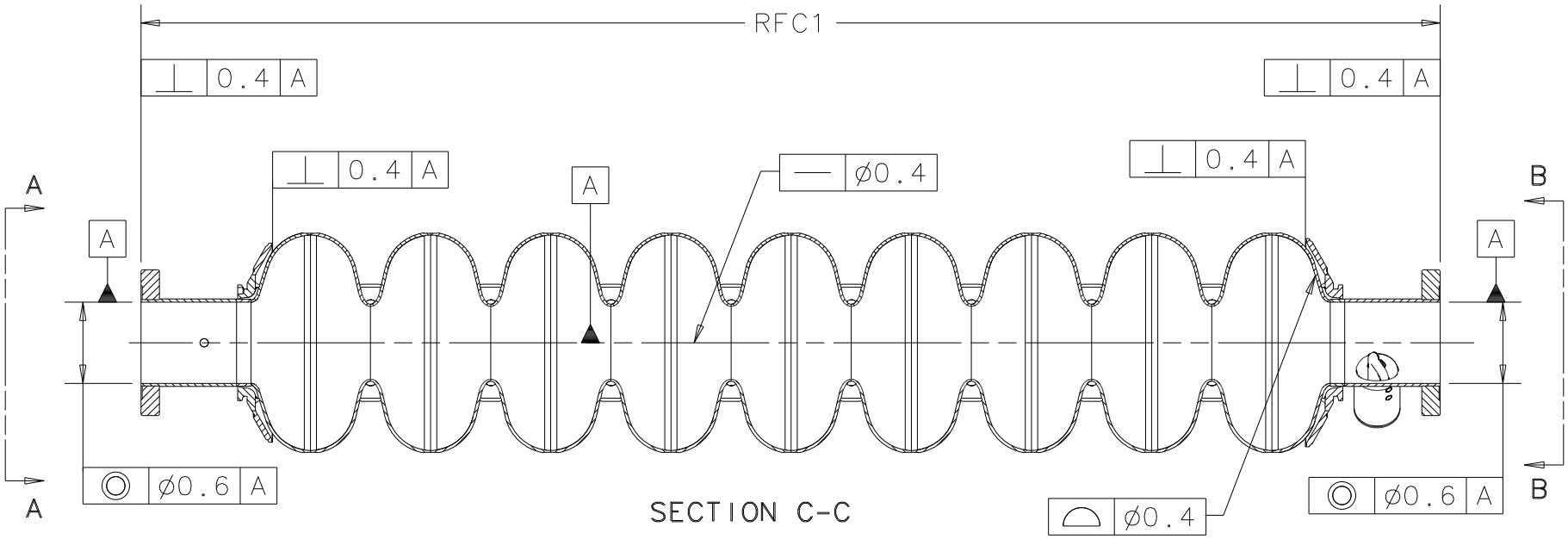

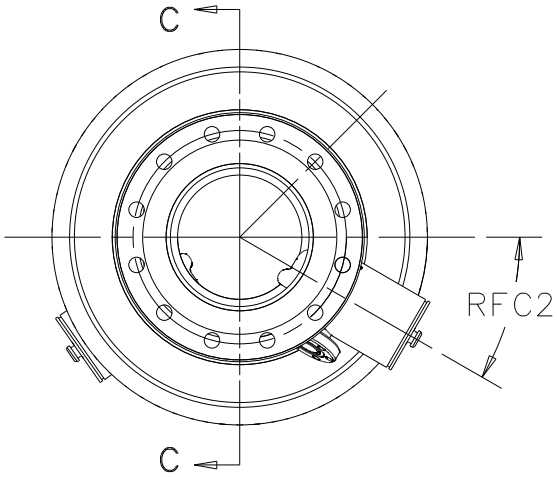

VIEW A-A

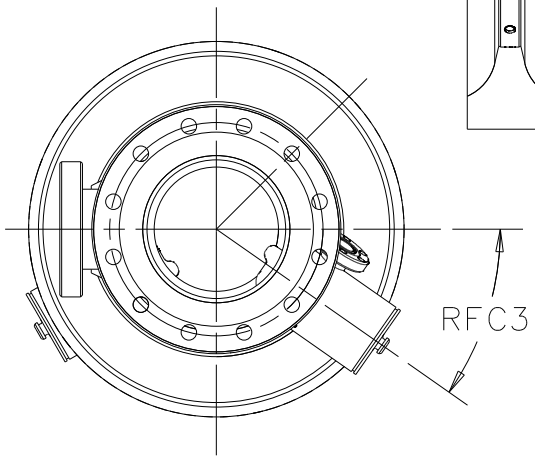

VIEW B-B

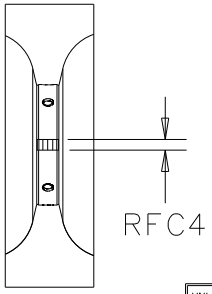

UNLESS OTHERWISE SPECIFIED			ORIGINATOR	M.FOLEY	24-OCT-2005
			DRAWN	E.PIRTLE	24-OCT-2005
±	±	±	CHECKED	M.FOLEY	25-OCT-2005
1. BREAK ALL SHARP EDGES MAX.			APPROVED	M.FOLEY	25-OCT-2005
2. DO NOT SCALE DRAWING. 3. DIMENSIONS BASED UPON			USED ON		
4. MAX. ALL MACH. SURFACES √			MATERIAL		
5. DRAWING UNITS:					

FERMI NATIONAL ACCELERATOR LABORATORY
UNITED STATES DEPARTMENT OF ENERGY

QUALITY CONTROL DRAWING
FNAL 1.3GHZ TESLA RF CAVITY
ASSEMBLY

SCALE	DRAWING NUMBER	SHEET	REV
	4904.010-MA-440051	1 OF 1	

3RD

CREATED WITH : Ideas11NXSeries | GROUP: ACCELERATOR MECH. SUPPT.